Titan Fuel Tanks 7030113 Installation Instructions

52 Gallon Mid-Ship Tank for Ram HD, 4WD

Part number: 7030113

trailfortress.com/titan-fuel-tanks-xxl-replacement-mid-ship-fuel-tank-52-gallon-7030113

Scan for fitment, price and install help

TITAN pt. no.: 03 0000 0145

CALIFORNIA NOTICE:



Important: Please read these instructions carefully and completely *before* starting the installation.

TITAN Fuel Tanks™

INSTALLATION GUIDE

Gen6





Extended Capacity Replacement Tanks for RAM Diesel Trucks

7030113 52 gallon (196 liters)* Fuel Tank *for **2013-2020** RAM Pickup truck models 2500 & 3500 : Crew Cab, Short Bed (6 ft. 4 in.)*

No drilling, cutting or fabrication is required for this installation.

Required Tools:

1 ea. Ratcheting socket driver
1 ea. 16 mm socket
1 ea. 12 inch long socket driver extension
1 ea. 7/16 inch socket
1 ea. 7/16 inch end wrench
1 ea. 9/16 inch socket
1 ea. 9/16 end wrench

Recommended Optional Tools:

1 ea. Hydraulic transmission jack
1 ea. Impact wrench
1 ea. Vehicle Lift

trailfortress.com/titan-fuel-tanks-xxl-replacement-mid-ship-fuel-tank-52-gallon-7030113

1 ea. 5/8 inch socket
1 ea. 5/8 inch end wrench
1 ea. ¾ inch socket
1 ea. ¾ inch end wrench
1 ea. Medium flat blade screwdriver
1 ea. Needle nose pliers
1 ea. Torque wrench handle for socket
1 ea. Mallet or small hammer

Generation 6

Tank Body Identification:

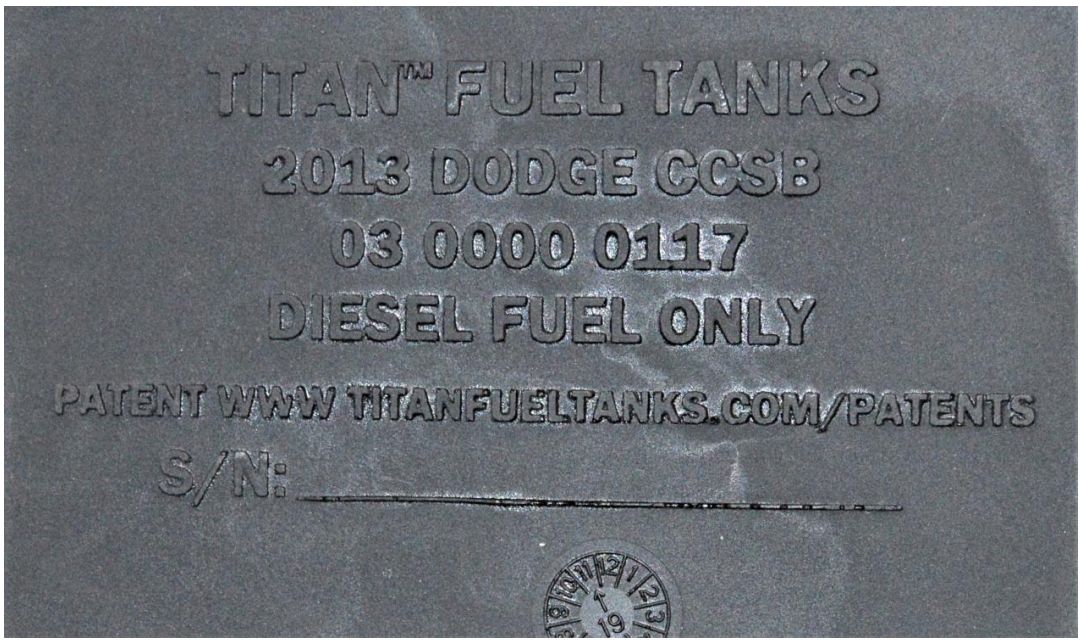

Note: *The tank body has the above identification on its bottom. Please check to be sure the tank is properly identified as the one to fit your vehicle. Notice the serial number space. You will need the serial number to register for warranty coverage.*

trailfortress.com/titan-fuel-tanks-xxl-replacement-mid-ship-fuel-tank-52-gallon-7030113

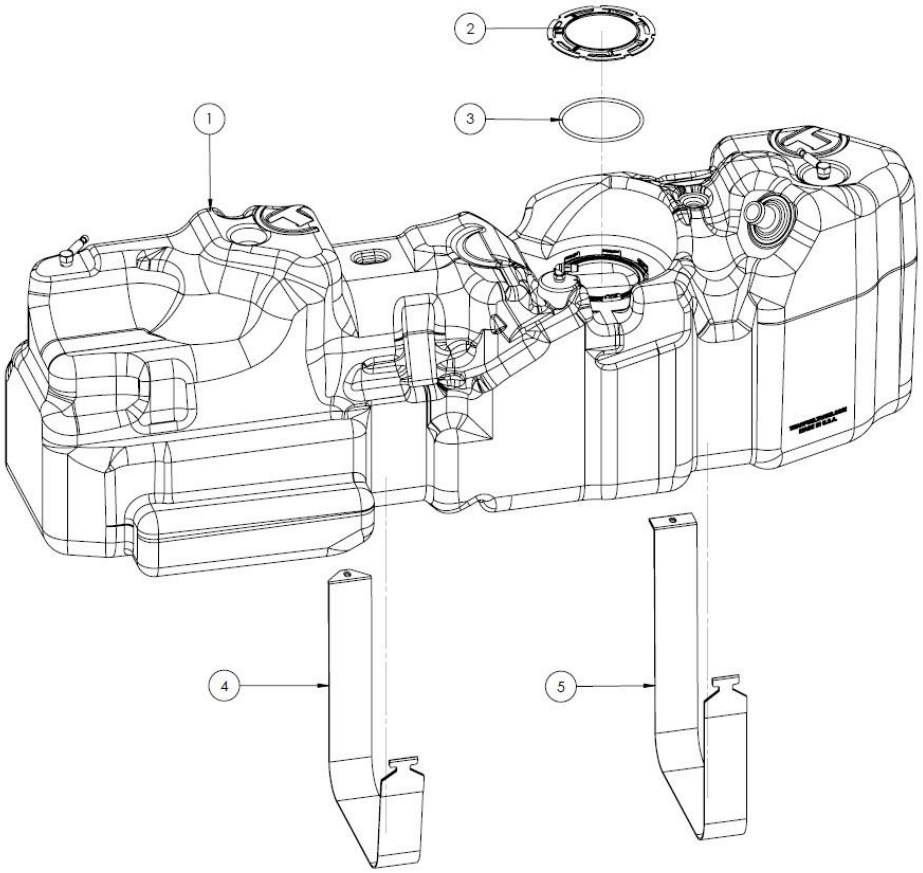

1	03 0000 0117	2013 Dodge CCSB Tank Body
2	98 0000 0403	TITAN Torque Ring™, Locking Top Ring
3	02 0000 0197	TITAN O-Ring
4	03 0000 0118F	2013 RAM CCSB Front Strap
5	03 0000 0118R	2013 RAM CCSB Rear Strap

trailfortress.com/titan-fuel-tanks-xxl-replacement-mid-ship-fuel-tank-52-gallon-7030113

SAFETY NOTICES

- Be sure to read this entire Installation Guide **before** beginning the installation of the new TITAN fuel tank or fuel system.
- At least a general automotive and mechanical knowledge is recommended to install a new TITAN tank or fuel system.
- TITAN designs its products for use on stock, Original Equipment Manufacturer (OEM) vehicles. TITAN cannot verify all aftermarket vehicle modifications. If the intended vehicle has had modifications to the chassis, suspension, fuel system, or cargo box please call TITAN Fuel Tanks™ before starting the installation.
- Always wear safety glasses
- Only work in a well-ventilated area.
- If any part of the installation requires lifting a heavy object, be sure to use proper lifting techniques.
- KEEP ANY OPEN FLAME OR HEAT SOURCE AWAY FROM THE INSTALLATION AREA.

NOTE: Take a moment and write the new TITAN™ Tank serial number in the back of this instruction booklet now. The serial number is found on the bottom of tank.

IMPORTANT NOTICE: *Before installation, be sure to thoroughly inspect inside of the tank for ANY foreign debris!*

I. Remove Original Equipment Tank

Step	Description
1	Using best, safe practices, place the vehicle on a hoist that leaves the entire underside of the frame *unobstructed.*

trailfortress.com/titan-fuel-tanks-xxl-replacement-mid-ship-fuel-tank-52-gallon-7030113

2 Drain all the fuel from the original equipment tank using a TITAN Fuel Caddy or siphon.
3 Remove the driver's side rear tire and fender liner to allow access to the vehicle's fill neck (See Fig. 1).
4 Disconnect the drive shaft from the rear axle. It is much easier to work in the fuel tank area with the shaft out of the way.
5 Remove original equipment tank side shield and bottom shield (if applicable) from vehicle.
6 Support the original equipment tank.
7 Loosen original equipment tank straps by undoing inside bolts first.
8 Disconnect the ¾" vent line hose and the larger fill hose from the fill neck, leaving them attached to the tank.
9 Disconnect the 5/16" vent line running from the fill neck to the rear of the stock (OEM) tank. This line will not be used on the new TITAN tank.
10 Disconnect fuel gauge electrical connection, feed line and return line from the sending unit. You can disconnect the short feed line from the vehicle and leave it on the sending unit if desired.
11 Remove the original equipment tank with its straps from the vehicle.
12 Make sure the wiring harness and differential breather hose (if applicable) are securely fastened to the vehicle frame as the new tank will need to be positioned next to the frame for its entire length.
13 Use a mallet and screwdriver or punch to loosen the locking top ring on the sending unit by tapping it and turning it counterclockwise (See Fig. 2). Remove the sending unit from the original equipment tank. Do NOT reuse factory O-Ring seal.
14 Remove fill hose and vent line hose from original equipment tank, they will be installed the same way on the new tank.



(Fig. 1) Remove driver's side rear wheel and fender liner.
.



(Fig. 2) Loosen locking top ring on original equipment tank by tapping counter-clockwise, remove and lift out sending unit.

trailfortress.com/titan-fuel-tanks-xxl-replacement-mid-ship-fuel-tank-52-gallon-7030113

II. Prepare Vehicle and Replacement Tank

Step Description

15 The new TITAN fuel tank comes with a new O-Ring to seal the sending unit. **The O-Ring is packaged in the envelope with the warranty registration.** Install the O-Ring as shown in Fig. 3.



(Fig. 3) O-Ring gasket shown installed correctly.



(Fig. 4) Line the sending unit tab up with the “TAB LOCATION” marking on the tank.

16 Before installing the sending unit into the TITAN Tank, BE SURE THE INSIDE OF THE TANK IS FREE OF DIRT OR DEBRIS OF ANY KIND. Carefully place the sending unit into the new TITAN tank. Make sure the O-ring gasket is placed properly under the sending unit to seal correctly.

17 After placing the sending unit into the tank on top of the O-ring gasket, rotate it until the sending unit tab is lined up with the “TAB LOCATION” marking on the tank’s top (See Fig. 4).

18 Place the provided TITAN Torque Ring, Locking Top ring on top of the sending unit and use a hammer and punch, or screwdriver to tap the ring clockwise until it is fully seated and locked (See Fig. 5). The short feed line may be installed on the sending unit at this time (See Fig. 5).

trailfortress.com/titan-fuel-tanks-xxl-replacement-mid-ship-fuel-tank-52-gallon-7030113



(Fig. 5) Using a hammer and punch, or screwdriver tighten the locking top ring clockwise. The short feed line is shown installed in photo.



(Fig. 6) Install fill and vent hoses from original equipment tank on TITAN tank as shown. Make sure that they are lined up with orientation marks on the tank.

19 Install the fill hose on the TITAN Tank King Nipple and the ¾" vent line hose on the ¾" elbow which is installed on top of the tank. Be sure all clamps are tight (See Fig. 6).

III. Install Replacement Tank in Vehicle

Step	Description
20	Place tank on a transmission jack. Lift the tank high enough to reconnect the sending unit electrical connection, as well as both the return, and feed lines. It will be necessary to remove the hose clip that holds the feed and return lines together near the sending unit (See Fig. 7).
22	Once all connections are securely attached, lift the tank the rest of the way into place with the jack.
23	Line the straps up with the strap indentations in the tank. The TITAN tank straps will reuse the original equipment mounting bolts. Hang the outboard side of the straps first. The straps will hang in "T" brackets outboard.
24	Attach the inboard sides of the straps while forming the straps around the tank. Tighten the bolts to factory specifications.
25	Attach the fill hose and the vent line hose to the vehicle's filler neck as they were with the original equipment tank.
26	Make sure ALL mounting hardware, clamps, bolts, etc. are properly installed and TIGHT. Double check it.

trailfortress.com/titan-fuel-tanks-xxl-replacement-mid-ship-fuel-tank-52-gallon-7030113

27 Reconnect the drive shaft to the rear axle.
28 Reinstall the fender liner and the rear tire and wheel.

29 Lower vehicle, fill tank with diesel fuel and check for leaks. IMPORTANT!



(Fig. 7) Remove the hose clip from the lines leading to the sending unit. Clip shown above.



Installation Complete!

trailfortress.com/titan-fuel-tanks-xxl-replacement-mid-ship-fuel-tank-52-gallon-7030113



Small indent mark on the bottom of the tank indicates the optimal spot for sump installation of an aftermarket “performance” fuel pump system

Go to TITAN’s website to view video installation instructions and tips.

Be sure to return the completed warranty registration for your new Titan fuel tank; or you can register on-line at www.titanfueltanks.com

You will find your tank’s serial number on the bottom of the tank.

Write your tank’s Serial Number here:________

A product must be registered within sixty (60) days of receipt for the warranty to be valid. Other conditions may apply. Consult TITAN’s full warranty for details.

*All capacities are approximate.

Warranty is void if product is improperly installed.

For questions or customer service call (800) 728-4982

trailfortress.com/titan-fuel-tanks-xxl-replacement-mid-ship-fuel-tank-52-gallon-7030113

TITAN Fuel Tanks™
P.O. Box 2225
Idaho Falls, ID 83403 USA
Telephone (208) 522-1325, FAX (208) 529-2162
www.titanfueltanks.com

For patent information: http://titanfueltanks.com/patents

TITAN Fuel Tanks are PROUDLY MADE IN THE USA!

©2022 Supertanks, LLC. All rights reserved.

trailfortress.com/titan-fuel-tanks-xxl-replacement-mid-ship-fuel-tank-52-gallon-7030113