TRAIL FORTRESS

BUILT FOR THE TRAIL. CHECKED FOR YOUR TRUCK.

Titan Fuel Tanks 7021211 Installation Instructions

60 Gallon Mid-Ship Tank for Ford Super Duty

Part number: 7021211

trailfortress.com/titan-fuel-tanks-xxl-replacement-mid-ship-fuel-tank-60-gallon-7021211

Scan for fitment, price and install help

TITAN pt. no.: 02 0000 0263

CALIFORNIA WARNING:



Important: Please read these instructions carefully and completely *before* starting the installation.

TITAN Fuel Tanks™

INSTALLATION GUIDE

Gen6





Extended Capacity Replacement Tanks for FORD Diesel Trucks

7021211 60 gallon (227 liters)* Fuel Tank *for **2011-2016** FORD truck models F250 & F350 : Crew Cab, Short Bed (6 ½ ft.)*

No drilling, cutting or fabrication is required for this installation.

Required Tools:

1 ea. Ratcheting socket driver
1 ea. 13 mm socket
1 ea. 12 inch long socket driver extension
1 ea. 13 mm end wrench
1 ea. 5/8 inch socket
1 ea. 9/16 end wrench
1 ea. Medium flat blade screw driver

Recommended Optional Tools:

1 ea. Hydraulic transmission jack
1 ea. Vehicle hoist
1 ea. Impact wrench

trailfortress.com/titan-fuel-tanks-xxl-replacement-mid-ship-fuel-tank-60-gallon-7021211

1 ea. Large flat blade screw driver or punch
1 ea. Needle nose pliers
1 ea. Torque wrench handle for socket
1 ea. Mallet or small hammer
1 ea. Razor blade or sharp bladed knife.

Generation 6

Tank Body Identification:

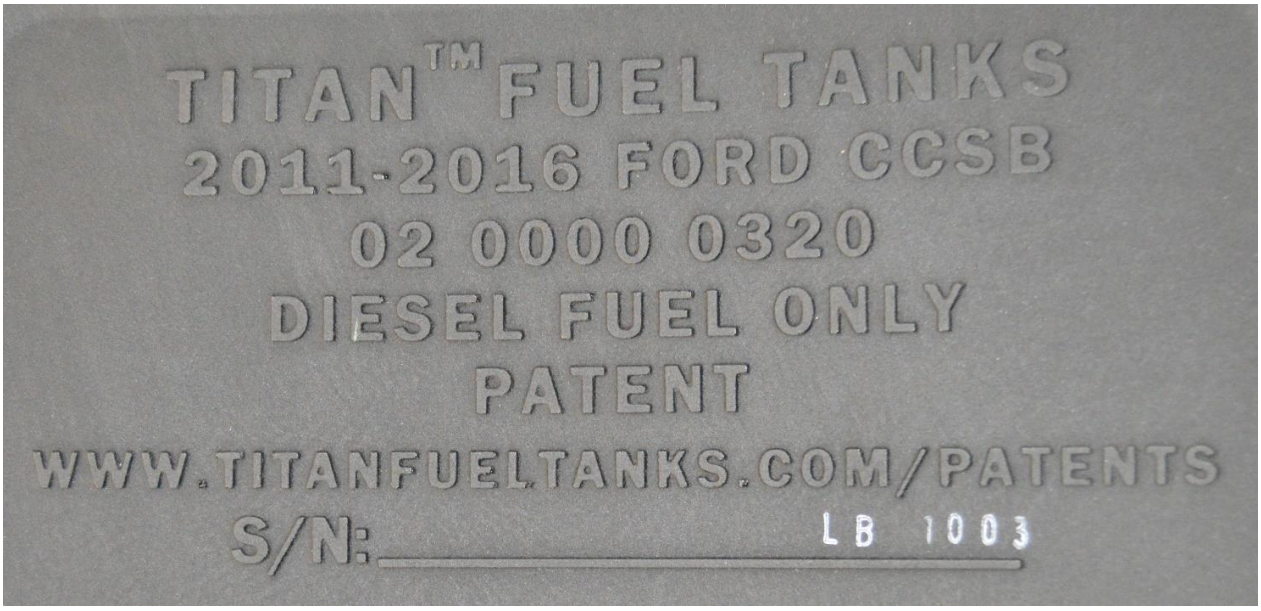

Note: *The tank body has the above identification on its bottom. Please check to be sure the tank is properly identified as the one to fit your vehicle.*

trailfortress.com/titan-fuel-tanks-xxl-replacement-mid-ship-fuel-tank-60-gallon-7021211

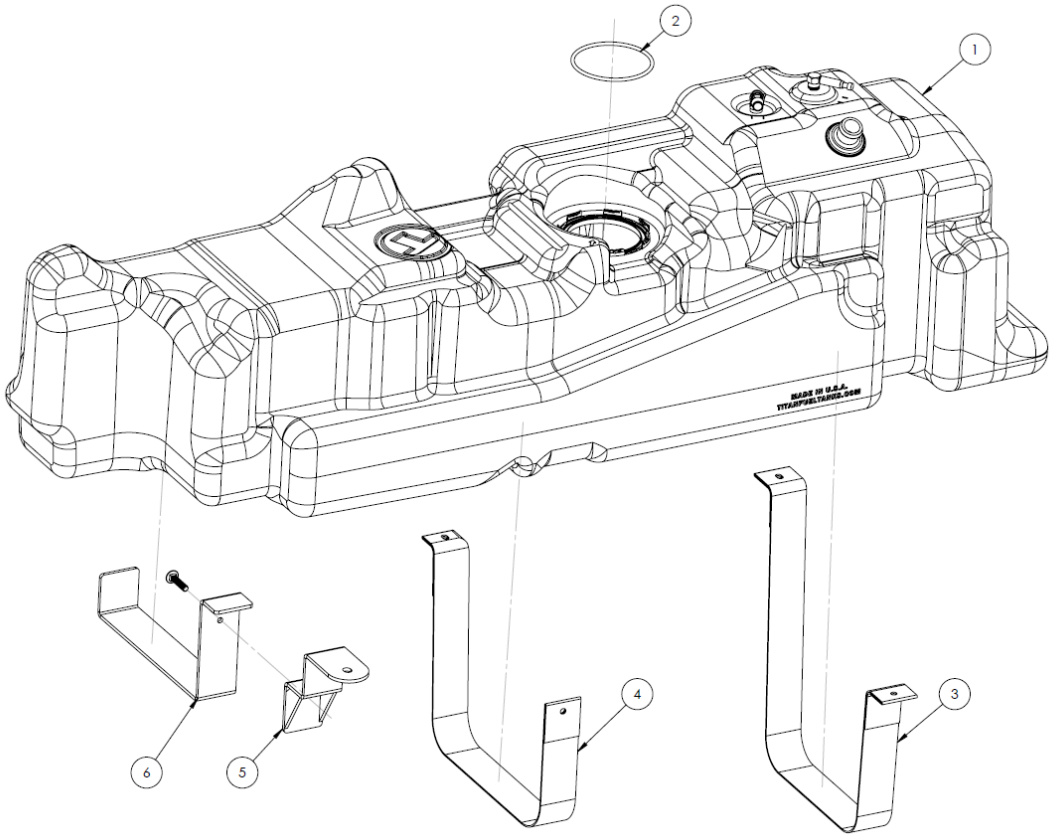

1	1 ea. 02 0000 0320 1 ea. 02 0000 0112	Tank Body, with rollover valve **&** ½" NPT x ¾" x 90 elbow (installed in top of tank by fill hose king nipple, **extra in warranty envelope**)	
2	1 ea. 02 0000 0197	TITAN Gen6 O-Ring (packaged in warranty envelope)	
3	1 ea. *Rear Tank Strap:*	*02 0117 0000 / 02 0000 0467*	*Long Strap*
4	1 ea. *Front Tank Strap:*	*02 0117 0000 / 02 0000 0467*	*Short Strap*
5 & 6	1 ea. 02 0118 0000	FORD, Front Tank Support Assembly, CC Short/Long Bed, 2011(Included complete in 22"x10"x4" box)	

trailfortress.com/titan-fuel-tanks-xxl-replacement-mid-ship-fuel-tank-60-gallon-7021211

SAFETY NOTICES

- Be sure to read this entire Installation Guide **before** beginning the installation of the new TITAN fuel tank or fuel system.
- At least a general automotive and mechanical knowledge is recommended to install a new TITAN tank or fuel system.
- TITAN designs its products for use on stock, Original Equipment Manufacturer (OEM) vehicles. TITAN cannot verify all aftermarket vehicle modifications. If the intended vehicle has had modifications to the chassis, suspension, fuel system, or cargo box please call TITAN Fuel Tanks™ before starting the installation.
- Always wear safety glasses
- Only work in a well-ventilated area.
- If any part of the installation requires lifting a heavy object, be sure to use proper lifting techniques.
- KEEP ANY OPEN FLAME OR HEAT SOURCE AWAY FROM THE INSTALLATION AREA.

NOTE: Take a moment and write the new TITAN™ Tank serial number in the back of this instruction booklet now. The serial number is found on the bottom of tank.

IMPORTANT NOTICE: *Before installation, be sure to thoroughly inspect inside of the tank for ANY foreign debris!*

I. Remove Original Equipment Tank

Step	Description
1	Using best, safe practices, place the vehicle on a hoist that leaves the entire underside of the frame *unobstructed.*

trailfortress.com/titan-fuel-tanks-xxl-replacement-mid-ship-fuel-tank-60-gallon-7021211

2 Drain all the fuel from the original equipment tank using a TITAN Fuel Caddy or siphon.
3 Remove original equipment tank plastic side shield and bottom shield (if applicable) from vehicle.
4 Disconnect the ¾" vent line hose and the larger fill hose from the fill neck, leaving them attached to the tank.
5 Disconnect fuel gauge electrical connection, feed line and return line from the sending unit.
6 Support the original equipment tank.
7 Loosen original equipment tank straps by undoing inside bolts first.
8 Remove the original equipment tank with its straps from the vehicle.
9 Remove original equipment "bumper bracket", located to the right of the front strap, (See Fig. 1) from vehicle.
10 Make sure the wiring harness and differential breather hose (if applicable) are securely fastened to the vehicle frame as the new tank will need to be positioned next to the frame for its entire length.
11 Use a mallet and screw driver or punch to loosen the hold-down ring on the sending unit by tapping it and turning it counter-clockwise (See Fig. 2). Remove the sending unit from the original equipment tank. Do NOT reuse factory O-Ring seal. Save the factory hold-down ring for use on the new TITAN tank.
12 Remove fill hose and vent line hose from original equipment tank, they will be installed the same way on the new tank.



(Fig. 1) Remove original equipment strap and "bumper bracket", shown here to the right-hand side of the front strap.



(Fig. 2) Loosen hold-down ring on original equipment tank by tapping counter-clockwise, remove and lift out sending unit.

trailfortress.com/titan-fuel-tanks-xxl-replacement-mid-ship-fuel-tank-60-gallon-7021211

II. Prepare Vehicle and Replacement Tank

Step Description

13 The new TITAN fuel tank comes with a new O-Ring to seal the sending unit. **The O-Ring is packaged in the envelope with the warranty registration.** Install the O-Ring as shown in Fig. 3.



(Fig. 3) O-Ring gasket shown installed correctly.



(Fig. 4) Line the sending unit tab up with the tab location arrow marking on the tank.

14 Carefully place the sending unit into the new TITAN tank. Make sure the O-ring gasket is placed properly under the sending unit to seal correctly. Before installing the sending unit into the TITAN Tank, BE SURE THE INSIDE OF THE TANK IS FREE OF DIRT OR DEBRIS OF ANY KIND.

15 After placing the sending unit into the tank on top of the O-ring gasket, rotate it until the sending unit tab is lined up with the tab location arrow marking on the tank's top (See Fig. 4).

16 Place the factory (OEM) hold-down ring on top of the sending unit and use a hammer and punch, or screw driver to tap the ring clockwise until it is fully seated and locked (See Fig. 5).

trailfortress.com/titan-fuel-tanks-xxl-replacement-mid-ship-fuel-tank-60-gallon-7021211



(Fig. 5) Using a hammer and punch, or screw driver to tighten the hold-down ring clockwise.



(Fig. 6) Install fill and vent hoses from original equipment tank on TITAN tank as shown. Make sure that ¾" vent line is lined up with orientation mark on the tank.

17 Install the fill hose on the TITAN Tank King Nipple and the ¾" vent line hose on the ¾" elbow which is installed on top of the tank. Be sure all clamps are tight (See Fig. 6).

III. Install Replacement Tank in Vehicle

Step Description

18 The TITAN tank straps will reuse the original equipment mounting bolts. Hang the outboard side of the straps first. The rear strap will attach to the underside of the frame and the front strap will attach to the outside. Start the stock bolt and make sure at least ½ of the thread is through. Leave the bolt loose.

19 Place tank on a transmission jack. Lift the tank high enough to reconnect the sending unit electrical connection, as well as both the return, and feed lines. Line the straps up with the strap indentations in the tank.

20 Once all connections are securely attached, lift the tank the rest of the way into place with the jack.

21 Attach the inboard sides of the straps. Tighten the bolt and bracket to factory specifications.

22 The "02 0118 0000 FORD, Front Tank Support Assembly" supports the front of the tank. It is made up of two major pieces: an upper and a lower. Hang the lower piece on the inside bottom lip of the vehicle's frame. Slide it toward the rear of the vehicle until it lines up with the closest cab mount. Loosen the bolt from the cab mount and complete installation of the upper piece as shown in Figs. 7-12. A short video showing the proper installation of the "Front Tank Support Assembly" can be viewed on TITAN's website at: http://titanfueltanks.com/installation entitled "Front Support on FORD Tanks".

trailfortress.com/titan-fuel-tanks-xxl-replacement-mid-ship-fuel-tank-60-gallon-7021211



(Fig. 7) Hang lower piece of support assembly on lower lip of vehicle frame and slide towards the rear of vehicle until it lines up with cab mount.



(Fig. 8) Place the supplied fender washer into the center of the rubber cab mount above the upper piece of the assembly.



(Fig. 9) Mount the upper piece of the assembly to the lower piece using bolt provided.



(Fig. 10) Replace cab mount bolt with its existing washers and tighten to factory specification.

trailfortress.com/titan-fuel-tanks-xxl-replacement-mid-ship-fuel-tank-60-gallon-7021211



(Fig. 11) Completed front support installation and tank.

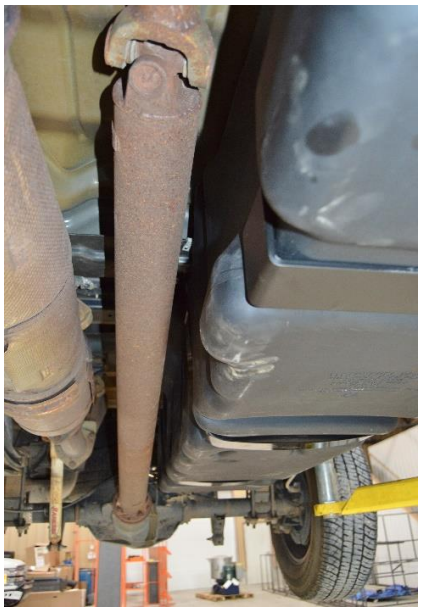

(Fig. 12) Installed front support on tank.



Installation Complete!

23 Attach the fill hose and the vent line hose to the vehicle's filler neck as they were with the original equipment tank .

24 Make sure ALL mounting hardware, clamps, bolts, etc. are properly installed and TIGHT. Double check it.

25 Lower vehicle, <u>fill tank with diesel fuel and</u> <u>check for leaks.</u> IMPORTANT!



Underside view of TITAN 2011-2016 CC Short-Bed tank (7021211) installed.

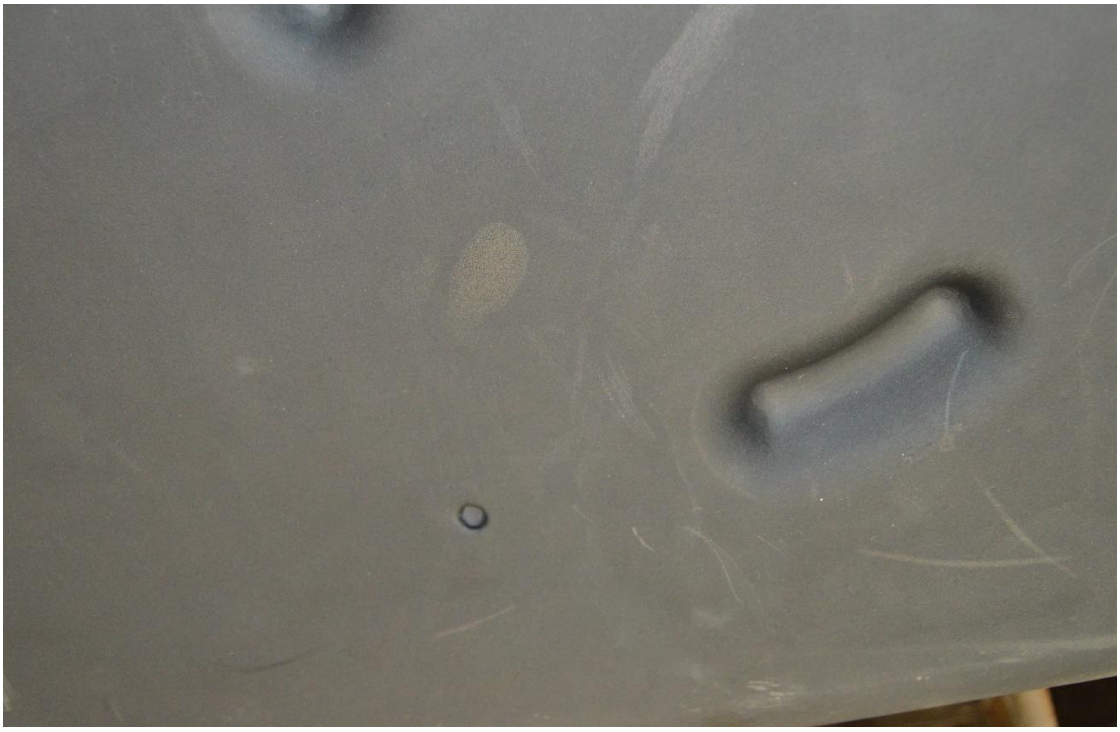

Small indent mark on the bottom of the tank indicates the optimal spot for sump installation of an aftermarket “performance” fuel pump system.

Go to TITAN’s website to view video installation instructions and tips.

Be sure to return the completed warranty registration for your new Titan fuel tank; or you can register on-line at www.titanfueltanks.com

You will find your tank's serial number on the bottom of the tank.

Write your tank's Serial Number here:_____

A product must be registered within sixty (60) days of receipt for the warranty to be valid. Other conditions may apply. Consult TITAN's full warranty for details.

*All capacities are approximate.

Warranty is void if product is improperly installed.

For questions or customer service call (800) 728-4982

TITAN Fuel Tanks™
P.O. Box 2225
Idaho Falls, ID 83403 USA
Telephone (208) 522-1325, FAX (208) 529-2162
www.titanfueltanks.com

For patent information: http://titanfueltanks.com/patents

TITAN Fuel Tanks are PROUDLY MADE IN THE USA!

Revised 9.11.23 ©2023 Supertanks, LLC. All rights reserved.

trailfortress.com/titan-fuel-tanks-xxl-replacement-mid-ship-fuel-tank-60-gallon-7021211