TRAIL FORTRESS

BUILT FOR THE TRAIL. CHECKED FOR YOUR TRUCK.

Titan Fuel Tanks 7010519 Installation Instructions

43 Gallon Mid-Ship Tank for GM 1500 Trucks

Part number: 7010519

trailfortress.com/titan-fuel-tanks-xxl-replacement-mid-ship-fuel-tank-43-gallon-7010519

Scan for fitment, price and install help

TITAN pt. no.: 01 0000 0768

TITAN Fuel Tanks

7010519 Installation Instructions





7010519: 43* Gallon (162* liters) Replacement Tank for 2019+ GM 1500 Crew Cab, Short & Standard Bed Duramax Diesel.

Important: Please read these instructions carefully and completely *before* starting the installation.

trailfortress.com/titan-fuel-tanks-xxl-replacement-mid-ship-fuel-tank-43-gallon-7010519

7010519: GM 1500 Crew Cab, Short & Standard Bed Duramax Diesel Identification and Parts List:

1ea. Extra heavy-duty, 43* gallon, cross-linked polyethylene (XLHDPE) fuel tank.

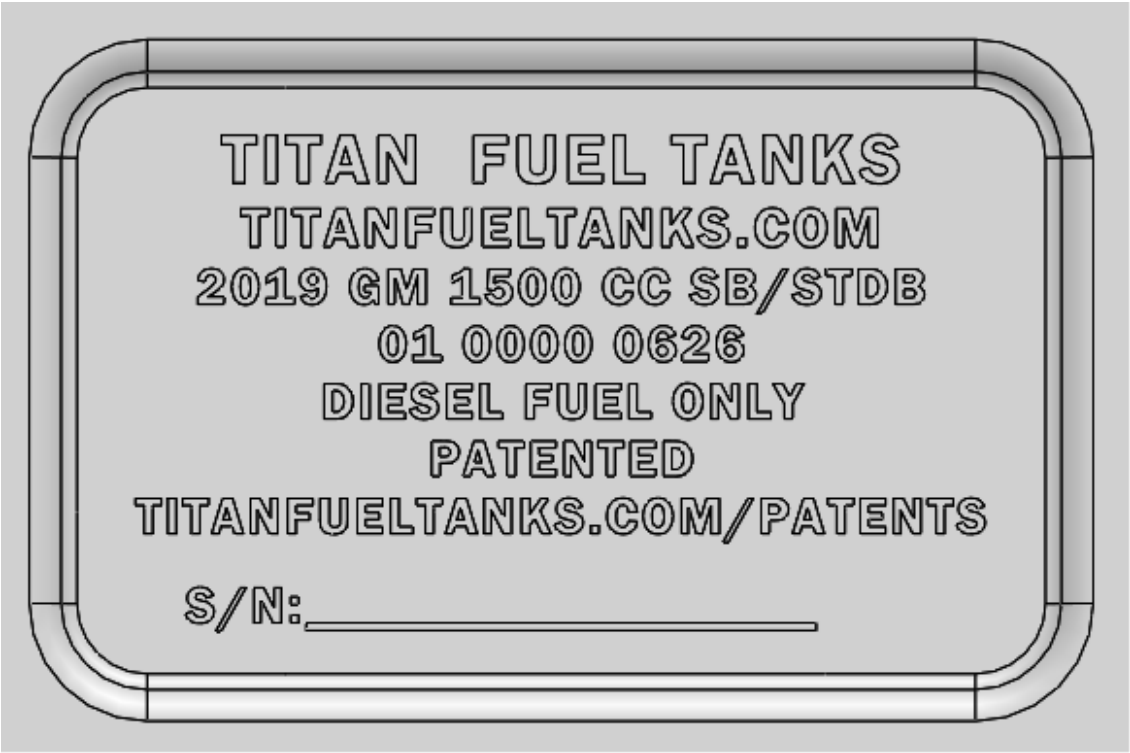

Note: *Each tank has the above identification on its bottom. Please check to be sure the tank is properly identified as the one to fit your vehicle.*

Part Number	Description	Quantity
01 0000 0626	2019+ GM 1500 Tank Body	1
02 0000 0197	135mm ID X 6mm CS O-Ring, 70 Dur, Bright Orange	1
99 0186 0000	Rollover Valve Assembly	1
99 0000 0785	1/2" NPT to 5/8" Hose Barb Adapter Elbow, Kynar	1
01 0000 0627	2019 GM 1500 CCSB, CCSTB Strap Set (F/R)	1
99 0000 0185	TITAN™ Warranty Envelope	1
01 0129 0000	2019 GM 1500 Install Kit	1
01 0000 0767	2019 GM 1500 CCSB, CCSTB Front Support (Top, Bottom, Side)	1
99 0000 0610	3/8"-16 x 1" Hex Bolt, Grd 5, Zinc	3
99 0000 0782	3/8"-16 x 1.25" Cap Screw, Grd 8	1
99 0000 0682	3/8" Washer, SAE	8
99 0000 0451	3/8"-16 Nylon Locknut, Grd 8	4

trailfortress.com/titan-fuel-tanks-xxl-replacement-mid-ship-fuel-tank-43-gallon-7010519

99 0000 0836	1/4"-20 x 1.5" cap Screw, Grd 5	1
99 0000 0718	1/4-20 Nylon Locknut, Grd 2, Zinc	1
01 0000 0766	Backflow Prevention Valve	1
01 0000 0624	5/8" Hose Barb Equal Tee, Nylon	1
01 0000 0769	5/8" ID Fuel Hose, 26"	1
99 0000 0106	1/2"-1.25" Worm Drive Ring Clamp	4
99 0132 0000	Adaptive Ride Control Spacer Bracket (See note at end of instructions)	1

IMPORTANT NOTICE: Before installation, be sure to thoroughly inspect inside of the tank for ANY foreign debris!

I. Remove Original Equipment Tank

Step Description

1 Place the vehicle on a hoist that leaves the entire underside of the frame unobstructed.

2 Drain all the fuel from the original equipment (OEM) tank using a TITAN Fuel Caddy, pump or siphon.

3 Remove OEM tank plastic shield or shell (if applicable) from vehicle.

4 Support the OEM tank.

5 Disconnect the fill hose and vent line from fill port.

6 Disconnect fuel lines at the front of the OEM tank. Leave fuel lines in place, for the moment, on top of OEM tank.

trailfortress.com/titan-fuel-tanks-xxl-replacement-mid-ship-fuel-tank-43-gallon-7010519



7 Loosen and remove OEM tank straps by undoing the bolts at outside of tank and unhook straps on the inside and lower tank a few inches.

8 Disconnect fuel gauge electrical connection from sending unit.

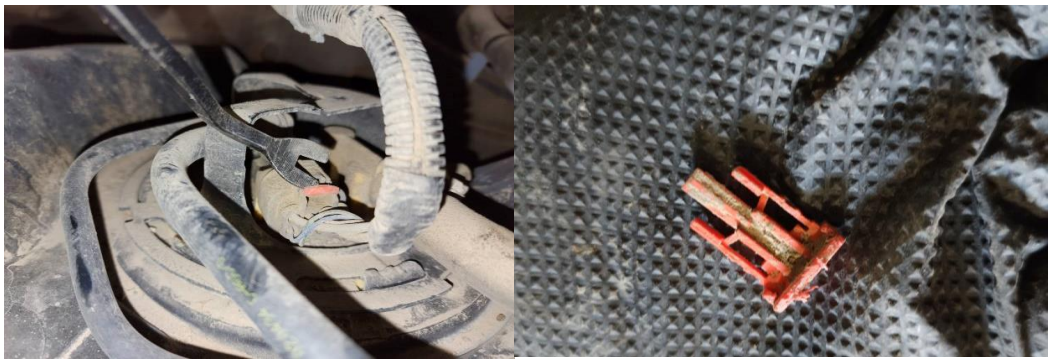

9 Remove the OEM tank from the vehicle.

II. Prepare Vehicle and Replacement Tank

Step Description

10 Use a mallet and screwdriver or punch to loosen the OEM hold-down ring on the sending unit by tapping it and turning it counter-clockwise
Remove the sending unit from the OEM tank. Do NOT reuse factory O-ring seal.

trailfortress.com/titan-fuel-tanks-xxl-replacement-mid-ship-fuel-tank-43-gallon-7010519

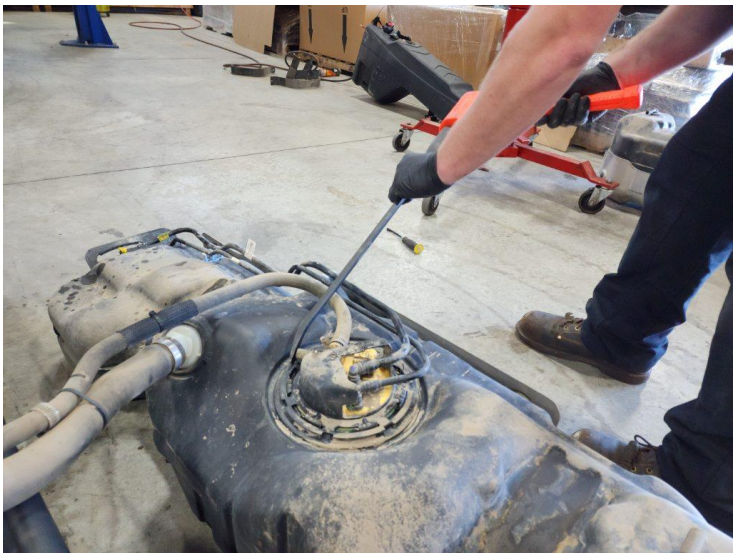

11 The new TITAN fuel tank comes with the sending unit O-ring gasket packaged separately or included in the envelope with the instructions. Place the new O-ring into the gland (groove) on the new tank.

12 Carefully place the sending unit and attached fuel lines into the new TITAN replacement tank. Make sure the O-ring gasket is placed properly under the sending unit to seal correctly. Before installing the sending unit into the replacement tank, be sure the inside of the tank is free of dirt or debris of any kind.



13 Make sure the tab on the sending unit is lined up with the “Tab Location” mark on the TITAN tank.

14 Place the original equipment, top hold-down ring onto the lugs and the sending unit and turn it clockwise as far as it will go.



15 Lay the fuel lines into the fuel line groove provided in the top of the replacement tank.



trailfortress.com/titan-fuel-tanks-xxl-replacement-mid-ship-fuel-tank-43-gallon-7010519

16 Locate the vent line attached to the sending unit. Cut the line 8” from the end that connects to the sending unit. Remove 1” of hose from the fill spout side and insert the barbed tee (01 0000 0624). It is best to cut the vent tube with standard hose cutters. Tighten included hose clamps accordingly.

17 Attach 26" of 5/8" hose included in the 01 0129 0000 7010519 Install Kit to the previously installed tee and tighten the hose clamp accordingly. Leave hanging for now.



18 Insert 1-1/2” Fill Pipe ICV into the tank side of the fill hose. The “Flow” arrow will need to be pointing towards the fuel tank. This will need to be inserted deep enough to allow the fill hose to fit completely over the king nipple.

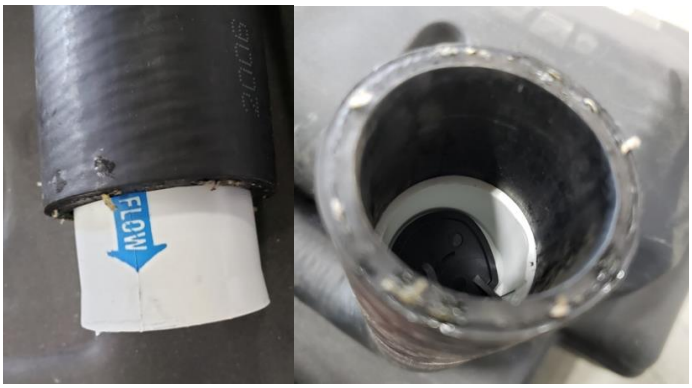

III. Install Replacement Tank in Vehicle

Step	Description

19 Remove fuel line bracket from frame cross support and fuel line tree connectors. These tree connectors will be connected to the Titan front support in the next step.



20 Install tank front support according to the images below. The short bed configuration will have the front support pointing towards the front of the truck. The standard bed configuration will have it pointing towards the rear.

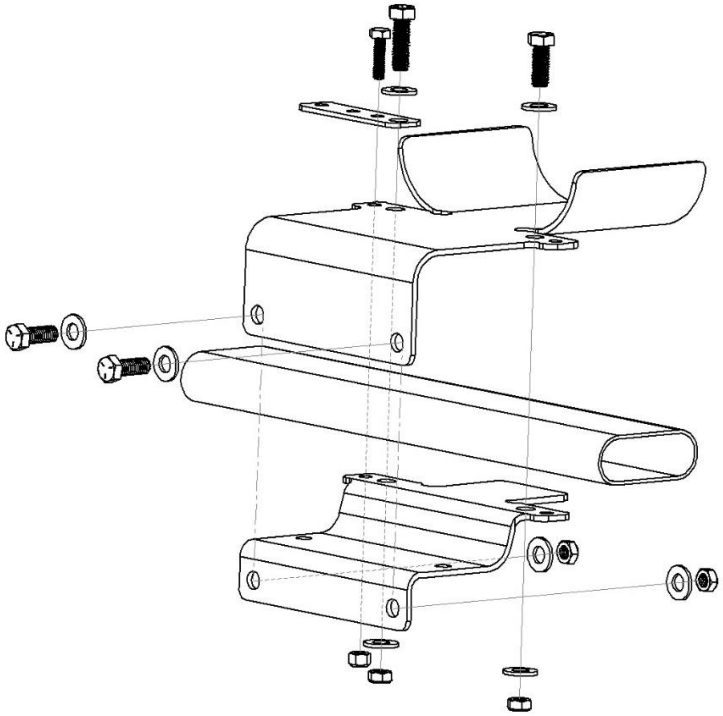

Short Bed:

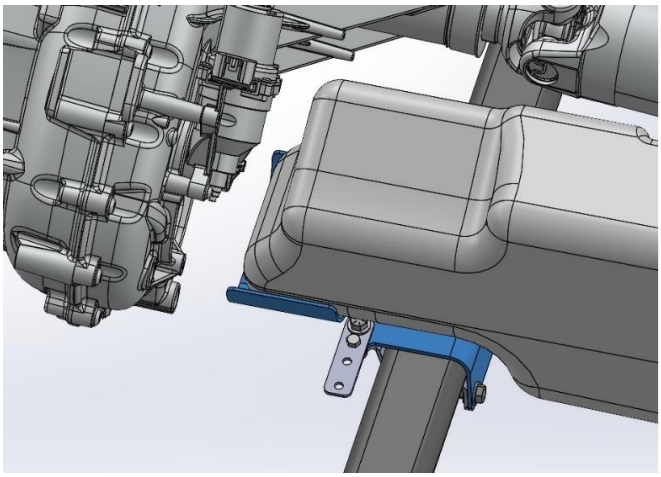

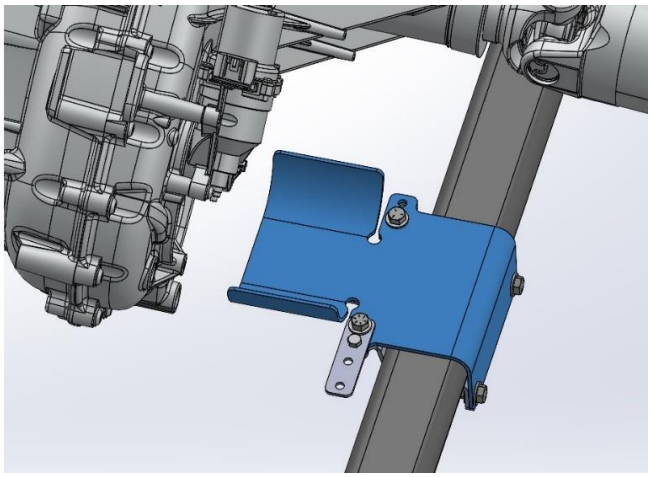

Standard Bed:

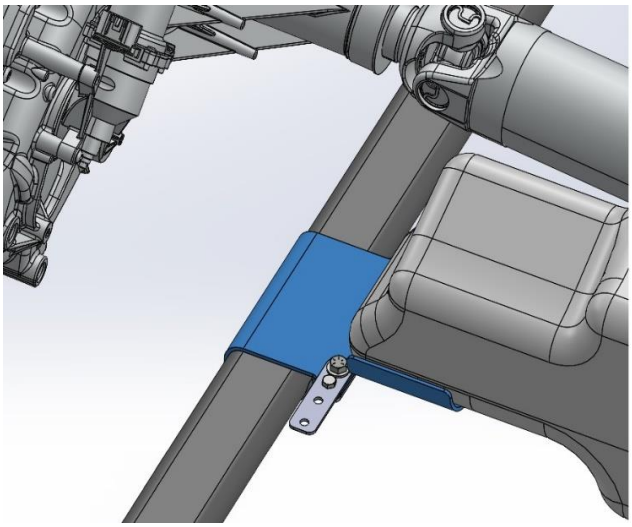

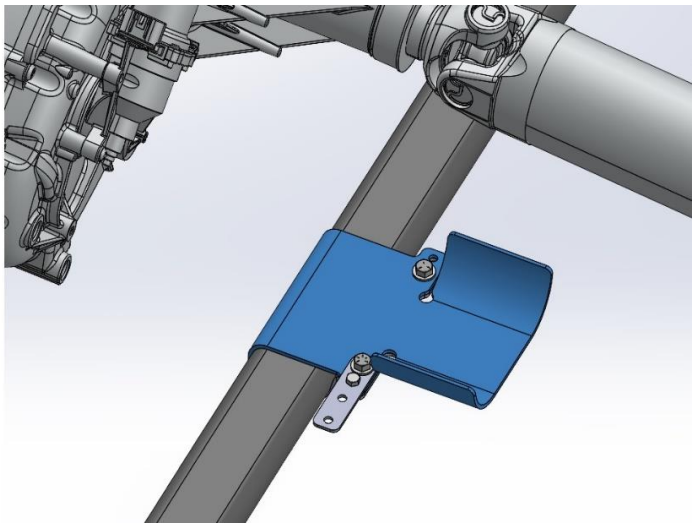

21 Place tank on a transmission jack, then lift the tank high enough to rest the nose of the tank on the front support. Reconnect the sending unit electrical connection and fuel lines. Then reconnect the vent and fill hose to the fuel port.

22 Once all connections are securely attached, lift the tank the rest of the way into place with the jack.

23 Run the 26" of 5/8" hose between the vent tee and the gray elbow located on the back corner of the tank, making sure there are no dips or sags in the hose. Run this hose between the bed support and truck bed. Use included worm drive clamp to secure hose to the gray elbow.

trailfortress.com/titan-fuel-tanks-xxl-replacement-mid-ship-fuel-tank-43-gallon-7010519



24 The TITAN tank straps will reuse the original equipment mounting brackets and bolts. Hang the inboard side in the brackets first. Finish attaching the tank straps using the OEM bolts and tighten them to OEM specifications.

25 Make sure ALL mounting hardware, clamps, bolts, etc. are properly installed and TIGHT. Double check it.

26 Lower vehicle, fill tank with diesel fuel (do not “top off”) and check for leaks.

trailfortress.com/titan-fuel-tanks-xxl-replacement-mid-ship-fuel-tank-43-gallon-7010519

SPECIAL NOTE:

(If tank does not include P/N 01 0132 0000, this spacer bracket will not be needed)

For 2019+ GM 1500 Crew Cab, Short & Standard Bed Duramax Diesel with Adaptive Ride Control.

If the installation vehicle is equipped with GM's Adaptive Ride Control, the driver's side rear suspension level arm will most likely interfere with the new TITAN fuel tank. If so, install the included spacer bracket between the truck frame and level arm (01 0132 0000).

The top of the spacer bracket will slot into the existing hole on the frame. The included carriage bolt will be installed through the frame and to the suspension level arm. In some cases, the lower hole in the frame will need to be drilled out slightly to create enough room for the bolt to fit through.

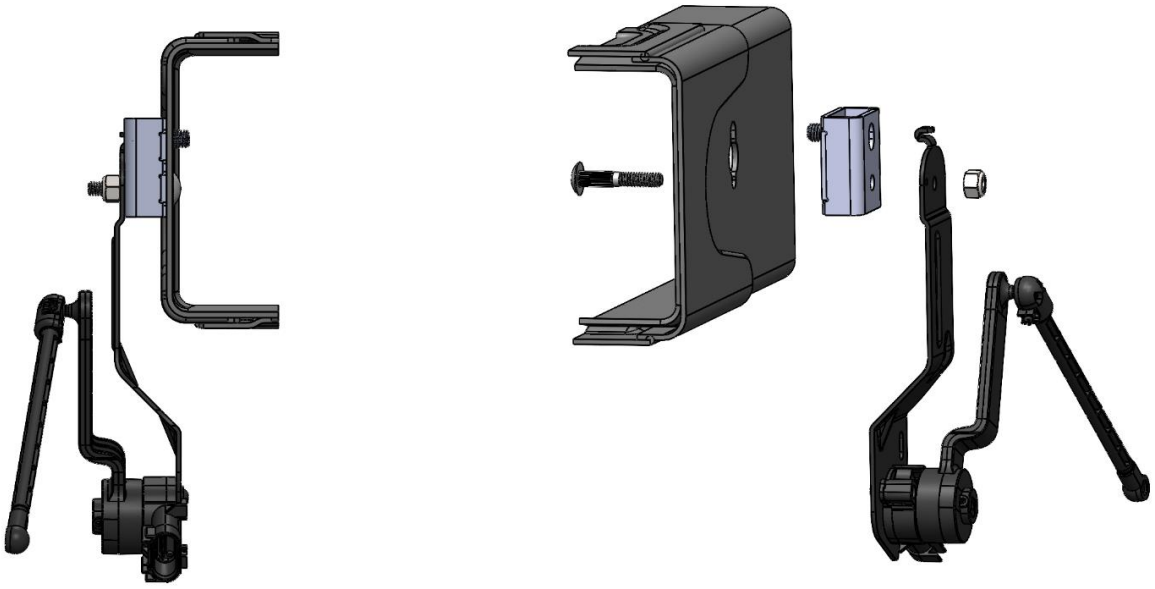

trailfortress.com/titan-fuel-tanks-xxl-replacement-mid-ship-fuel-tank-43-gallon-7010519

Be sure to return the completed warranty registration for your new Titan fuel tank; or you can register on-line at www.titanfueltanks.com

You will find your tank's serial number located on the bottom of the tank.

Write your tank's Serial Number here:_____

A tank must be registered within sixty (60) days of receipt for the warranty to be valid.

Warranty is void if product is improperly installed.

For questions or customer service call (800) 728-4982
TITAN Fuel Tanks
P.O. Box 2225
Idaho Falls, ID 83403 USA
Telephone (208) 522-1325, FAX (208) 529-2162
www.titanfueltanks.com

TITAN Fuel Tanks are PROUDLY MADE IN THE USA

Revised 8.20.24 ©2024 Supertanks, LLC

trailfortress.com/titan-fuel-tanks-xxl-replacement-mid-ship-fuel-tank-43-gallon-7010519