TRAIL FORTRESS

BUILT FOR THE TRAIL. CHECKED FOR YOUR TRUCK.

Titan Fuel Tanks 5015100 Installation Instructions

100 Gallon Transfer Tank

Part number: 5015100

trailfortress.com/titan-fuel-tanks-titan-100-gallon-transfer-tank-5015100

Scan for fitment, price and install help

INSTALLATION INSTRUCTIONS





5015090 and 5015100: 90* Gallon (340* liters) and 100* Gallon (378* liters) Universal In-Bed Diesel Transfer Tanks.

Important: Please read these instructions carefully and completely *before* starting the installation.

IMPORTANT NOTICE: *Before installation, thoroughly inspect the tank interior for ANY foreign debris!*

5015090:

	Description	Part Number	Qty
1	Titan 90 Gal Tank Body	98 0000 0301	1
2	Fuel Cap	99 0000 0562	1
3	Grounding Stud (Installed)	99 0150 0000	1
4	Rollover Valve (Installed)	99 0145 0000	1
5	2” NPT Plug for Transfer Pump Fitting (Installed)	99 0000 0561	1
6	Transfer Tank Small Bracket	99 0000 0601	2
7	Transfer Tank Large Bracket	99 0000 0731	2
8	3/8"-16 x 1.5” Carriage Bolt	99 0000 0587	8
9	3/8” Oversized Washer	99 0000 0588	8
10	3/8"-16 Locknut	99 0000 0451	8
11	3/8"-16 x 0.5" Socket Cap Screw	99 0000 0604	4

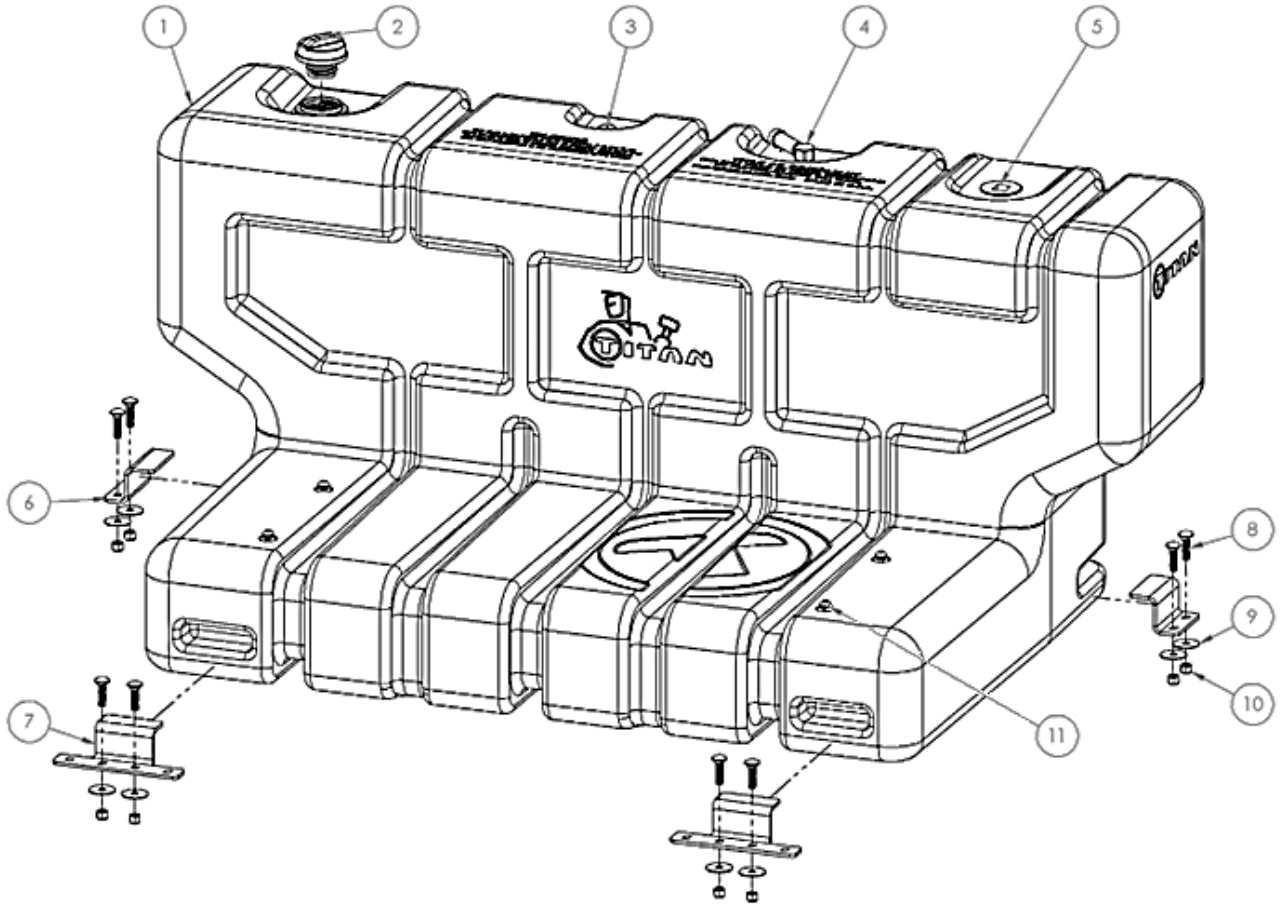

5015100:

	Description	Part Number	Qty
1	Titan 100 Gal Tank Body	98 0000 0303	1
2	Fuel Cap	99 0000 0562	1
3	Grounding Stud (Installed)	99 0146 0000	1
4	Rollover Valve (Installed)	99 0145 0000	1
5	2” NPT Plug for Transfer Pump Fitting (Installed)	99 0000 0561	1
6	Transfer Tank Small Bracket	99 0000 0601	2
7	Transfer Tank Large Bracket	99 0000 0731	2
8	3/8"-16 x 1.5” Carriage Bolt	99 0000 0587	8
9	3/8” Oversized Washer	99 0000 0588	8
10	3/8"-16 Locknut	99 0000 0451	8

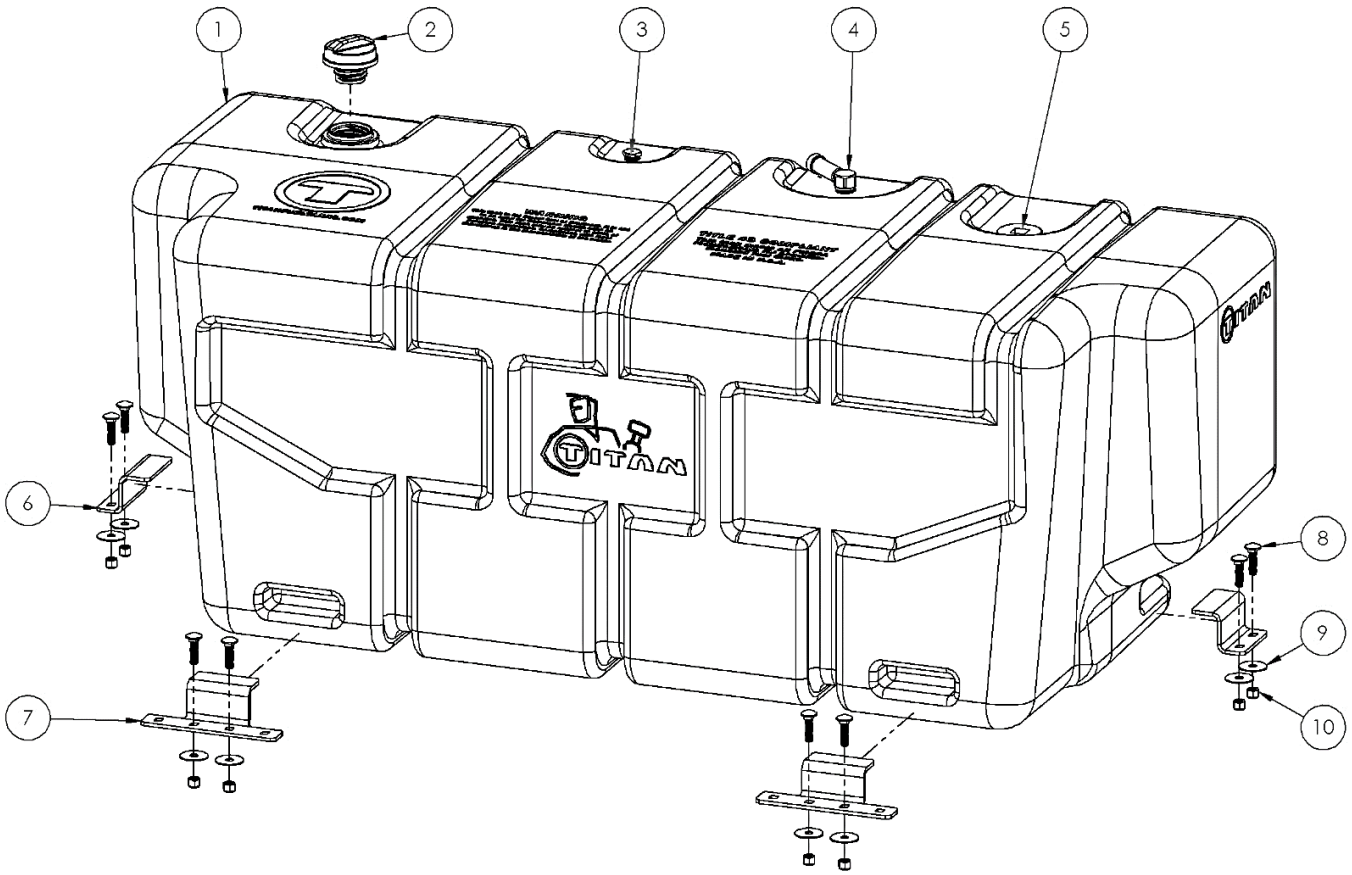

5015090 Identification Text (two panels):

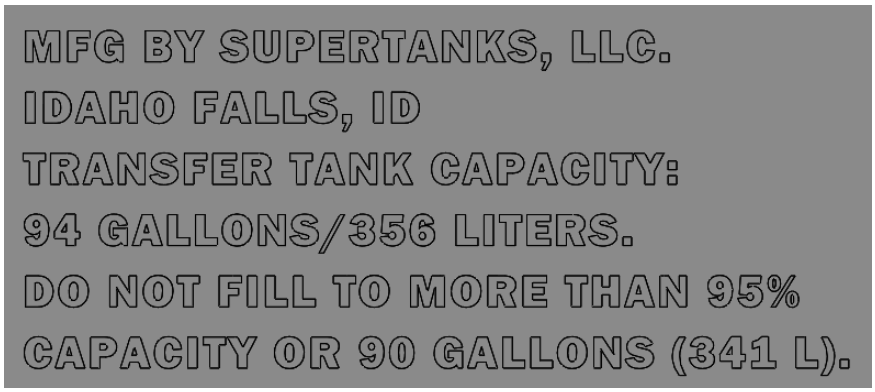



5015100 Identification Text:

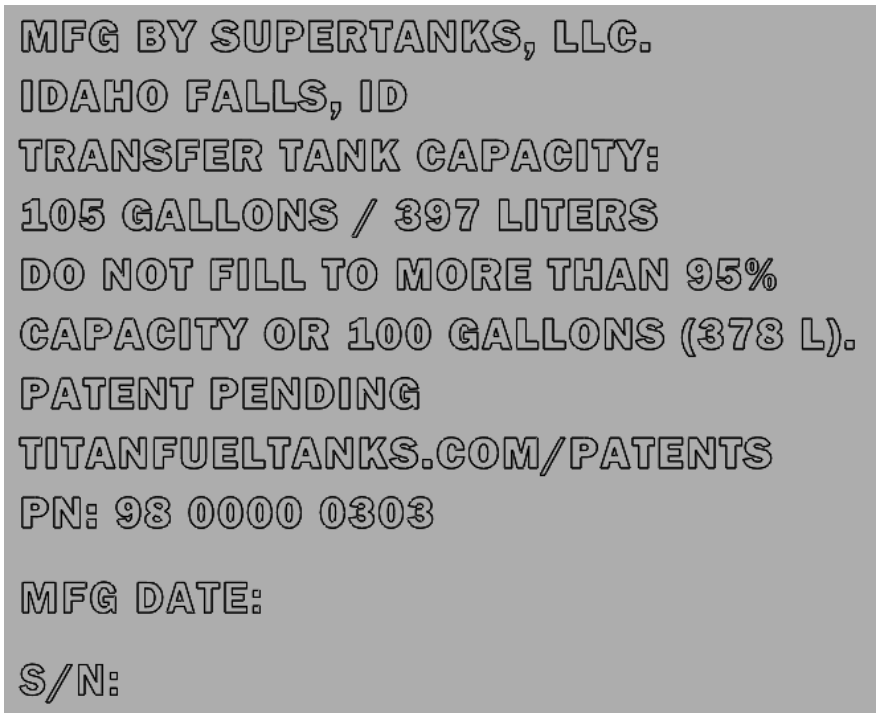

Note: Identification panels are located on the side of the tank nearest to the fuel cap. Please keep your serial number to register for warranty coverage.

Step Description

1. Mark the bolt locations for all four brackets. This can be done one of two ways:
    a. Using the mounting template.
        Make sure to leave enough space to clear the bulkhead at the back of the cab. Tape the mounting template down or mark the drill points clearly with a marker or paint pen, as the template is likely to tear or shift as you start drilling.
    b. Using the tank itself.
        Place the tank in the desired location and set the brackets where they belong. Mark the drill locations with a marker or paint pen, then move the brackets and tank out of the way.

    Please Note:
    - The small brackets are to be used at the rear of the tank (closer to the cab.) The large brackets are to be used at the front of the tank (closer to the tailgate.)
    - The large bracket has 4 holes for bolts. This is to provide options to work around different corrugation widths. At least 2 bolts must be used to secure this bracket, but any of the four holes may be used. Using all holes is not necessary.
    - Different corrugation widths may require the tank to shift slightly for optimal installation.

2. If desired, mount any accessories, such as transfer pumps or gravity feed kits, onto the tank following the instructions included with those products.

3. **BEFORE DRILLING:** Check under the bed for drilling interference with crossmembers, supports, wires, fill hoses, etc. If necessary, reposition the tank or mounting template to clear any issues.

4. Drill the 8 holes with a 7/16” drill bit. Loosely install the small brackets with the included 3/8” carriage bolts, washers, and locknuts. Use the provided spacers, or something of a similar height, for bolts that fall on corrugation valleys to bridge the gap between the bed and the bracket.

5. Slide tank into place and install the large brackets with the rest of the included 3/8” hardware.

6. Tighten down all bolts and finish installing any accessories. Attach the grounding wire from the grounding stud on top of the tank to the truck. The grounding wire should make metal-on-metal contact with the frame. It’s acceptable if contact is made with a bolt into the frame or a metal bed.

IMPORTANT NOTICE: When installing a transfer pump, only use Teflon tape. Do not use pipe sealing adhesive.

IMPORTANT NOTICE: When installing a transfer pump, make sure the draw tube is centered in the draw tube retainer located on the bottom of the tank.

Go to TITAN's website to view video installation instructions and tips.

Be sure to return the completed warranty registration for your new Titan fuel tank; or you can register on-line at www.titanfueltanks.com

You will find your tank's serial number on the bottom of the tank.

Write your tank's Serial Number here:_____

A product must be registered within sixty (60) days of receipt for the warranty to be valid. Other conditions may apply. Consult TITAN's full warranty for details.

*All capacities are approximate.

Warranty is void if product is improperly installed.

For questions or customer service call (800) 728-4982

TITAN Fuel Tanks™
P.O. Box 2225
Idaho Falls, ID 83403 USA
Telephone (208) 522-1325, FAX (208) 529-2162
www.titanfueltanks.com

For patent information: http://titanfueltanks.com/patents

TITAN Fuel Tanks are PROUDLY MADE IN THE USA!

Revised 9.11.2023 ©2023 Supertanks, LLC. All rights reserved.