Titan Fuel Tanks 4020217 Installation Instructions

4020217

Part number: 4020217

trailfortress.com/titan-fuel-tanks-after-axle-auxiliary-tank-4020217

Scan for fitment, price and install help

TITAN pt. no.: 02 0000 0344

Important: Please read these instructions carefully and completely *before* starting the installation.

TITAN Fuel Tanks

INSTALLATION GUIDE

Gen6





40 Gallon (151 Liters), Cross-Linked Polyethylene Auxiliary Tank system for FORD Diesel-Fueled Vehicles

4020017: *For **2017+** FORD models F-350, F-450 and F-550 Narrow Frame, Cab and Chassis vehicles.*

After-axle auxiliary tank system supplements the original equipment mid-ship tank. *This system provides a fuel tank and components providing an additional 40 gallons of range in addition to the fuel carried by the stock tank. TITAN's remarkable Electronic Controller moves fuel from the 40 gallon auxiliary to the stock tank with the touch of a button.*

Note: *Due to the huge variety of truck bodies in use, this system does not include a fill neck kit for the rear auxiliary tank. These can be obtained from TITAN Fuel Tanks, your Ford dealer, or in some cases the truck body manufacturer. Be sure to obtain the proper filler neck to fit your vehicle and application.*

Required Tools:

1 ea. Ratcheting socket driver
1 ea. SET of metric sockets
1 ea. 12 inch long socket driver extension
1 ea. 16 mm socket

Recommended Optional Tools:

1 ea. Impact wrench

trailfortress.com/titan-fuel-tanks-after-axle-auxiliary-tank-4020217

1 ea. 19 mm end wrench
1 ea. Small flat blade screw driver
1 ea. Medium flat blade screw driver
1 ea. Needle nose pliers
1 ea. Mallet or small hammer

Generation 6

4020017 After-axle, Heavy Duty Cross-Linked Polyethylene Auxiliary Tank System to supplement original equipment mid-ship tank

Parts List:

1 ea. 02 0000 0186 — Extra heavy-duty, 40* gallon, cross-linked polyethylene (XLHDPE) fuel tank

Part Identification: Name “TITAN™ FUEL TANKS” appears on the driver’s side of the of the tank body.
The number “02 0000 0186” appears below the Lettering.

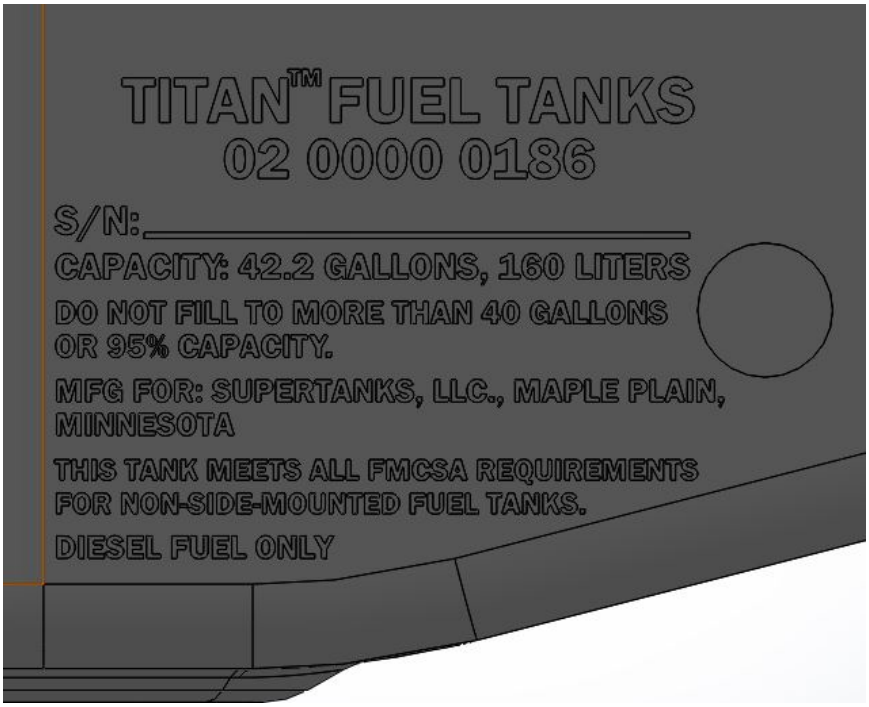

Identifying text on side of the tank.

Note: *Please check, before beginning to be sure the tank is properly identified as the one to fit your vehicle.*

1 ea.	02 0000 0197	Bright Orange TITAN “O” Ring Gasket
1 ea.	98 0000 0402	TITAN Torque Ring™, Top Ring
1 ea.	99 0102 0000	Rollover Vent, Fill-Stop Valve (TEMCO brass), with 5/16”x 1.5” Fuel Hose Vent Line already installed on valve. Install valve with appropriate thread compound. Install so vent hose is pointed directly at center of sending unit hole.
1 ea.	02 0000 0213	¼” NPTF 316 SS Male Hex Plug [Place loose w/ instructions]
1 ea.	99 0000 0185	TITAN™ Warranty Envelope
1 ea.	02 0000 0344	Installation Instructions for 2017+ Ford After-Axle Auxiliary Tank
1ea.	02 0000 0219	Ford Aft Axle Aux Sender
1ea.	99 0000 0137	1/2" NPT Brass Rollover Valve
1ea.	02 0000 0225	Automotive Heat Insulation
2ea.	02 0000 0217	2011 Ford AFT Axle Tank Bottom Strap
2ea.	02 0000 0218	2011 Ford Aft Axle Tank Top strap
1ea.	02 0000 0220	Withdraw Tube Fitting, 3/8 NPT, Trimmed 2-1/4"
1ea	98 0000 0751	13" Level sensor
1ea	98 0000 0752	Level Sensor Under Ring, Stainless Steel
1ea	02 00000 338	Parts Kit for 4040217

0200000338 Parts Kit for 4020217

0200000338 Parts Kit for 4020217		
QTY	P/N	Description
1	0200000339	Pump kit for 4020217
1	9900000995	Parts Box 14 x 14 x 4
1	0200000341	Wire Kit for 4020217
1	0200000342	Hardware Kit for 4020217

0200000339 Pump Kit for 4020217

9900000523 Spare Tire Pump Clamps Sub-KIT		
QTY	P/N	Description
2	9900000422	#8 Hose Clamp with 5/16" Band Width
8	9900000483	#4 Hose Clamp with 5/16" Band Width

9900000521 In-Line Solenoid Pump Assembly		
QTY	P/N	Description
1	9900000370	In-Line Solenoid Pump

2	9900000403	1/8" NPT to 3/8" Hose Barb Adapter, Gray Kynar

9900000525 Electronic Pump Controller Assembly		
QTY	P/N	Description
1	9901300000	Electronic Controller
1	9900000283	Adhesive Backed Velcro, 2 inches long

0200000340 Hose Sub Kit for 4020217		
QTY	P/N	Description
1	9900000405	In-Line-Filter with 3/8" Hose Barbs
1	9900000760	5/16" RLA Fuel Hose, 8 Foot Length
1	9900000759	3/8" RLA Fuel Hose, 8 Foot Length
1	9900000409	Poly Vent Line Filler Neck Adapter

0200000341 Wire Kit for 4020217		
QTY	P/N	Description
1	9900000160	8 Gauge Grounding Wire, 30 in
1	9900000159	Insulated Ring Terminal 8 Gauge by 1/2" Stud
1	9900000158	Insulated Ring Terminal 8 Gauge by 10" Stud
2	9800000787	18 AWG Black Wire, 28 Feet
1	9800000788	18 AWG Purple Wire, 28 Feet
1	9800000789	18 AWG Blue Wire, 28 Feet
3	9900000204	18 AWG Crimp Insulated Ring Terminal, 3/8" Stud
6	9900000203	18 AWG Heat Shrink Butt Splice Terminal
1	9900000489	22-18 Gauge Barrel Quick-Disconnect Terminal
1	9900000487	ATM Fuse Tap
1	9900000996	1/4" ID Wire Loom, Black Polyethelene, 20 Feet

0200000342 Hardware Kit for 4020217		
QTY	P/N	Description
1	0200000221	1/4" NPT Hex Head Pipe Plug, Grey PVDF
6	0200000222	M12 x 1.75mm, 40 mm Long Serrated Flange Head Hex Screw, Class 8.8 Zinc Plated Steel
6	0200000223	M12 x 1.75 mm Nylon Locknut, Class 8 Zinc-Plated Steel
6	0200000224	M12 Flat Washer, Zinc-Plated Steel
2	9900000420	Oval Head Drilling Screw, 8-18 Thread, 1" Length, Zinc-Plated
6	9900000993	Zip Tie, 12" Length

I. Prepare Auxiliary Tank

Step	Description
1	In a safe and approved manner, arrange the vehicle so that the rear of the vehicle and the fill neck vent line area of the stock tank is accessible and unobstructed.
2	The new TITAN auxiliary tank will come with the after-axle auxiliary sending unit installed in the tank (See Fig. 1). Double check to make sure the top ring of the TITAN Torque Ring™ has not loosened in shipment. The ring should be tightened clockwise as far as it will go.
3	The kit comes with heat shield material which must be attached to the tank (See Fig. 2). The material is made to be folded and applied as illustrated. The shield has adhesive, but ultimately is held in place by the tank strap.

II. Install Auxiliary Tank

Step	Description
4.	The tank is designed to fit under the very back of the vehicle frame (See Fig. 3). The straps are installed as shown in both Figs. 3 and 4.
5.	Lift the tank into place with the sending unit end closest to the front of the vehicle. Install the straps to hold it into place and tighten thoroughly.
6	The hose barbs on the sending unit are designed to accommodate 3/8” and 5/16” fuel line hose (see Fig. 5). The larger 3/8” hose is the fuel supply line and the 5/16” is a return line. Install the hoses on the hose barbs of the sending unit and clamp tightly. The return line will be run to the small barb on the (99 0000 0409) Vent, Fill Neck Adapter (see Figs. 6 & 7).
7	The 3/8” fuel supply line will be run to the fuel pump and inline filter (see Fig. 8). Mount the pump, using drilling screws and filter, and fasten in a convenient location, preferably in a somewhat sheltered place out of the path of water and ice. Be sure the inline filter is located before the suction side of the fuel pump. Filter needs to be accessible for service (See Fig. 8).
8	Using the supplied ring terminal, ground black fuel pump wire to chassis member using supplied, extra 30” wire, if needed. Attach red power wire on pump to blue 20 ft. wire provided, using supplied heat-shrink butt terminals. Cover with plastic loom. Run wire loom with wire from Electric Fuel Level Sensor wire along frame rail to cab access. **Refer to Fig. 9, wiring diagram.**
9	Cut vent line at vehicle’s OEM fill neck, and install Vent Fill Neck Adapter (99 0000 0409). The small diameter tubing of the adapter should be closest to vehicle’s fill cap (see Fig. 7).

trailfortress.com/titan-fuel-tanks-after-axle-auxiliary-tank-4020217

Step	Description
10	Connect 3/8” line from pump to largest barb on Vent Fill Neck Adapter (see Figs. 6 & 7). The 5/16” hose from the sending unit goes to the other barb. Use hose clamps on all connections.
11	Mount the TITAN™ Electronic Controller in the cab in a convenient location and complete wiring of the system according to the wiring diagram (see Fig. 9).
12	A fill neck assembly must be ordered separately from TITAN, your Ford dealer, or possibly the truck body manufacturer. Install it now on the auxiliary tank.
13	Important: Fill the tank, operate and check for leaks. Double check all fasteners and connections to be sure they are tight. For operating instructions of the TITAN™ Electronic Controller see Fig. 10.

trailfortress.com/titan-fuel-tanks-after-axle-auxiliary-tank-4020217

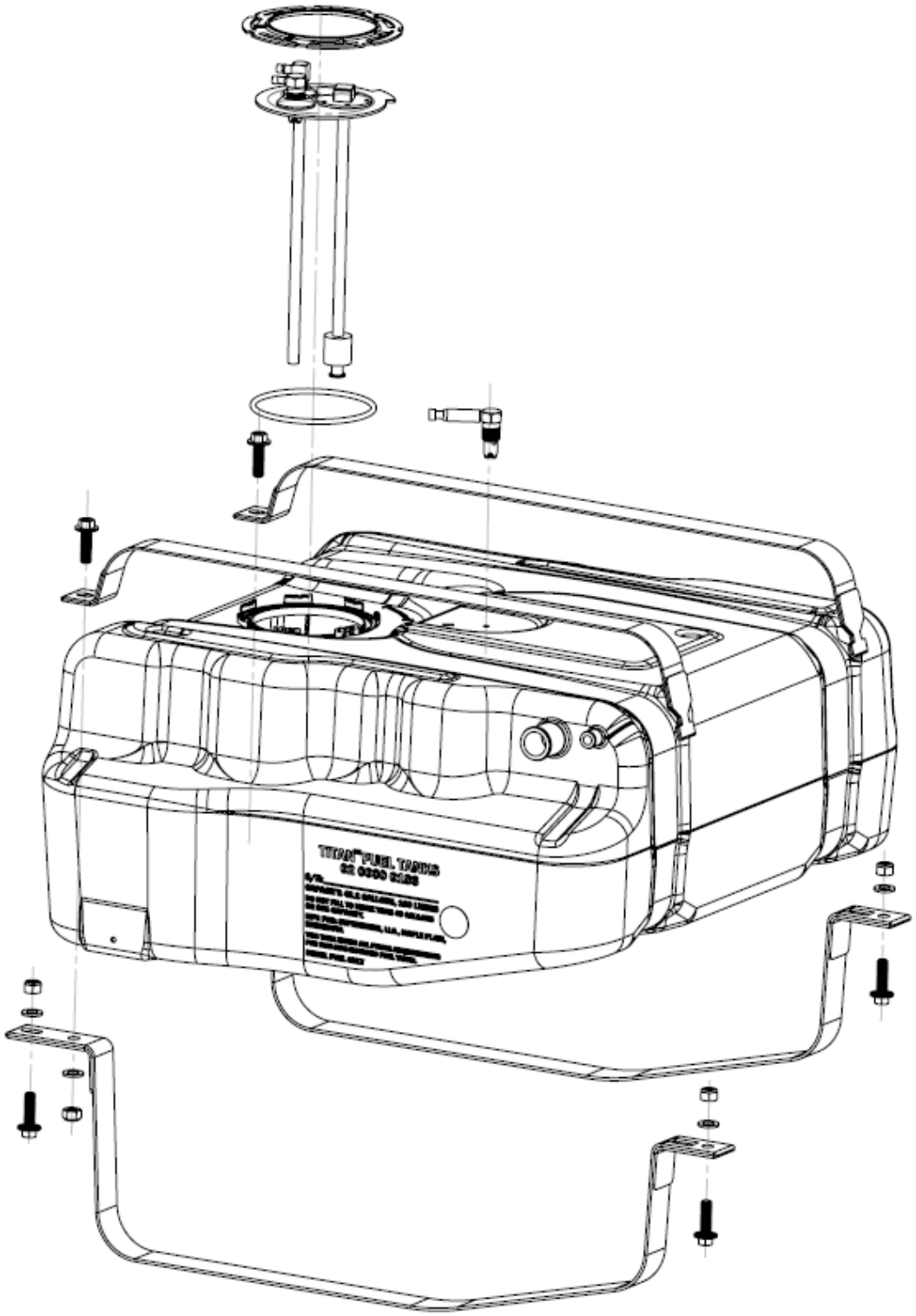

(Fig. 1) Exploded view showing the TITAN 40 Gallon After-Axle Auxiliary Tank with straps, TITAN Sending Unit, fasteners, rollover vent valve, o-ring and TITAN Torque Ring™--top.

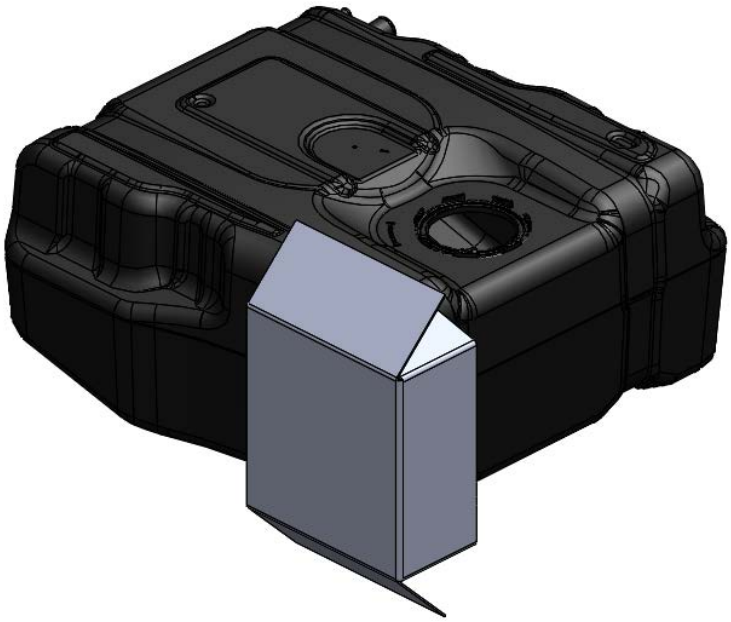

(Fig. 2) Install heat shield material to the corner of the tank as shown. The material is made to be folded and applied as illustrated. The shield has adhesive, but ultimately is held in place by the tank strap.



(Fig. 3) Rear of vehicle, showing how tank straps are attached to the frame.

trailfortress.com/titan-fuel-tanks-after-axle-auxiliary-tank-4020217



(Fig. 4) Front of TITAN tank, showing how tank straps are attached to the frame. The tank product shown is the same tank in a different application, but the attachment to the frame is correct for this auxiliary product too.

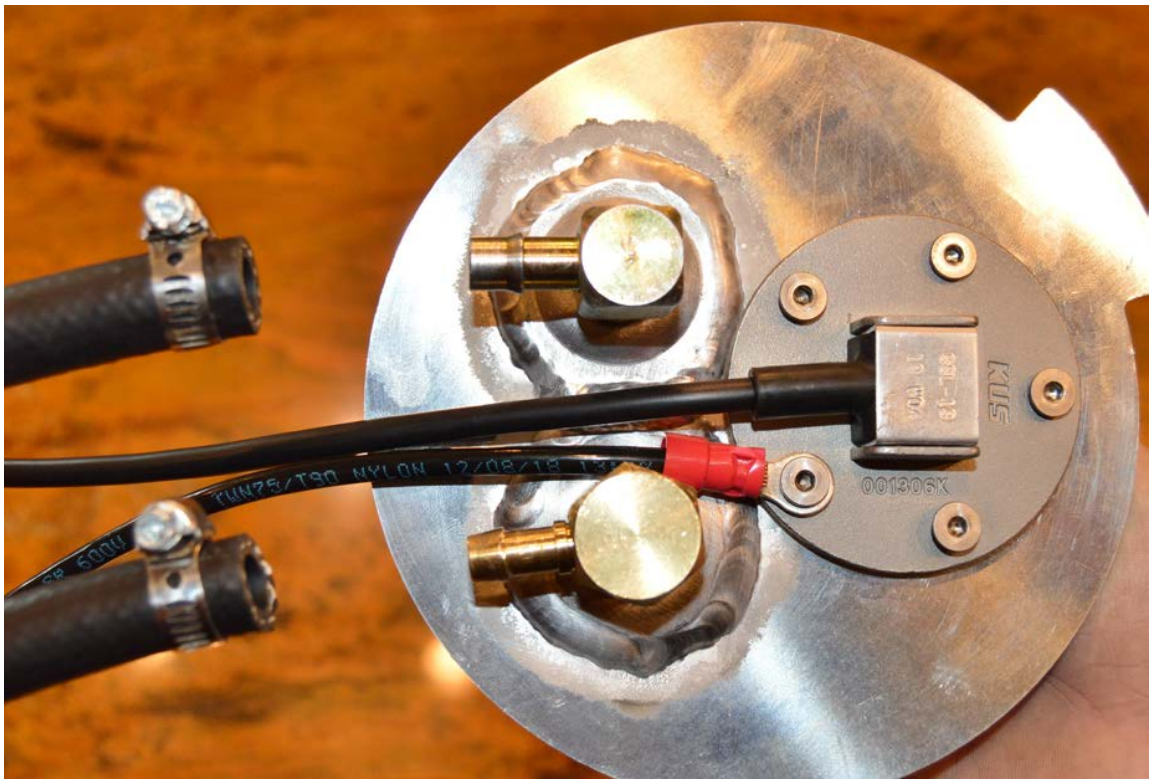

(Fig. 5) On the sending unit, attach the 5/16” and 3/8” hose to the appropriate size barbs. Note the ground wire attached to the screw on the level sensor. Be sure the ground wire is attached and grounded to the vehicle frame.



(Fig. 6) Shown: 99 0000 0409 Vent, Fill Neck Adapter, Polymer wiith 5/16” and 3/8” hose barbs.



(Fig. 7) Vent, Fill Neck Adapter installed in the vent line of the fill neck of the stock, OEM, mid-ships tank. Install so the larger,3/8” barb is farthest away from the fill neck. Adapter is to be installed so the two hose barbs point toward the filler neck cap as shown.

trailfortress.com/titan-fuel-tanks-after-axle-auxiliary-tank-4020217



(Fig. 8) Fuel pump and inline filter installed.

TITAN™ Electronic Controller Pump Wiring Diagram

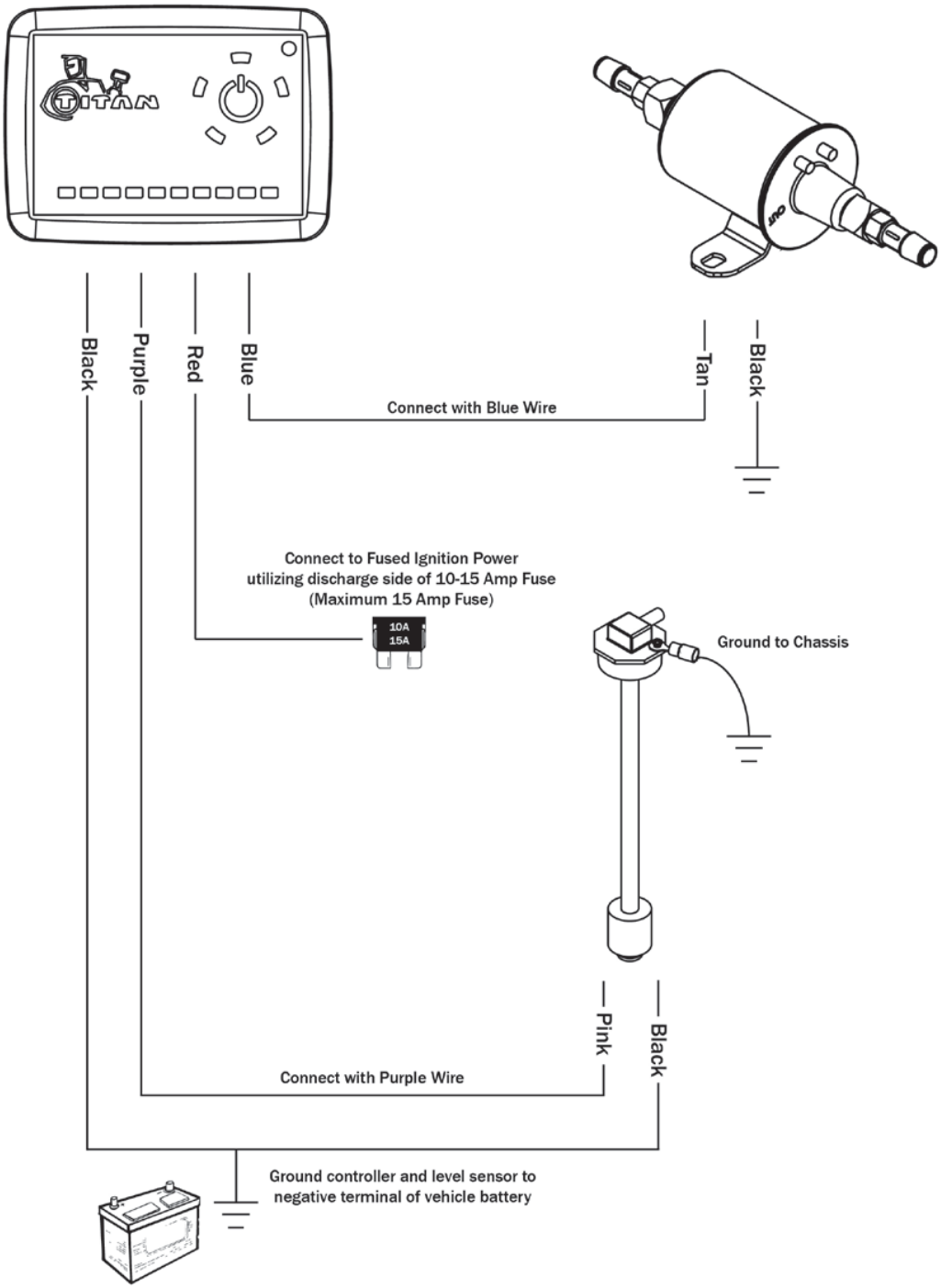

(Fig. 9) TITAN™ Electronic Controller, pump, and level sensor wiring diagram.

trailfortress.com/titan-fuel-tanks-after-axle-auxiliary-tank-4020217

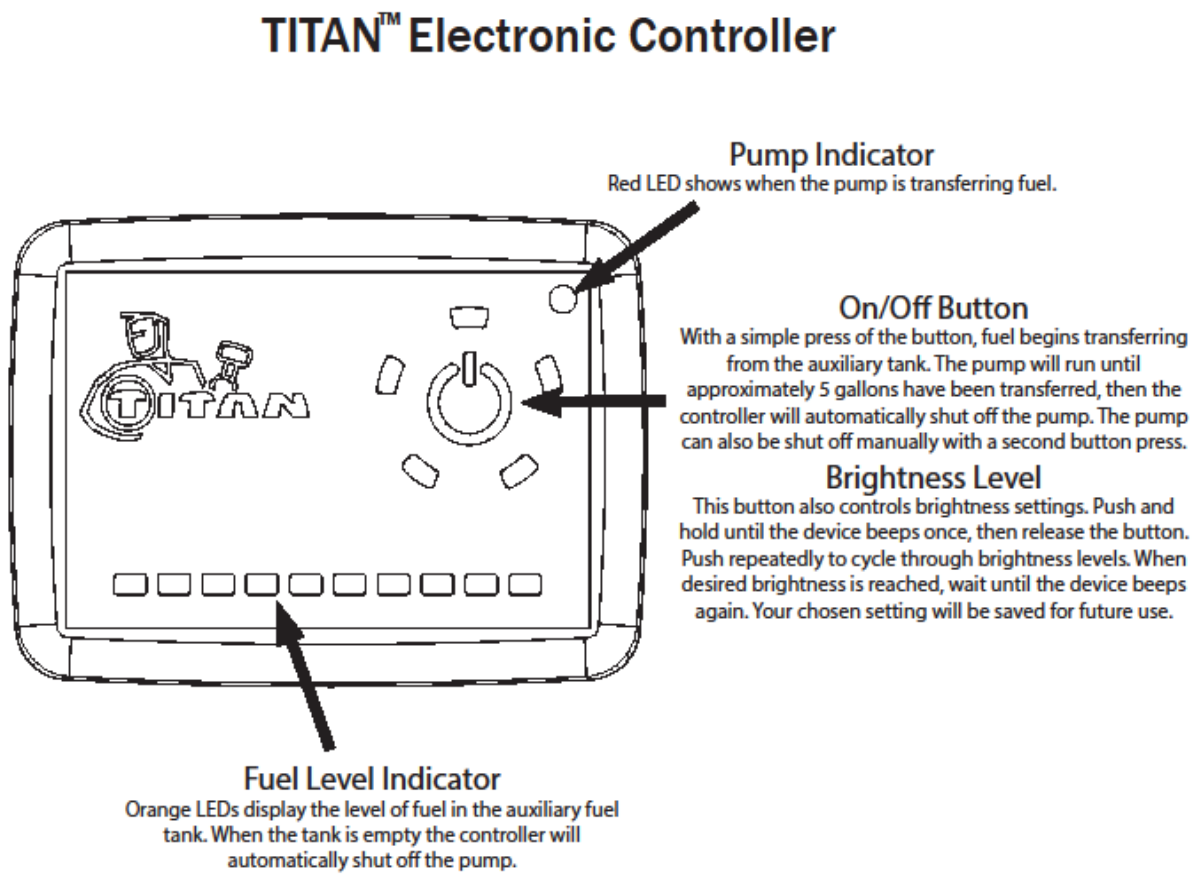

(Fig. 10) TITAN™ Electronic Controller operating instructions.

* All capacities are approximate

Be sure to return the completed warranty registration for your new Titan fuel tank; or you can register on-line at www.titanfueltanks.com

Write your tank's Serial Number here:_____

trailfortress.com/titan-fuel-tanks-after-axle-auxiliary-tank-4020217

A tank must be registered within sixty (60) days of receipt for the warranty to be valid.

Warranty is void if product is improperly installed.

For questions or customer service call (800) 728-4982

P.O. Box 2225
Idaho Falls, ID 83403 USA
Telephone (800) 728-4982 FAX (208) 529-2162

www.titanfueltanks.com

TITAN Fuel Tanks are PROUDLY MADE IN THE USA

Revised 7.24.19 ©2019 Supertanks, LLC



trailfortress.com/titan-fuel-tanks-after-axle-auxiliary-tank-4020217