TRAIL FORTRESS

BUILT FOR THE TRAIL. CHECKED FOR YOUR TRUCK.

Rough Country RCZ4125A Installation Instructions

Cab Heater for Polaris RZR XP 1000 & XP 4 1000 (2014–2025)

Part number: RCZ4125A

trailfortress.com/cab-heater-polaris-rzr-xp-1000-xp-4-1000-rough-country-rcz4125a

Scan for fitment, price and install help



POLARIS RZR CAB HEATER

Thank you for choosing Rough Country for all your UTV needs.

Please read instructions before beginning installation. Check the kit hardware against the kit contents shown below. Be sure you have all needed parts and know where they go.
If question exist, please call us @1-800-222-7023. We will be happy to answer any questions concerning this product.
Check all fasteners for proper torque. Check to ensure for adequate clearance between all components.
Periodically check all hardware for tightness.



TOOLS NEEDED:
2 1/2” Hole Saw
1” Hole Saw
Drill Motor
Tape Measure
Marker
3/8” Socket/Wrench
Ratchet
1/8” Drill
Screwdrivers
Knife or Scissors
Pliers
Manufacturer Approved Engine Coolant
Clamping Pliers

Torque Specs:

Size	Grade 5	Grade 8	Size	Class 8.8	Class 10.9
5/16”	15 ft/lbs	20ft/lbs	6MM	5ft/lbs	9ft/lbs
3/8”	30 ft/lbs	35ft/lbs	8MM	18ft/lbs	23ft/lbs
7/16”	45 ft/lbs	60ft/lbs	10MM	32ft/lbs	45ft/lbs
1/2”	65 ft/lbs	90ft/lbs	12MM	55ft/lbs	75ft/lbs
9/16”	95 ft/lbs	130ft/lbs	14MM	85ft/lbs	120ft/lbs
5/8”	135ft/lbs	175ft/lbs	16MM	130ft/lbs	165ft/lbs
3/4”	185ft/lbs	280ft/lbs	18MM	170ft/lbs	240ft/lbs

trailfortress.com/cab-heater-polaris-rzr-xp-1000-xp-4-1000-rough-country-rcz4125a

1. Drain coolant from vehicle.
2. Tape the provided cut-out templates to the location shown in **Photo 1.** Repeat for the other side. **NOTE:** Place the edge of the template as close to the windshield seal as possible.
3. Use an 1/8” drill in the center of the templates to make the pilot hole. **See Photo 2.**

Photo 1

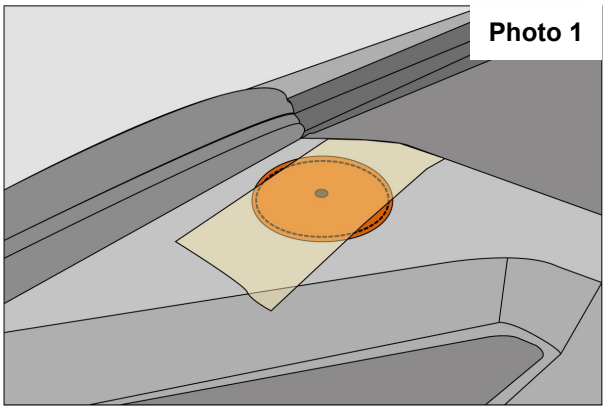

Photo 2

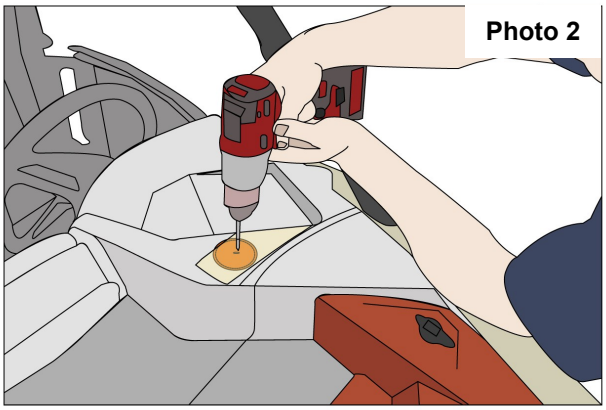

4. Remove the hood, grab bar, top dash panel, middle dash panel, and the glove box. **See Photo 3.**
5. Use a cutting tool to remove the back half of the glove box.
6. Use the provided black screws to secure the glove box cut out to the glove box flange. **See Photo 4.**

Photo 3

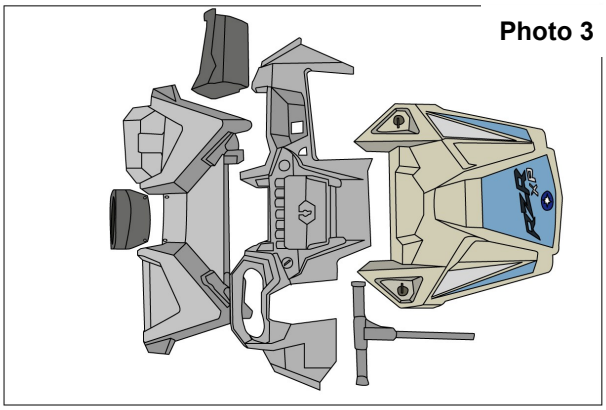

Photo 4

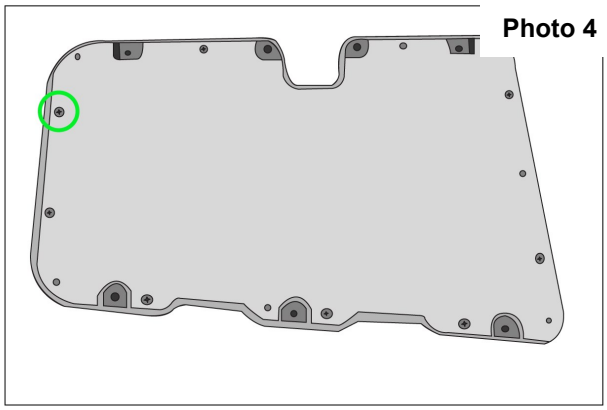

7. Cut the four lengths of air duct and install on the heater box adapters as shown in **Photo 5.** Zip tie the air ducts to the heater box. **NOTE: Photo 5** shows the lengths and locations of each air duct.
8. Mount the heater box to the square framing bar and use a supplied self-tapping screw to secure it. **See Photo 5.**
9. Use the supplied bolts, washers, and lock nuts to secure the bottom bracket through the firewall. **See Photo 6.**

Photo 5

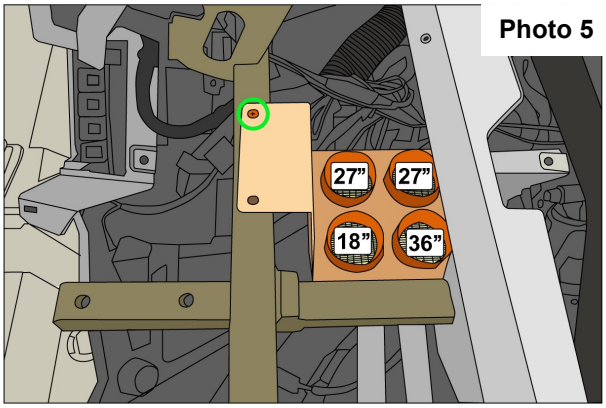

Photo 6

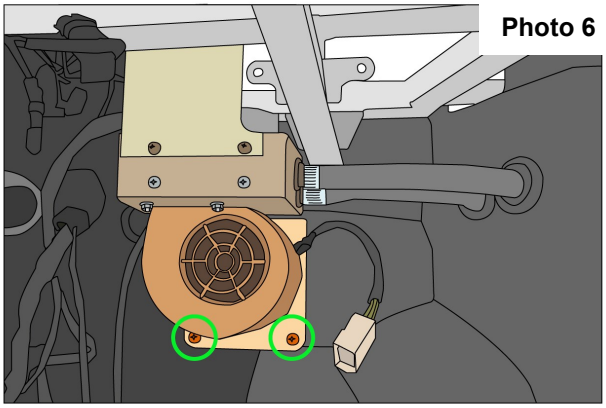

trailfortress.com/cab-heater-polaris-rzr-xp-1000-xp-4-1000-rough-country-rcz4125a

10. Use a 1” hole saw to install the two rubber grommets as shown in. NOTE: It may be necessary to tine tune the hole diameter to fit the grommets. **Photo 7.**
11. Use the supplied y-fitting to splice into the lower radiator hose. **NOTE:** Make sure the 5/8” splice is pointing towards the radiator. **See Photo 8.**

Photo 7

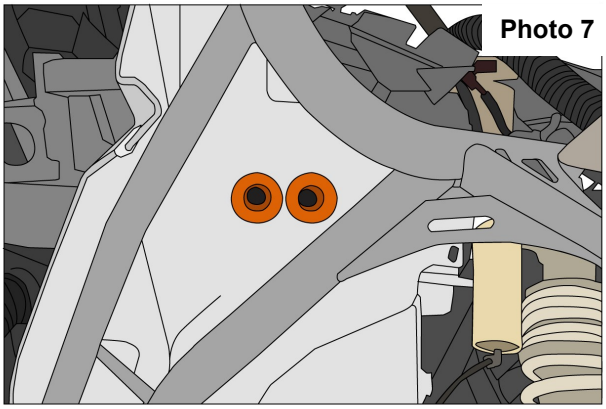

Photo 8

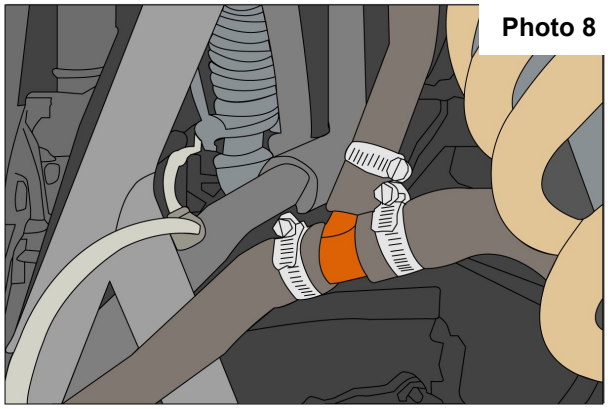

12. **TURBO MODELS ONLY:** Refer to **Photo 9** and **Photo 10** for y-fitting placement. Zip tie hose to keep it away from the front shock.

Photo 9

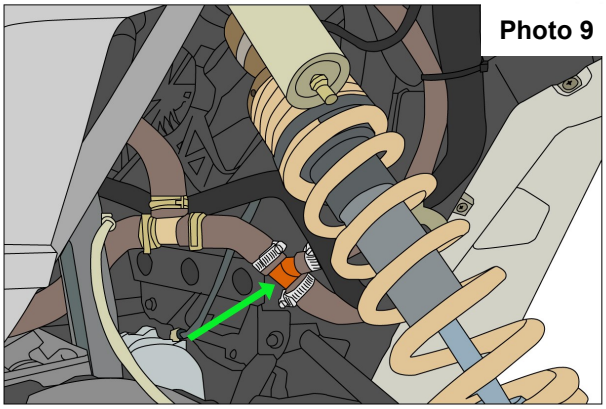

Photo 10

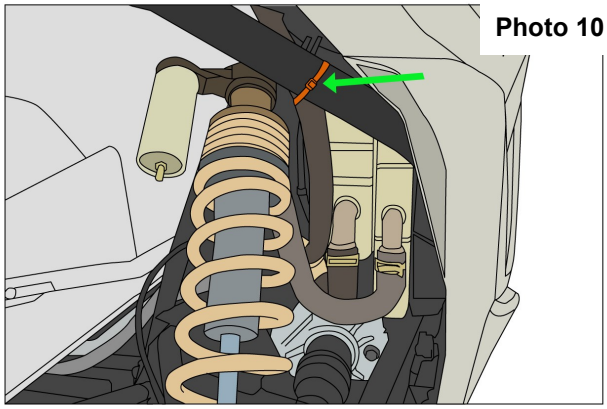

13. Cut a four foot long piece of heater hose and connect it to the y-fitting. Run this hose through the left grommet of **Step 9** and connect to heater core fitting.
14. Locate the oil cooler line from the passenger side rear wheel well. Use an appropriate cutting tool to make a cut in the line and add supplied t-fitting. Secure with supplied hose clamps. **See Photo 11.**
15. Use a 10mm socket to remove the main skid plate from underneath the vehicle. Retain hardware for reuse.
16. Run the remaining heater hose from the front of the machine to the t-fitting previously installed. Be sure to run the hoses in front of the radiator fan and follow them to the passenger side fender and into the rubber grommets from **Step 9. NOTE:** Run the hose above the hanger bearing mount to avoid the driveshaft. Use extra zip ties supplied if needed.
17. Connect the heater hose to the t-fitting. **See Photo 11.**
18. Connect both hoses to the heater core and secure with supplied hose clamps (White Circle). **See Photo 12.**

Photo 11

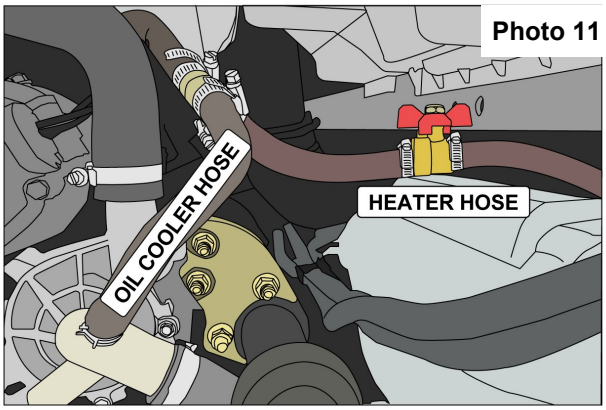

Photo 12

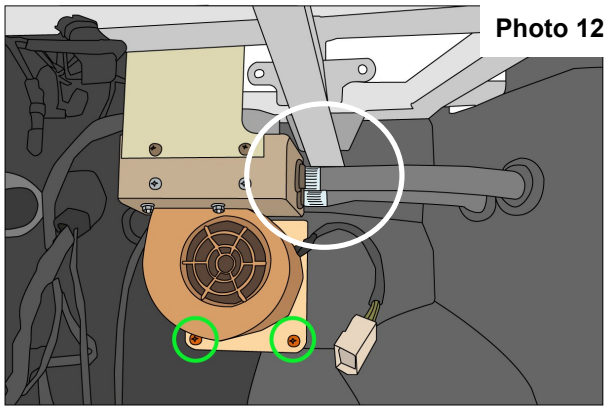

19. Remove factory switch plate and install the provided rocker switch.
20. Plug the switch connector into the back of the rocker switch using the supplied wiring harness.
21. Run the blower fan connector of the wiring harness to the heater box and plug it into the heater blower.
22. Run the red and black wires through the fire wall grommet and install the ends on the 12V accessory bar. **See Photo 13.**
23. Test to make sure blower works.
24. Install glove box back in place. **See Photo 14.**

Photo 13

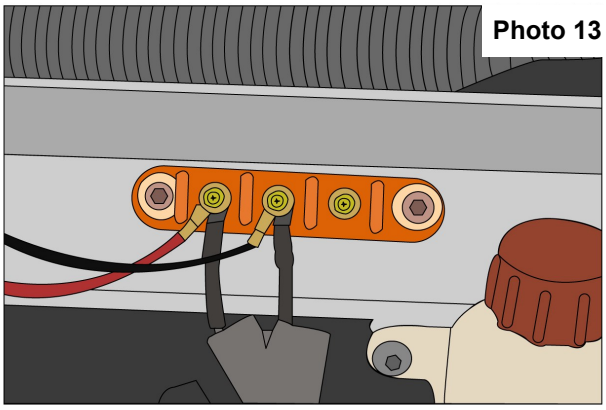

Photo 14

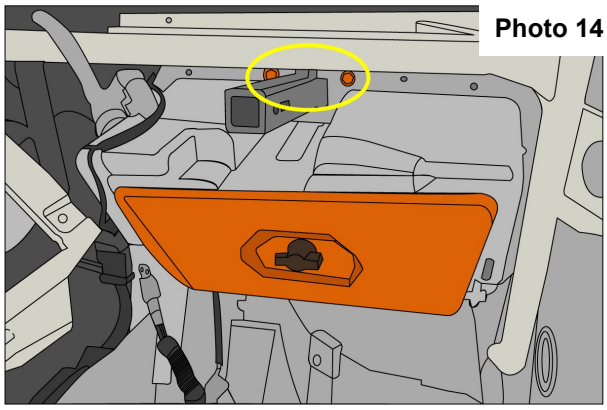

25. Install the passenger side open storage compartment with the remaining self-tapping screw. **See Photo 15.**
26. Reinstall the cab components from **Step 3 EXCEPT** for the top dash panel.
27. Set the lower louver plate against the edge of the lower dash and mark the hole locations to be drilled (White circles). Set plate aside. Use a 3/16” drill at the marked locations and make the holes. **See Photo 16.**
28. Install two of the louvers onto the louver plate by unscrewing the face from the louver and sandwiching the two parts using the louver plate. Use provided clips for optimal hold.
29. Install the louver plate to the previously drilled holes using the supplied rivets. **See Photo 16.**

Photo 15

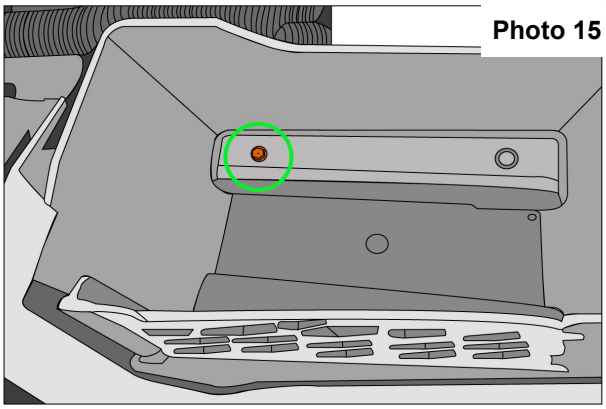

Photo 16

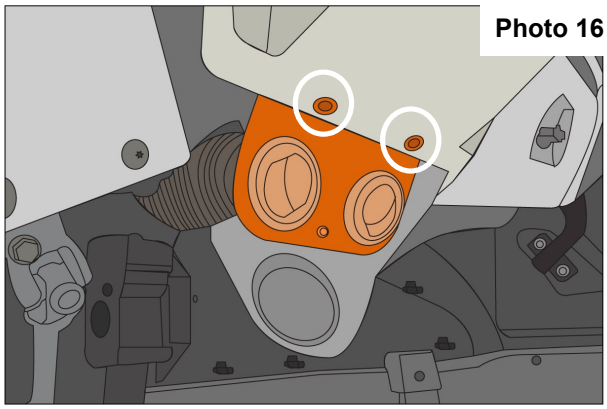

30. Run the 27” air ducts to the floor louver adapters and secure using the provided zip ties.
31. Use a 2 1/2” hole saw to make holes where the 3/16” pilot holes are. Install the louvers using the same method in **Step 28. See Photo 17.**
32. Reinstall top dash panel.
33. Refill radiator and check for leaks. Run vehicle to get all air out of the cooling system.

Photo 17

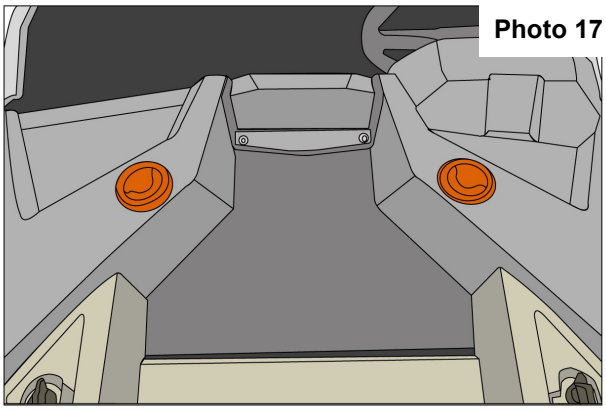

trailfortress.com/cab-heater-polaris-rzr-xp-1000-xp-4-1000-rough-country-rcz4125a

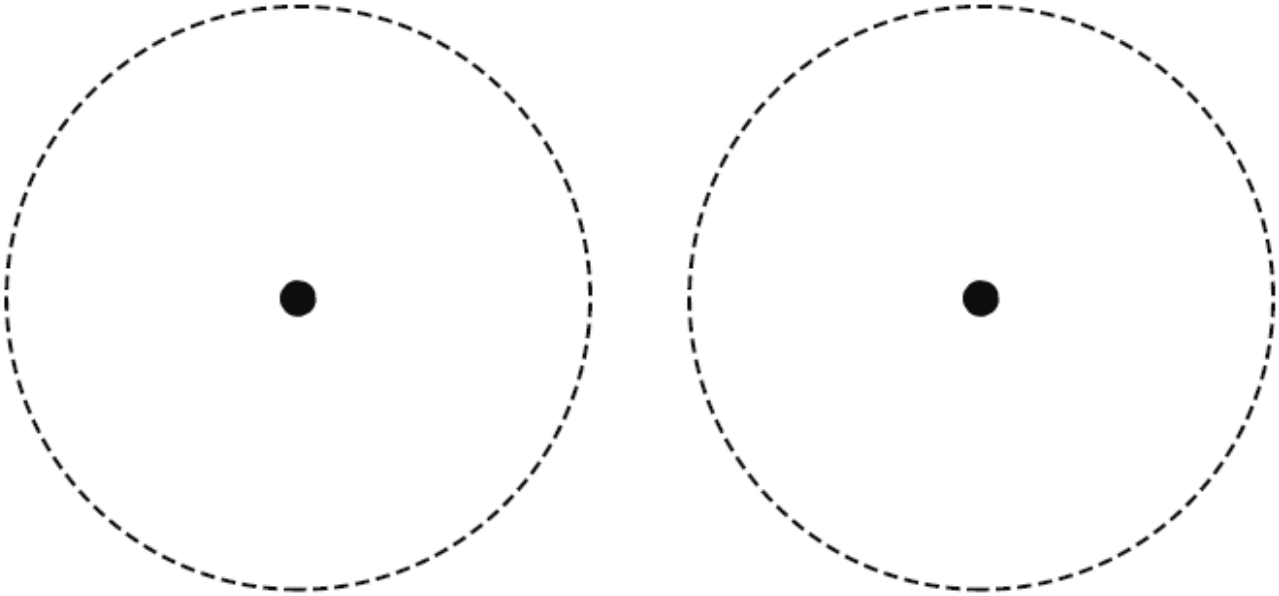

POST INSTALLATION INSTRUCTIONS

1. Check all fasteners for proper torque. Check to ensure for adequate clearance between all rotating, mobile, fixed, and heated members. Verify clearance between exhaust and brake lines, fuel lines, fuel tank, floorboards, and wiring harness.
2. Perform steering sweep to ensure front brake hoses have adequate slack and do not contact any rotating, mobile, or heated members. Inspect rear brake hoses at full extension for adequate slack. Failure to perform hose check/ replacement may result in component failure.
3. All kit components must be retightened at 500 miles and then every 300 miles after installation. Periodically check all hardware for tightness.

By purchasing any item sold by Rough Country, LLC, the buyer expressly warrants that he/she is in compliance with all applicable, State, and Local laws and regulations regarding the purchase, ownership, and use of the item. It shall be the buyers responsibility to comply with all Federal, State and Local laws governing the sales of any items listed, illustrated or sold. The buyer expressly agrees to indemnify and hold harmless Rough Country, LLC for all claims resulting directly or indirectly from the purchase, ownership, or use of the items.

trailfortress.com/cab-heater-polaris-rzr-xp-1000-xp-4-1000-rough-country-rcz4125a