TRAIL FORTRESS

BUILT FOR THE TRAIL. CHECKED FOR YOUR TRUCK.

Rough Country PW049980 Installation Instructions

Retractable Bed Step for Ram 1500 4WD/RWD (2009-2024)

Part number: PW049980

trailfortress.com/rough-country-retractable-bed-step-pw049980

Scan for fitment, price and install help

ROUGH COUNTRY
SUSPENSION SYSTEMS®

09-18 Ram 1500 (Single Exhaust Only) Manual Bed Step

Thank you for choosing Rough Country for your suspension needs.

Rough Country recommends a certified technician install this system. In addition to these instructions, professional knowledge of disassembly/reassembly procedures as well as post installation checks must be known. Attempts to install this system without this knowledge and expertise may jeopardize the integrity and/or operating safety of the vehicle. Please read instructions before beginning installation. Check the kit hardware against the parts list on this page and the product layout on the last page. Be sure you have all needed parts and know where they go. Also please review tools needed list and make sure you have needed tools.

⚠WARNING

PRODUCT USE INFORMATION

Rough Country makes no claims regarding lifting devices and excludes any and all implied claims. We will not be responsible for any product that is altered.

If questions exist we will be happy to answer any questions concerning the design, function, and correct use of our products.

⚠NOTICE

NOTICE TO DEALER AND VEHICLE OWNER

Any vehicle equipped with any Rough Country product should have a “Warning to Driver” decal installed on the inside of the windshield or on the vehicle’s dash. The decal should act as a constant reminder for whoever is operating the vehicle of its unique handling characteristics. Re-torque all installed hardware as often as possible to ensure safe operation.

INSTALLING DEALER - it is your responsibility to install the warning decal and forward these installation instructions on to the vehicle owner for review. These instructions should be kept in the vehicle for its service





Torque Specs:

Size	Grade 5	Grade 8	Size	Class 8.8	Class 10.9
5/16"	15 ft/lbs	20ft/lbs	6MM	5ft/lbs	9ft/lbs
3/8"	30 ft/lbs	35ft/lbs	8MM	18ft/lbs	23ft/lbs
7/16"	45 ft/lbs	60ft/lbs	10MM	32ft/lbs	45ft/lbs
1/2"	65 ft/lbs	90ft/lbs	12MM	55ft/lbs	75ft/lbs
9/16"	95 ft/lbs	130ft/lbs	14MM	85ft/lbs	120ft/lbs
5/8"	135ft/lbs	175ft/lbs	16MM	130ft/lbs	165ft/lbs
3/4"	185ft/lbs	280ft/lbs	18MM	170ft/lbs	240ft/lbs

INSTALLATION INSTRUCTIONS

PARTS LIST:

Qty	Item Description	Qty	Item Description
1	Corner Step Base	1	8mm Lock Washer
1	Step Pad	1	8-1.25mm x 20mm Hex Bolt
1	Mounting Bracket	4	8mm Nylon Lock Nuts
1	Support Bracket	5	8mm x 24mm x 2mm Flat Washers
4	8-1.25mm x 25mm Combo Bolts	4	8-1.25mm x 20mm T Bolts

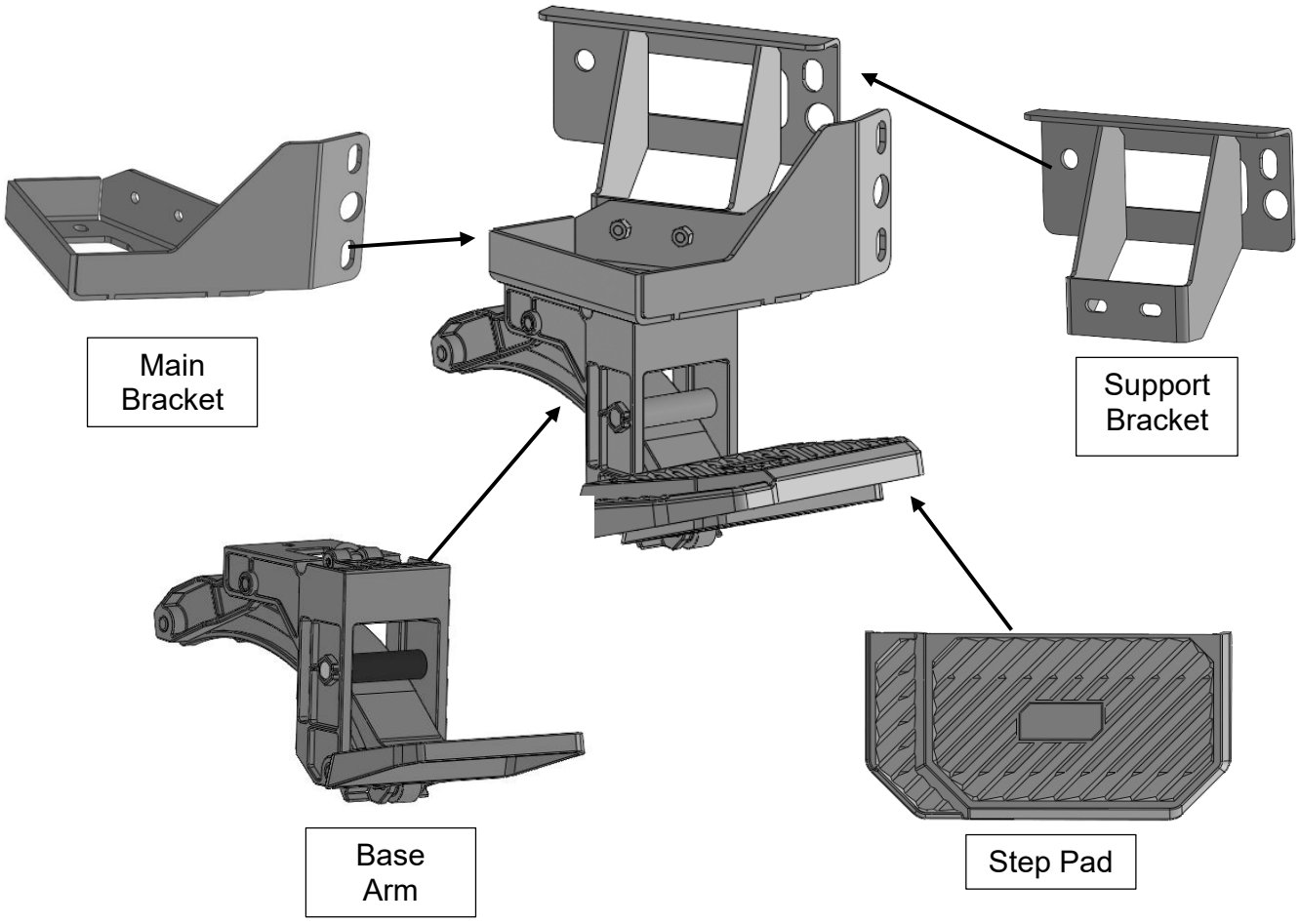

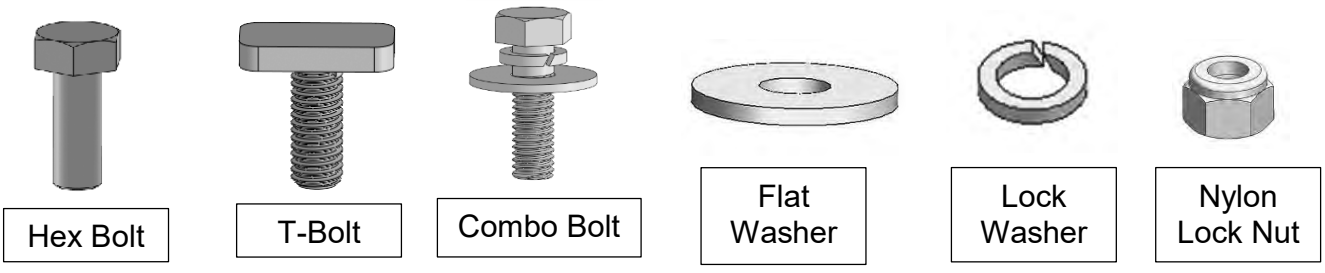

trailfortress.com/rough-country-retractable-bed-step-pw049980

TOOLS REQUIRED

			
Rachet	Socket	Extensions	Wrench

1 Follow (Fig 1 – 15) to attach the brackets to the frame and bumper. **Do not tighten hardware at this time.**

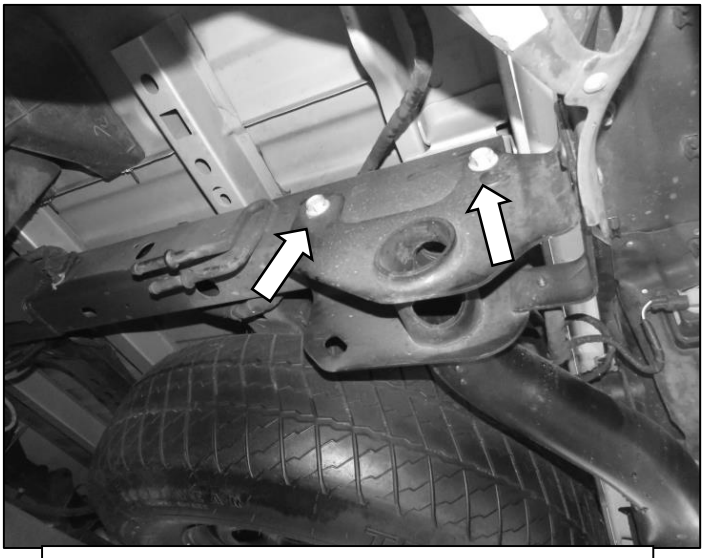

(Fig 1) Starting at Driver Side rear bumper, locate and carefully remove two frame bolts. They will be reused for mounting the Support Bracket.

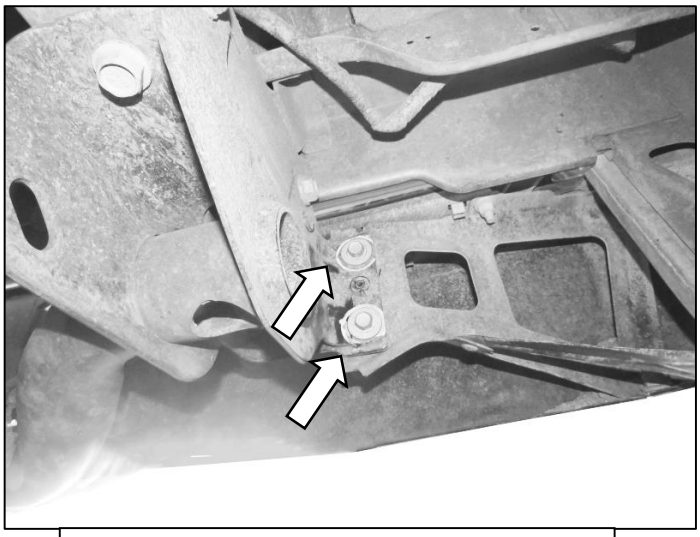

(Fig 2) Carefully remove two factory bumper bolts from rear bumper mount. They will be reused for Mounting Bracket.



(Fig 3) Attach Support Bracket to frame mounting points reusing two factory frame bolts.

trailfortress.com/rough-country-retractable-bed-step-pw049980

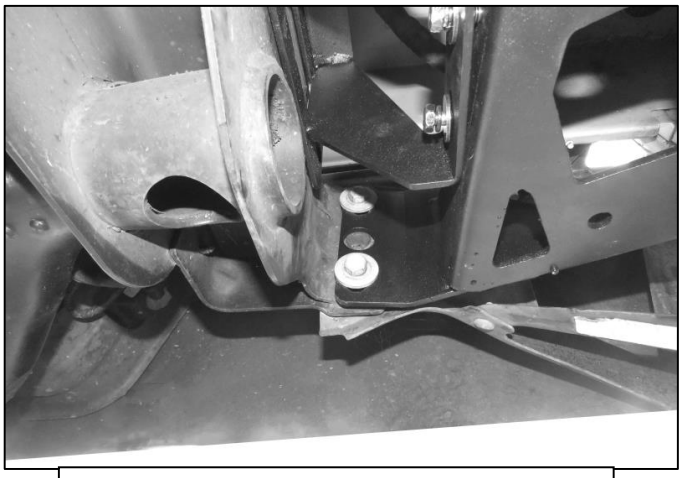

(Fig 4) Attach Mounting Bracket to bumper pointing points reusing two factory bumper bolts.

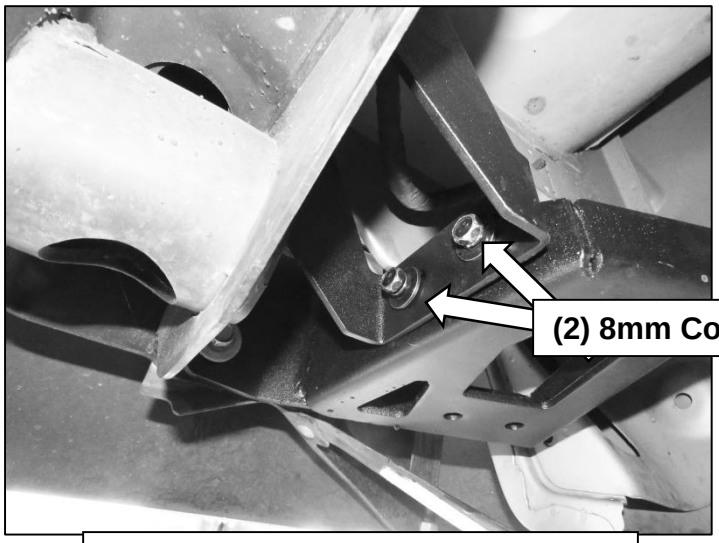

(Fig 5) Attach Mounting Bracket and Support Bracket together using (2) 8mm Combo Bolts

2

Follow (Fig 6-8) to install Step Base and Step Pad. **Do not fully tighten hardware at this time. Note:** Excess dirt and debris may prevent the step from functioning properly. Simply clean the dirt off with water to maintain optimal condition of Corner Step.

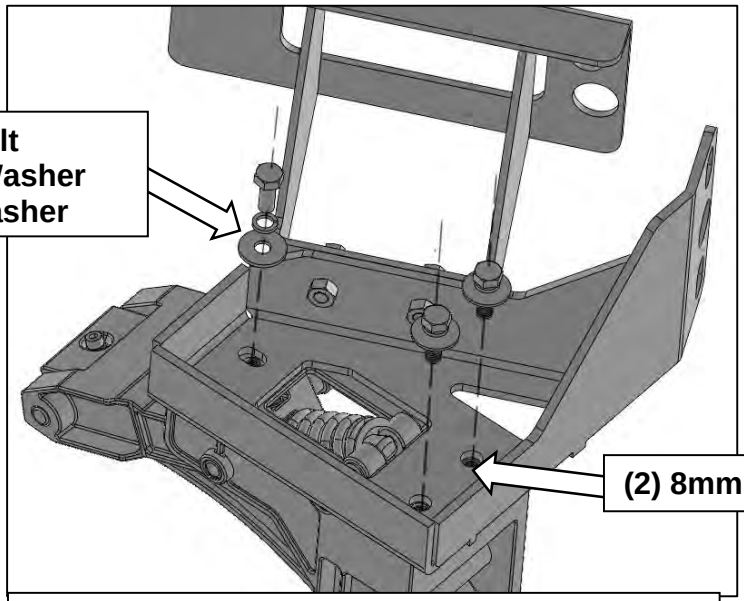

(Fig 6) Attach Step Base to Mounting Bracket

trailfortress.com/rough-country-retractable-bed-step-pw049980

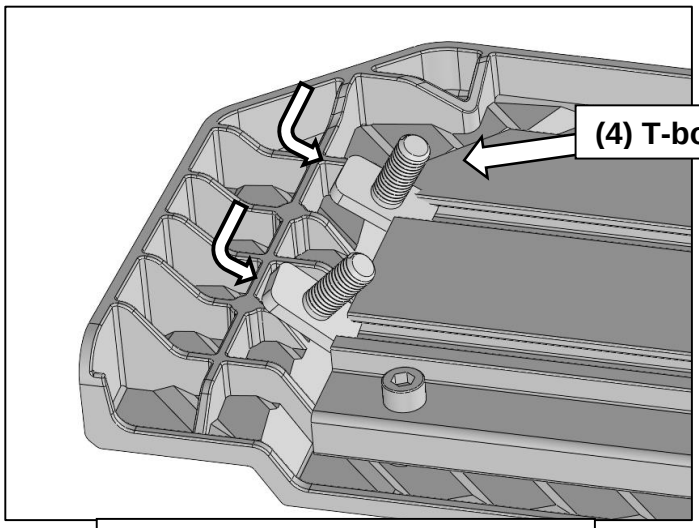

(Fig 7) Slide in T-bolts through open ends of the channels underside of Step Pad (two T-bolts per channel)

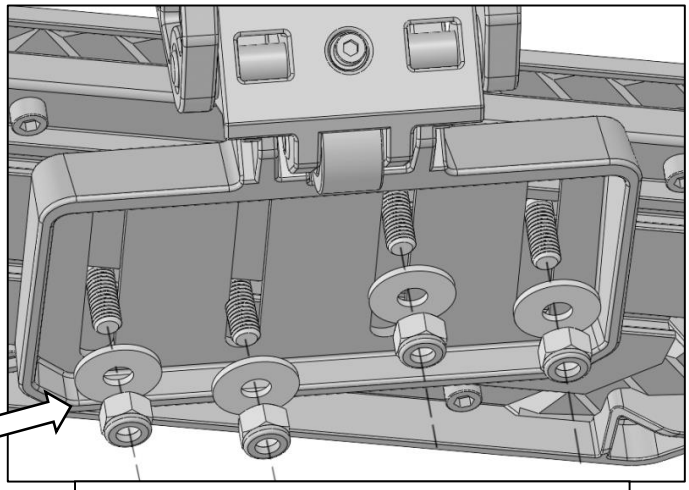

(Fig 8) Attach Step Pad to Corner Step Base.

3

<u>Tighten all hardware at this time to the preferred position.</u> Do periodic inspections to the installation to make sure that all hardware is secure and tight.



trailfortress.com/rough-country-retractable-bed-step-pw049980