TRAIL FORTRESS

BUILT FOR THE TRAIL. CHECKED FOR YOUR TRUCK.

Rough Country PW049818 Installation Instructions

Retractable Bed Step for 2016–2023 Toyota Tacoma

Part number: PW049818

trailfortress.com/rough-country-retractable-bed-step-pw049818

Scan for fitment, price and install help

PW049818

16-23 Toyota Tacoma Manual Bed Step

THANK YOU FOR CHOOSING ROUGH COUNTRY FOR ALL OF YOUR VEHICLE NEEDS.

Rough Country recommends a certified technician install this system. In addition to these instructions, professional knowledge of disassembly/reassembly procedures as well as post installation checks must be known. Attempts to install this system without this knowledge and expertise may jeopardize the integrity and/or operating safety of the vehicle. Please read instructions before beginning installation. Check the kit hardware against the parts list on this page and the product layout on the last page. Be sure you have all needed parts and know where they go. Also please review tools needed list and make sure you have needed tools.

⚠WARNING

PRODUCT USE INFORMATION

Rough Country makes no claims regarding lifting devices and excludes any and all implied claims. We will not be responsible for any product that is altered.

If questions exist we will be happy to answer any questions concerning the design, function, and correct use of our products.

⚠NOTICE

NOTICE TO DEALER AND VEHICLE OWNER

Any vehicle equipped with any Rough Country product should have a “Warning to Driver” decal installed on the inside of the windshield or on the vehicle’s dash. The decal should act as a constant reminder for whoever is operating the vehicle of its unique handling characteristics. Re-torque all installed hardware as often as possible to ensure safe operation.

INSTALLING DEALER - it is your responsibility to install the warning decal and forward these installation instructions on to the vehicle owner for review. These instructions should be kept in the vehicle for its service







Torque Specs:

Size	Grade 5	Grade 8	Size	Class 8.8	Class 10.9
5/16"	15 ft/lbs	20ft/lbs	6MM	5ft/lbs	9ft/lbs
3/8"	30 ft/lbs	35ft/lbs	8MM	18ft/lbs	23ft/lbs
7/16"	45 ft/lbs	60ft/lbs	10MM	32ft/lbs	45ft/lbs
1/2"	65 ft/lbs	90ft/lbs	12MM	55ft/lbs	75ft/lbs
9/16"	95 ft/lbs	130ft/lbs	14MM	85ft/lbs	120ft/lbs
5/8"	135ft/lbs	175ft/lbs	16MM	130ft/lbs	165ft/lbs
3/4"	185ft/lbs	280ft/lbs	18MM	170ft/lbs	240ft/lbs

INSTALLATION INSTRUCTIONS

PARTS LIST:

Name	QTY
Corner step linkage arm base component	1
Step pad (Newest)	1
Frame mounting bracket	1
Support bracket	1
8-1.25mm x 25mm Combo bolts	4
8mm Lock washer	1
8-1.25mm x 20mm Hex Bolt	1
8mm Nylon Lock Nuts	4
8mm x 24mm x 2mm Flat washers	5
8-1.25mm x 20mm T-Bolt	4

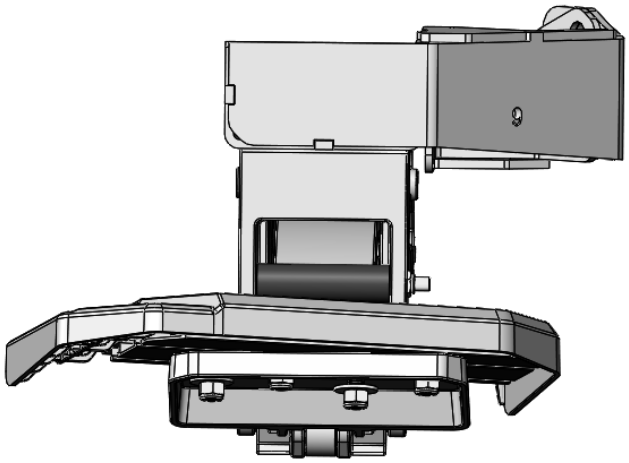

Linkage Arm Assembly

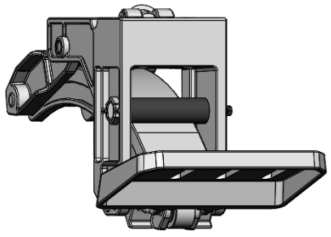

Frame mounting bracket

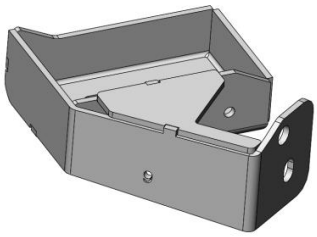

Support Bracket

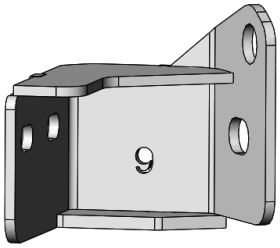

Step Pad

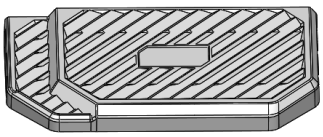



Lock Washer



Flat Washer



Hex Bolt

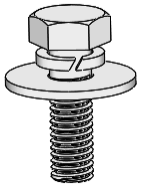

Combo Bolt

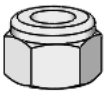

Lock Nut

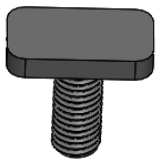

T-Bolt

trailfortress.com/rough-country-retractable-bed-step-pw049818

TOOLS REQUIRED

 Rachet	 13mm Socket 17mm Socket	 Extensions	 Wrench

1 Follow (Fig 1) to combine the mounting bracket to the support bracket. **<u>Do not fully tighten hardware at this time.</u>**

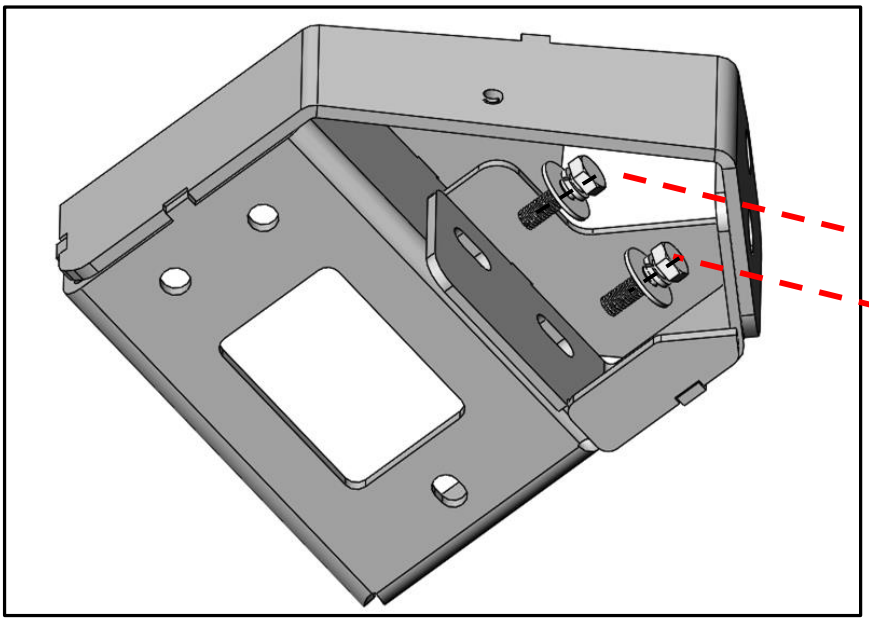

(Fig 1) Combine the support bracket to the frame mounting bracket

2 Follow (Fig 2 – 3) to install the mounting bracket & support bracket to the frame of the vehicle.

(Fig 2) Starting at the rear DS remove the (2) OEM 17mm hex nuts

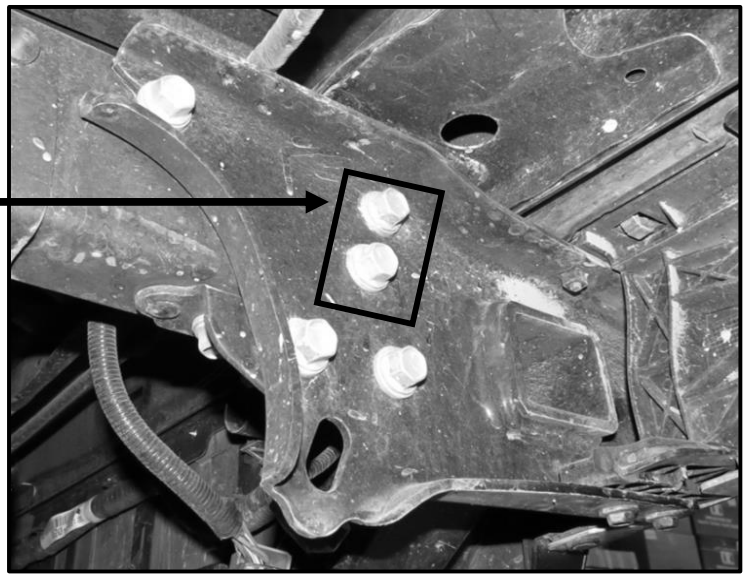

trailfortress.com/rough-country-retractable-bed-step-pw049818



(Fig 3) Mount the combined brackets to the vehicle reusing the 17mm OEM bolts

3

Follow (Fig 4-7) to install the rest of the linkage arm assembly to the mounting bracket. Once finished, **Tighten all hardware at this time to the preferred position.** Do periodic inspections to the installation to make sure that all hardware is secure and tight.

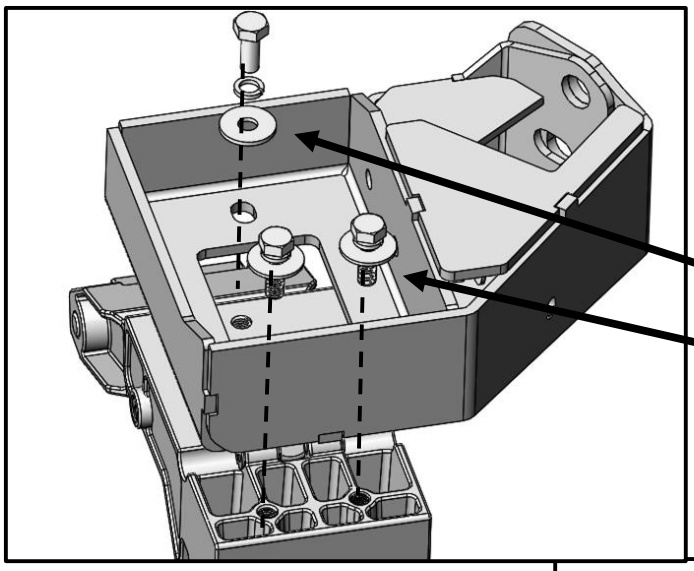

(Fig 4) Mount the frame & support bracket to the linkage arm assembly

(Fig 5) Slide in T-bolts through open ends of the channels underside of Step Pad (two T-bolts per channel)

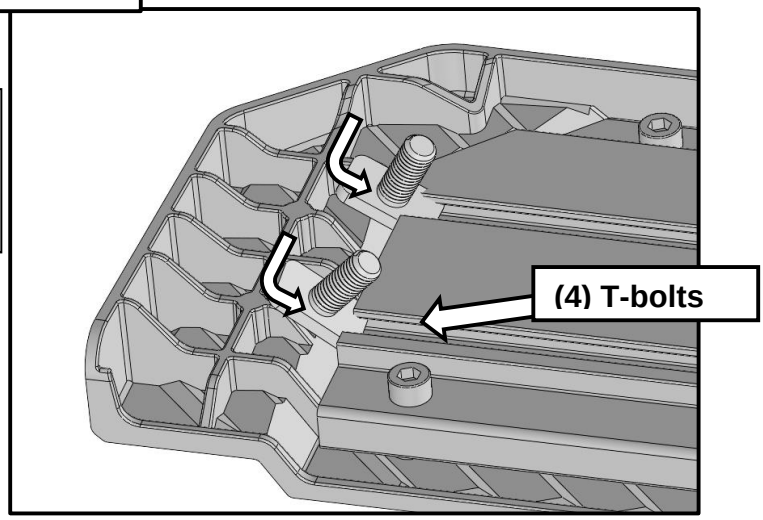

trailfortress.com/rough-country-retractable-bed-step-pw049818

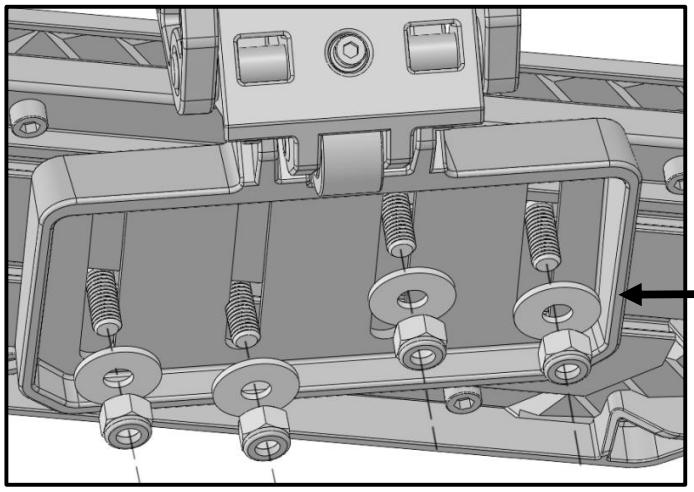

(Fig 6) Attach Step Pad to Corner Step Base

(4) 8mm Flat Washers
(4) 8mm Nylon Lock Nuts

(Fig 7) The step pad can be adjusted to the user liking





Complete Installation

Note: Excess dirt & debris may prevent from functioning properly. Simply clean the dirt off with after periodically to maintain optimal condition of corner step.

By purchasing any item sold by Rough Country, LLC, the buyer expressly warrants that he/she is in compliance with all applicable, State, and Local laws and regulations regarding the purchase, ownership, and use of the item. It shall be the buyers responsibility to comply with all Federal, State and Local laws governing the sales of any items listed, illustrated or sold. The buyer expressly agrees to indemnify and hold harmless Rough Country, LLC for all claims resulting directly or indirectly from the purchase, ownership, or use of the items.

trailfortress.com/rough-country-retractable-bed-step-pw049818