TRAIL FORTRESS

BUILT FOR THE TRAIL. CHECKED FOR YOUR TRUCK.

Rough Country PW049802 Installation Instructions

Retractable Bed Step for Silverado & Sierra HD (2020–2025)

Part number: PW049802

trailfortress.com/rough-country-retractable-bed-step-pw049802

Scan for fitment, price and install help

ROUGH COUNTRY
SUSPENSION SYSTEMS®

20-24 Chevy Silverado 2500/3500 Manual Bed Step

Thank you for choosing Rough Country for your suspension needs.

Rough Country recommends a certified technician install this system. In addition to these instructions, professional knowledge of disassembly/reassembly procedures as well as post installation checks must be known. Attempts to install this system without this knowledge and expertise may jeopardize the integrity and/or operating safety of the vehicle. Please read instructions before beginning installation. Check the kit hardware against the parts list on this page and the product layout on the last page. Be sure you have all needed parts and know where they go. Also please review tools needed list and make sure you have needed tools.

⚠WARNING

PRODUCT USE INFORMATION

Rough Country makes no claims regarding lifting devices and excludes any and all implied claims. We will not be responsible for any product that is altered.

If questions exist we will be happy to answer any questions concerning the design, function, and correct use of our products.

⚠NOTICE

NOTICE TO DEALER AND VEHICLE OWNER

Any vehicle equipped with any Rough Country product should have a “Warning to Driver” decal installed on the inside of the windshield or on the vehicle’s dash. The decal should act as a constant reminder for whoever is operating the vehicle of its unique handling characteristics. Re-torque all installed hardware as often as possible to ensure safe operation.

INSTALLING DEALER - it is your responsibility to install the warning decal and forward these installation instructions on to the vehicle owner for review. These instructions should be kept in the vehicle for its service







Torque Specs:

Size	Grade 5	Grade 8	Size	Class 8.8	Class 10.9
5/16"	15 ft/lbs	20ft/lbs	6MM	5ft/lbs	9ft/lbs
3/8"	30 ft/lbs	35ft/lbs	8MM	18ft/lbs	23ft/lbs
7/16"	45 ft/lbs	60ft/lbs	10MM	32ft/lbs	45ft/lbs
1/2"	65 ft/lbs	90ft/lbs	12MM	55ft/lbs	75ft/lbs
9/16"	95 ft/lbs	130ft/lbs	14MM	85ft/lbs	120ft/lbs
5/8"	135ft/lbs	175ft/lbs	16MM	130ft/lbs	165ft/lbs
3/4"	185ft/lbs	280ft/lbs	18MM	170ft/lbs	240ft/lbs

INSTALLATION INSTRUCTIONS

PARTS LIST:

Qty	Item Description	Qty	Item Description
1	Base Arm	6	8-1.25mm x 25mm Combo Bolts
1	Step Pad	1	8mm Lock Washer
1	Main Bracket	1	8-1.25mm x 20mm Hex Bolt
1	Support Bracket	4	8mm Nylon Lock Nuts
1	Bumper Support Bracket	5	8mm x 24mm x 2mm Flat Washers
		4	8-1.25mm x 20mm T-bolts

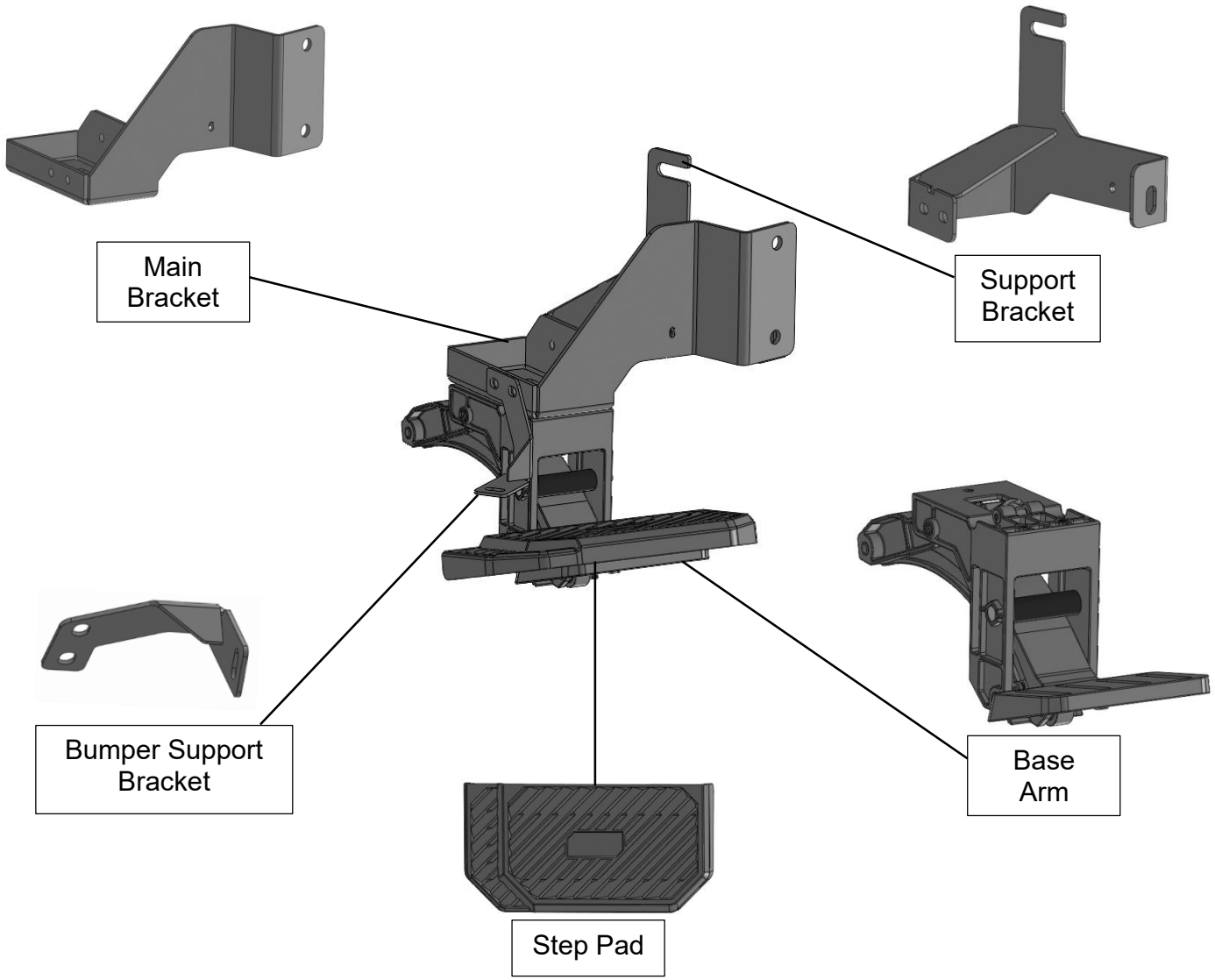

trailfortress.com/rough-country-retractable-bed-step-pw049802

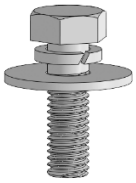

8mm Combo Bolt



T-Bolt



Flat Washer



Nylon Lock Nut



Lock Washer

TOOLS REQUIRED



Rachet



13mm Socket



Extensions



Wrench

1 Follow (Fig 1 – 8) to attach the assembly to Rear Driver Side Bumper.

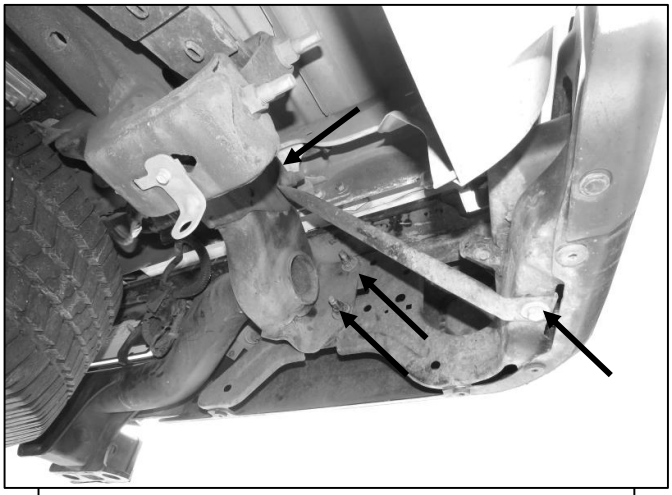

(Fig 1) Start at Driver Side rear bumper. Remove (2) Nuts attached to Bumper. Remove (1) Nut attached the Frame and (1) Bumper Support Bolt to remove Bumper Support Bar. Hardware will be reused later.

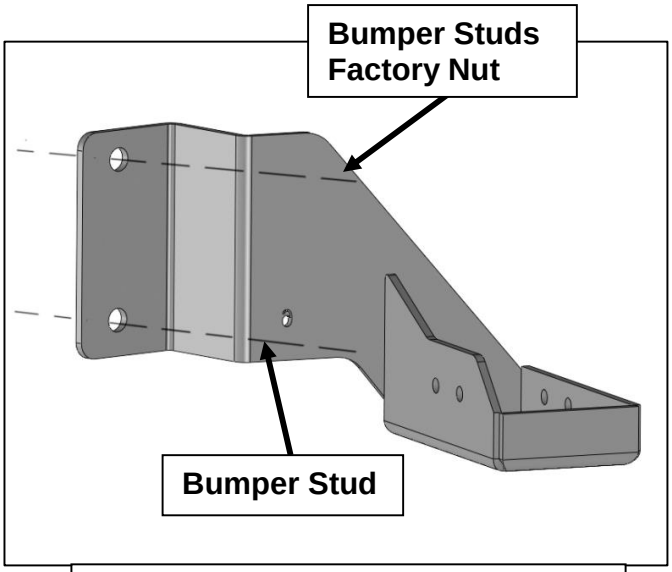

(Fig 2) Attach Main Bracket to Bumper Studs, and refasten the Bumper Nuts to top Bumper Stud only.

trailfortress.com/rough-country-retractable-bed-step-pw049802

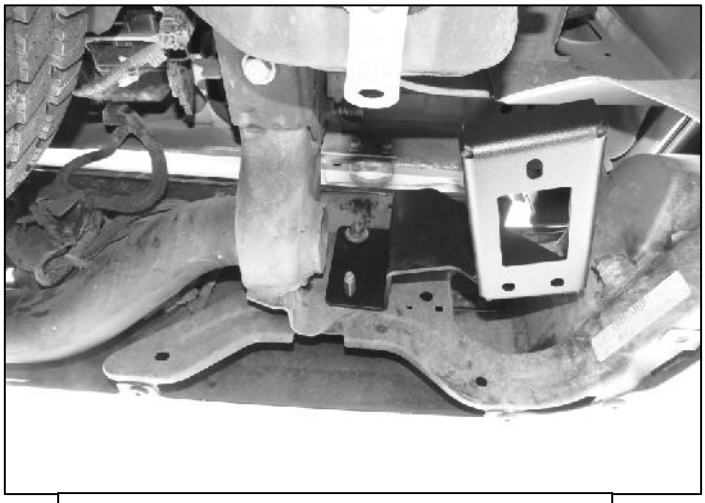

(Fig 3) Attached Main Bracket

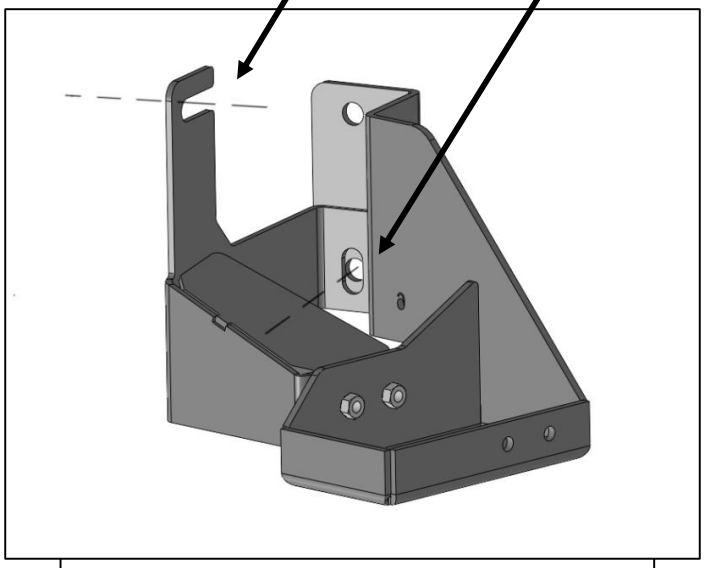

(Fig 4) Attach Support Bracket to Bottom Bumper Stud over Main Bracket, and the Frame Stud. Reuse Frame Nut to fasten top section. Do not tighten at this time.

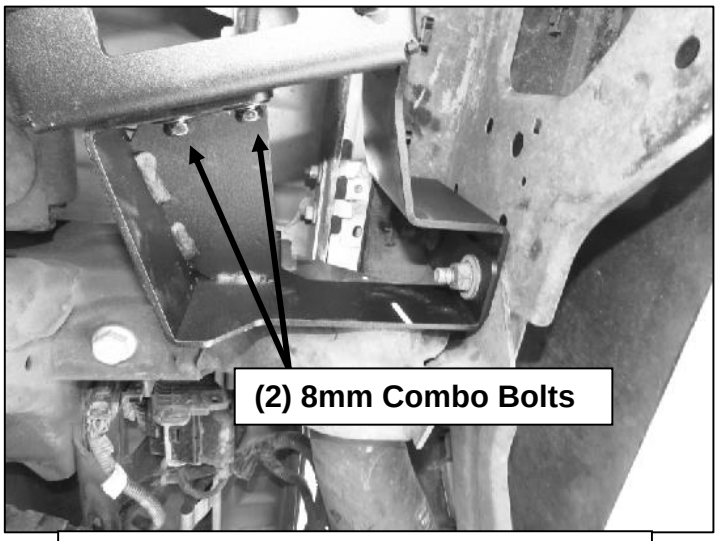

(Fig 5) Attach Support Bracket to Main Bracket using indicated hardware.

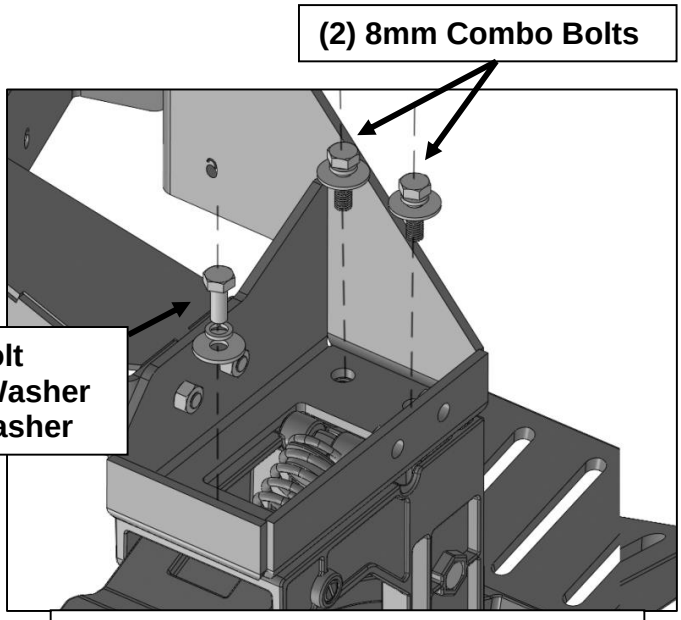

(Fig 6) Attach base arm to Main Bracket using indicated hardware

trailfortress.com/rough-country-retractable-bed-step-pw049802

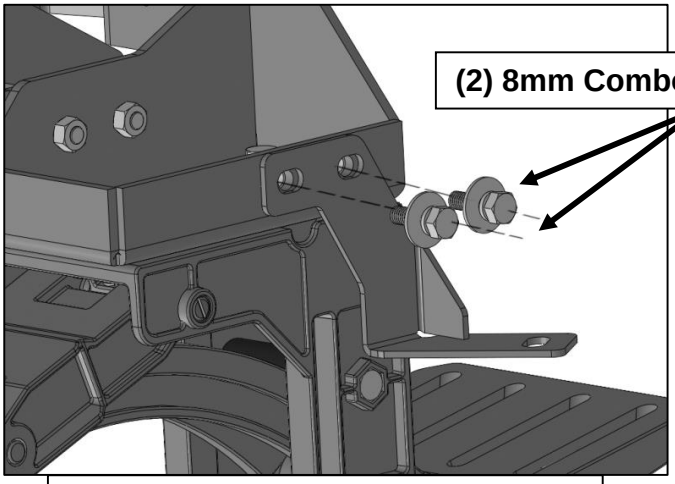

(Fig 7) Attach Bumper Support Bracket to Main Bracket using indicated hardware

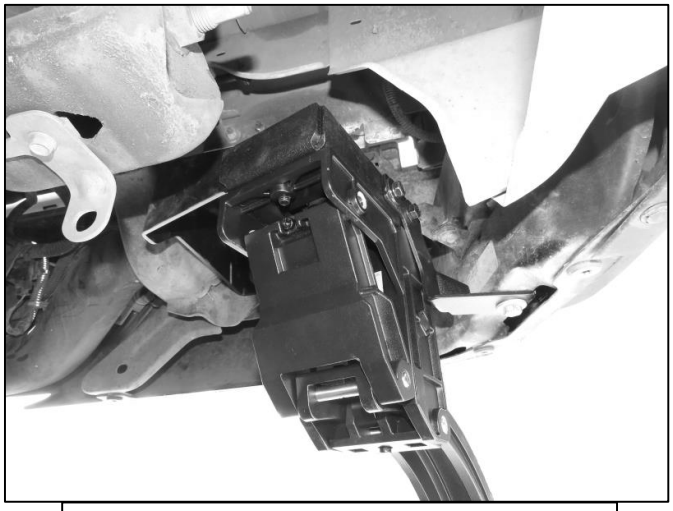

(Fig 8) Attached Base Arm and Bumper Support Bracket

2

Follow (Fig 9 – 10) to install Step Pad onto Assembly Base. Installation is complete. Do periodic inspections to the installation to make sure that all hardware is secure and tight.
Note: Excess dirt and debris may prevent the step from functioning properly. Simply clean the dirt off with water to maintain optimal condition of Corner Step.

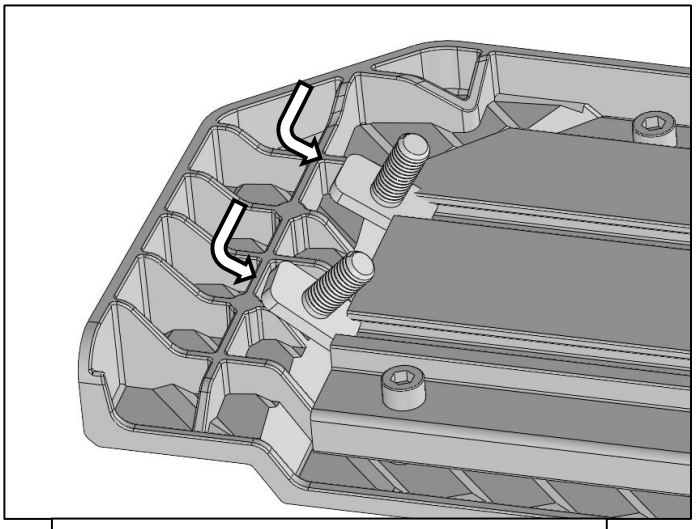

(Fig 9) Slide (2) T-Bolts into each Step Pad channel

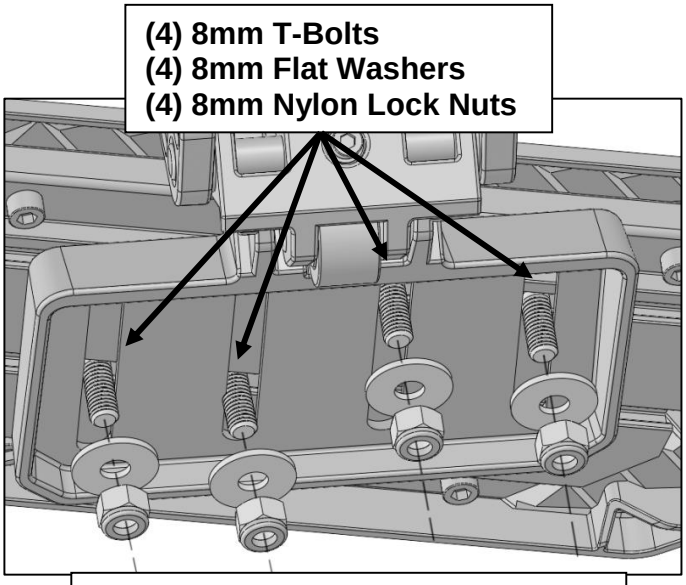

(Fig 10) Attach Step Pad onto Base Arm using indicated hardware

trailfortress.com/rough-country-retractable-bed-step-pw049802





trailfortress.com/rough-country-retractable-bed-step-pw049802