# Rough Country PW049798 Installation Instructions

Retractable Bed Step: 6-Inch Aluminum, Driver Side

Part number: PW049798

trailfortress.com/rough-country-retractable-bed-step-pw049798

Scan for fitment, price and install help

# 2019-24 GM 1500 Trucks Manual Bed Step

**Thank you for choosing Rough Country for your suspension needs.**

Rough Country recommends a certified technician install this system. In addition to these instructions, professional knowledge of disassembly/reassembly procedures as well as post installation checks must be known. Attempts to install this system without this knowledge and expertise may jeopardize the integrity and/or operating safety of the vehicle. Please read instructions before beginning installation. Check the kit hardware against the parts list on this page and the product layout on the last page. Be sure you have all needed parts and know where they go. Also please review tools needed list and make sure you have needed tools.

**⚠WARNING**

## PRODUCT USE INFORMATION

Rough Country makes no claims regarding lifting devices and excludes any and all implied claims. We will not be responsible for any product that is altered.

If questions exist we will be happy to answer any questions concerning the design, function, and correct use of our products.

## NOTICE TO DEALER AND VEHICLE OWNER

**⚠NOTICE**

Any vehicle equipped with any Rough Country product should have a “Warning to Driver” decal installed on the inside of the windshield or on the vehicle’s dash. The decal should act as a constant reminder for whoever is operating the vehicle of its unique handling characteristics. Re-torque all installed hardware as often as possible to ensure safe operation.

INSTALLING DEALER - it is your responsibility to install the warning decal and forward these installation instructions on to the vehicle owner for review. These instructions should be kept in the vehicle for its service








**Torque Specs:**

| Size | Grade 5 | Grade 8 | Size | Class 8.8 | Class 10.9 |
|---|---|---|---|---|---|
| 5/16" | 15 ft/lbs | 20ft/lbs | 6MM | 5ft/lbs | 9ft/lbs |
| 3/8" | 30 ft/lbs | 35ft/lbs | 8MM | 18ft/lbs | 23ft/lbs |
| 7/16" | 45 ft/lbs | 60ft/lbs | 10MM | 32ft/lbs | 45ft/lbs |
| 1/2" | 65 ft/lbs | 90ft/lbs | 12MM | 55ft/lbs | 75ft/lbs |
| 9/16" | 95 ft/lbs | 130ft/lbs | 14MM | 85ft/lbs | 120ft/lbs |
| 5/8" | 135ft/lbs | 175ft/lbs | 16MM | 130ft/lbs | 165ft/lbs |
| 3/4" | 185ft/lbs | 280ft/lbs | 18MM | 170ft/lbs | 240ft/lbs |

**PARTS LIST:**

| Qty | Item Description | Qty | Item Description |
|---|---|---|---|
| 1 | Corner Step Base | 1 | 8-1.25mm x 20mm Hex Bolt |
| 1 | Support Bracket | 4 | 8mm Hex Nuts |
| 1 | Mounting Bracket | 5 | 8mm x 24mm x 2mm Flat Washers |
| 1 | Step Pad | 4 | 8-1.25mm x 20mm T-bolts |
| 1 | 8mm Lock Washer | 4 | 8mm Combo Bolts |

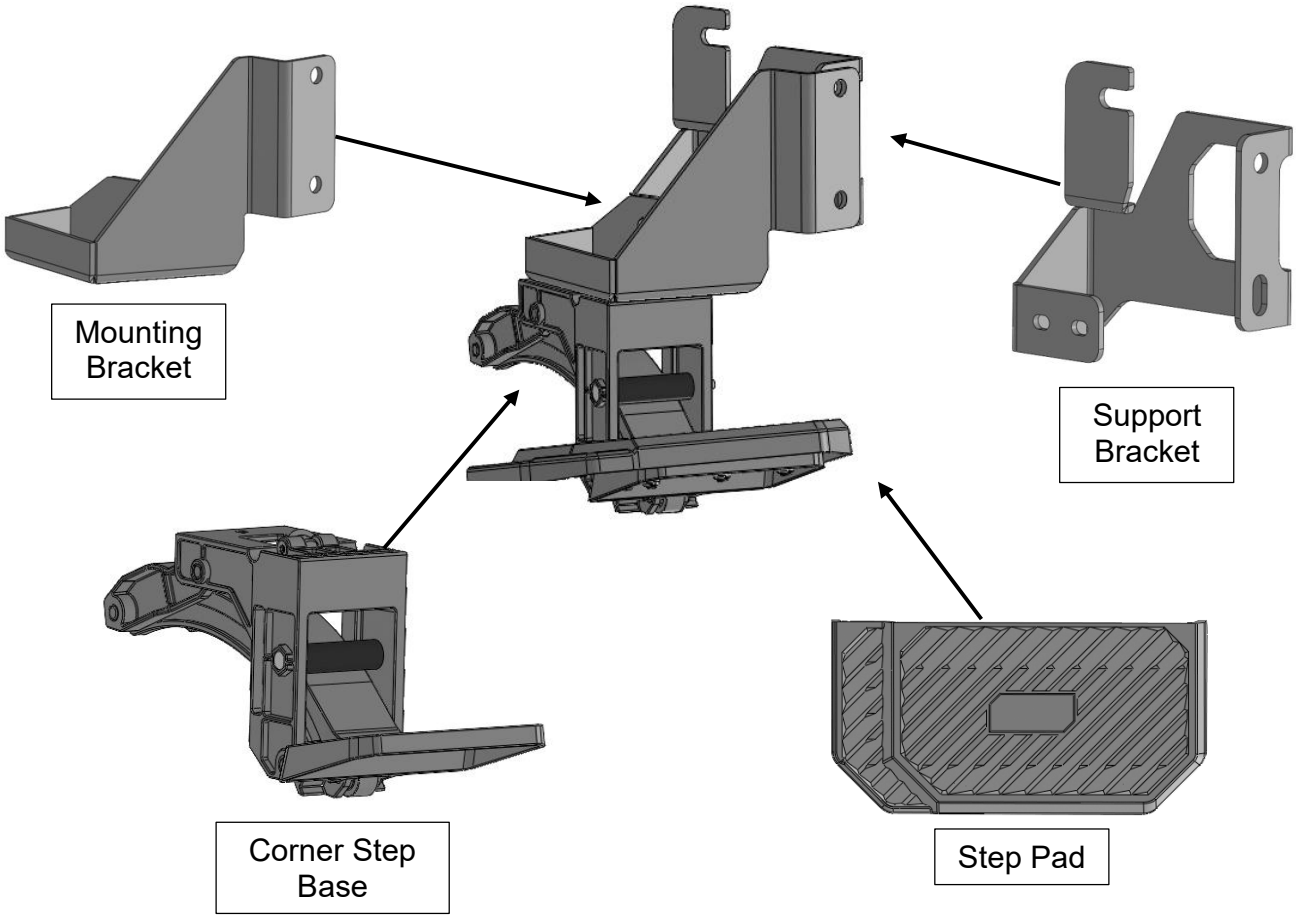


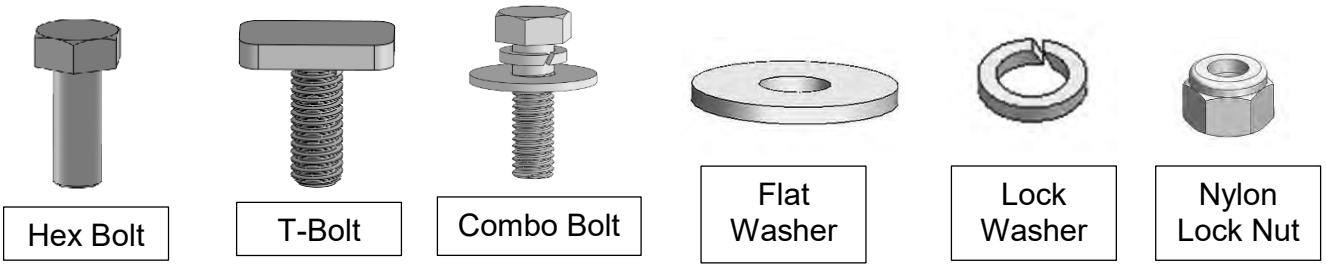

## TOOLS REQUIRED

|  Rachet |  Socket |  Extensions |  Wrench |
|---|---|---|---|

**1** Follow (Fig 1 – 7) to attach the Corner Step to the frame and bumper. **Do not fully tighten hardware at this time.**

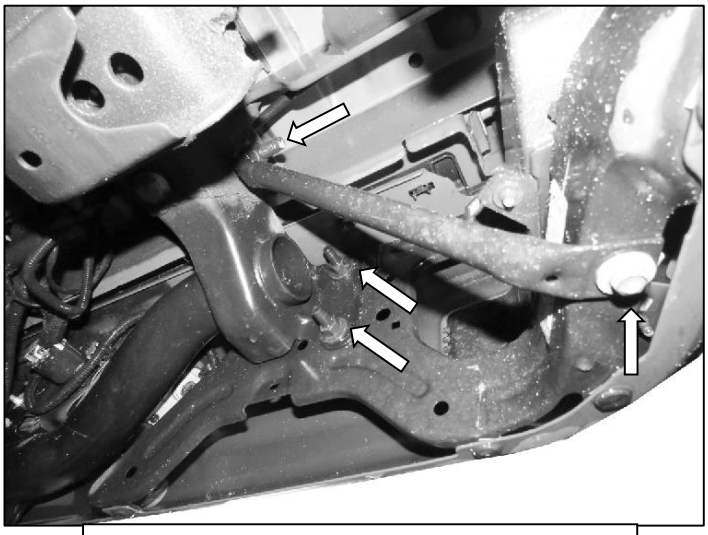

**(Fig 1) Remove two factory nuts from bumper mounting point. Remove the bumper support bar.**

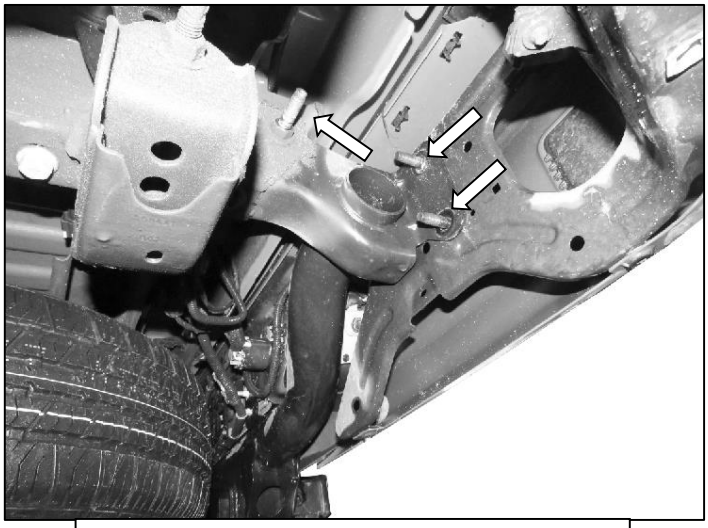

**(Fig 2) Factory nuts removed. Bumper Support Bar removed. Reuse the bumper and frame studs (arrows).**

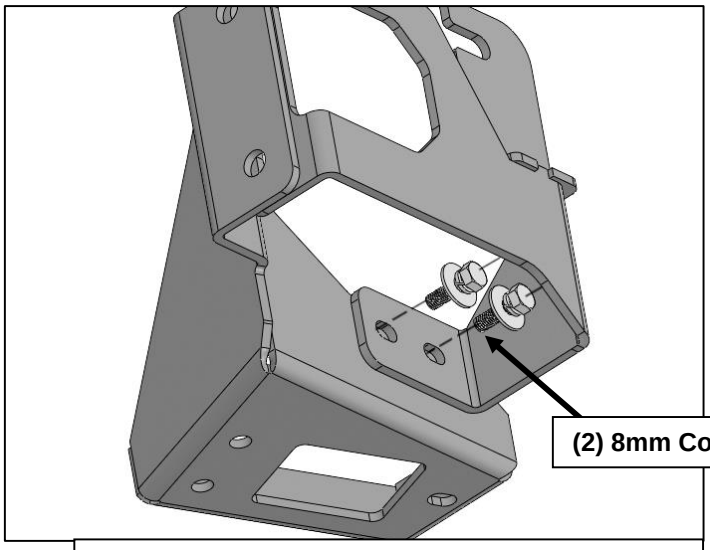


**(Fig 3) Attach Support Bracket and Mounting Bracket together using indicated hardware. Do not fully tighten at this time.**

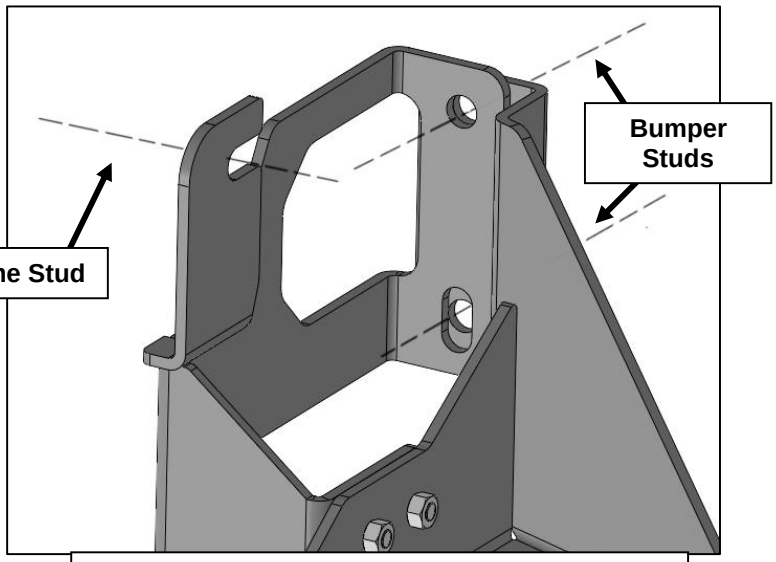


(Fig 4) Insert Bracket Assembly to Mounting Studs, and reuse factory hardware to mount Bracket Assembly.

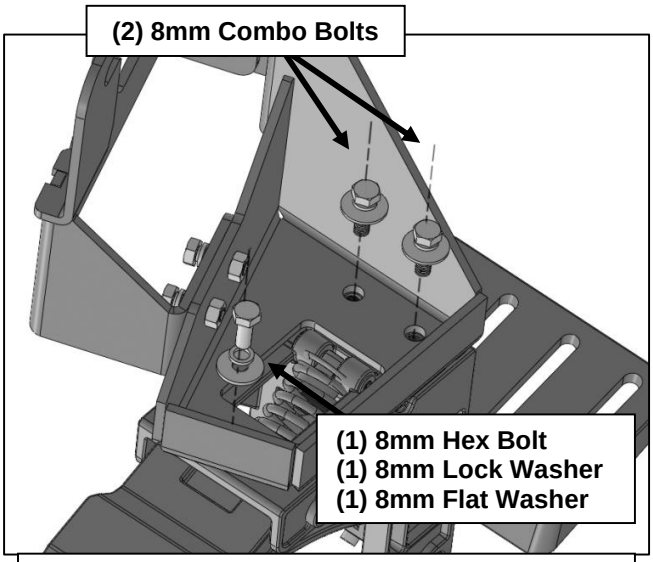


(Fig 5) Attach Corner Step Base Component to Bracket Assembly using indicated hardware.

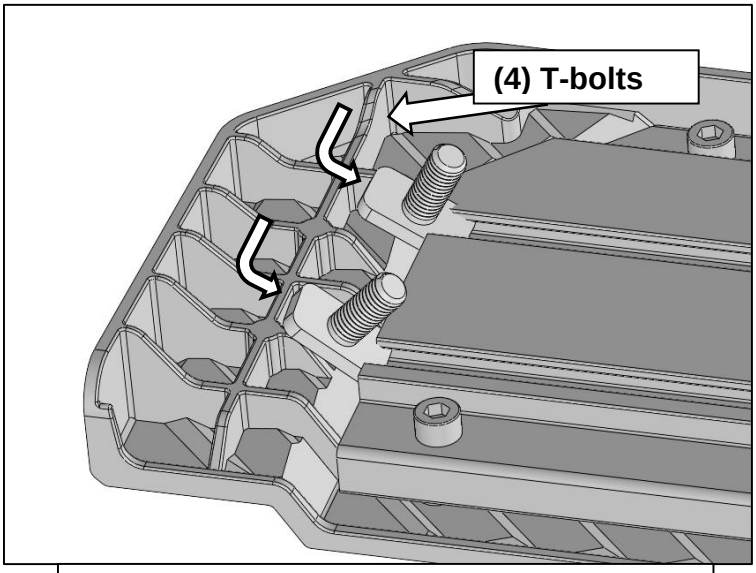


(Fig 6) Slide in T-bolts through open ends of the channels underside of Step Pad (two T-bolts per channel)

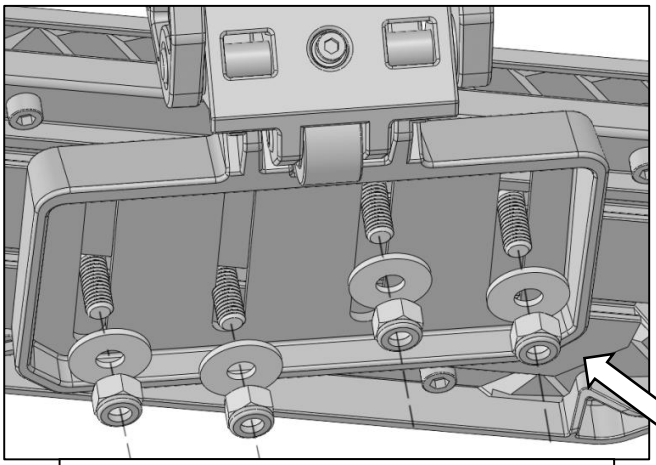


(Fig 7) Attach Step Pad to Corner Step Base.

**Tighten all hardware at this time to the preferred position.** Do periodic inspections to the installation to make sure that all hardware is secure and tight.

**Note:** Excess dirt and debris may prevent the step from functioning properly. Simply clean the dirt off with water to maintain optimal condition of Corner Step.




