TRAIL FORTRESS

BUILT FOR THE TRAIL. CHECKED FOR YOUR TRUCK.

Rough Country PW044434 Installation Instructions

Retractable Bed Step for 2015–2020 Ford F-150

Part number: PW044434

trailfortress.com/rough-country-retractable-bed-step-pw044434

Scan for fitment, price and install help

ROUGH COUNTRY SUSPENSION SYSTEMS®

FORD 2015-20 F150 Manual Bed Step

Thank you for choosing Rough Country for your suspension needs.

Rough Country recommends a certified technician install this system. In addition to these instructions, professional knowledge of disassembly/reassembly procedures as well as post installation checks must be known. Attempts to install this system without this knowledge and expertise may jeopardize the integrity and/or operating safety of the vehicle. Please read instructions before beginning installation. Check the kit hardware against the parts list on this page and the product layout on the last page. Be sure you have all needed parts and know where they go. Also please review tools needed list and make sure you have needed tools.

⚠WARNING

PRODUCT USE INFORMATION

Rough Country makes no claims regarding lifting devices and excludes any and all implied claims. We will not be responsible for any product that is altered.

If questions exist we will be happy to answer any questions concerning the design, function, and correct use of our products.

⚠NOTICE

NOTICE TO DEALER AND VEHICLE OWNER

Any vehicle equipped with any Rough Country product should have a “Warning to Driver” decal installed on the inside of the windshield or on the vehicle’s dash. The decal should act as a constant reminder for whoever is operating the vehicle of its unique handling characteristics. Re-torque all installed hardware as often as possible to ensure safe operation.

INSTALLING DEALER - it is your responsibility to install the warning decal and forward these installation instructions on to the vehicle owner for review. These instructions should be kept in the vehicle for its service







Torque Specs:

Size	Grade 5	Grade 8	Size	Class 8.8	Class 10.9
5/16"	15 ft/lbs	20ft/lbs	6MM	5ft/lbs	9ft/lbs
3/8"	30 ft/lbs	35ft/lbs	8MM	18ft/lbs	23ft/lbs
7/16"	45 ft/lbs	60ft/lbs	10MM	32ft/lbs	45ft/lbs
1/2"	65 ft/lbs	90ft/lbs	12MM	55ft/lbs	75ft/lbs
9/16"	95 ft/lbs	130ft/lbs	14MM	85ft/lbs	120ft/lbs
5/8"	135ft/lbs	175ft/lbs	16MM	130ft/lbs	165ft/lbs
3/4"	185ft/lbs	280ft/lbs	18MM	170ft/lbs	240ft/lbs

PARTS LIST:

Hardware	Quantity
Linkage Arm Assembly	1
Support Bracket	1
Mounting Bracket	1
Die cast Aluminum Step pad	1
8-1.25mm x 25mm Hex Combo Bolts	4
8mm lock washers	3
8-1.25mm x 20mm Hex Bolt	1
8mm Hex Self-locked Nuts	4
8mm x 24mm x 2mm Flat Washers	7
8mm-1.25mm x 20mm T Bolt	4
8mm-1.25mm x 30mm Hex Bolts	2

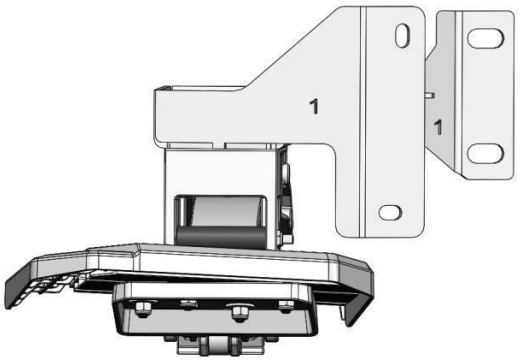

Support Bracket | Mounting Bracket | Linkage Arm Assembly | Step Pad

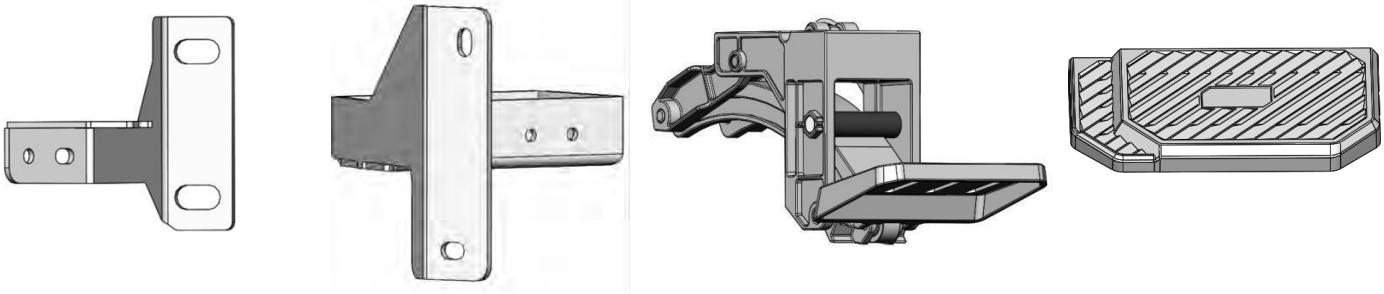



Lock Washer | Flat Washer | Hex Bolt | Combo Bolt | Lock Nut | T-Bolt

trailfortress.com/rough-country-retractable-bed-step-pw044434

TOOLS REQUIRED

 Rachet	 21mm Socket 13mm Socket	 Extensions

1 Follow (Fig 1 – 2) to assemble the corner step before mounting to vehicle.

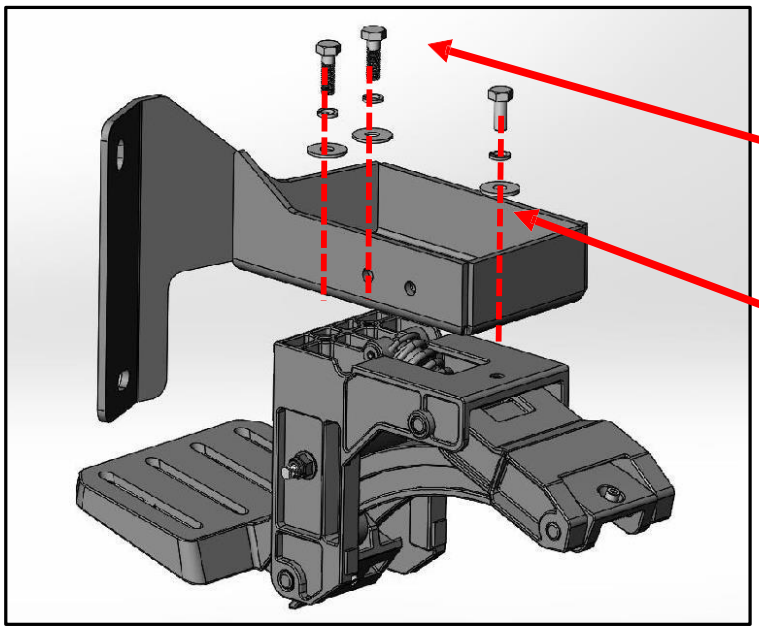

(Fig 1) Attach mounting bracket to the linkage arm assembly

(2) 8mm x 25mm combo Bolts

(1) 8mm x 20mm Hex Bolt
(1) 8mm Lock Washer
(1) 8mm Flat Washer

(Fig 2) Attach support bracket to the mounting bracket

(2) 8mm x 25mm combo Bolts

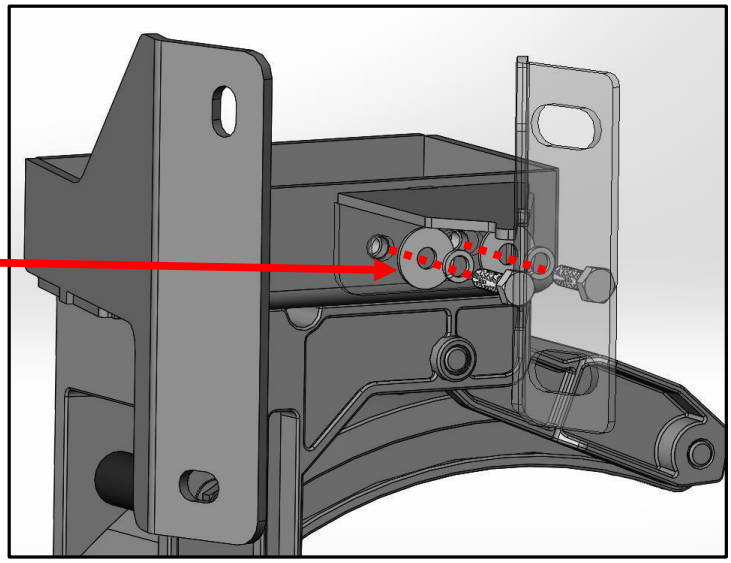

trailfortress.com/rough-country-retractable-bed-step-pw044434

2 Follow (Fig 3 – 5) to install the corner step to the frame and bumper of the vehicle.
Note: Excess dirt and debris may prevent the step from functioning properly. Simply clean the dirt off with water to maintain optimal condition of Corner Step.

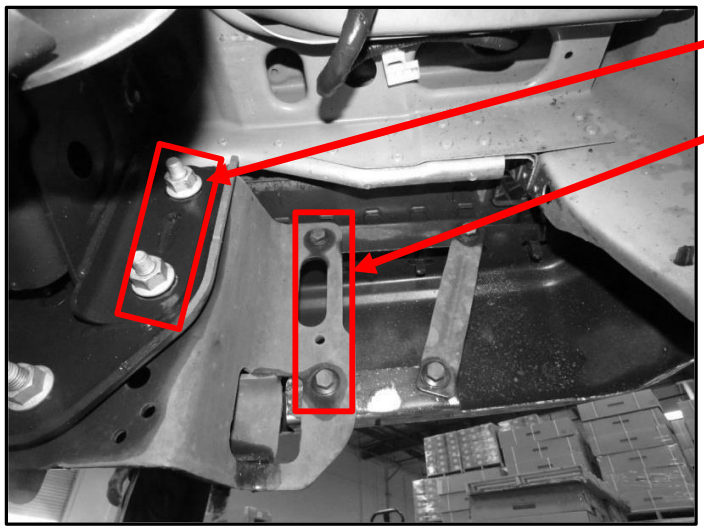

(Fig 3) Starting at the DS rear remove the (2) OEM 21mm flanged hex nuts & the (2) OEM 13mm flanged hex bolts

(Fig 4) Mount the support bracket to the frame using the OEM 12mm studs and 21mm flanged hex nuts

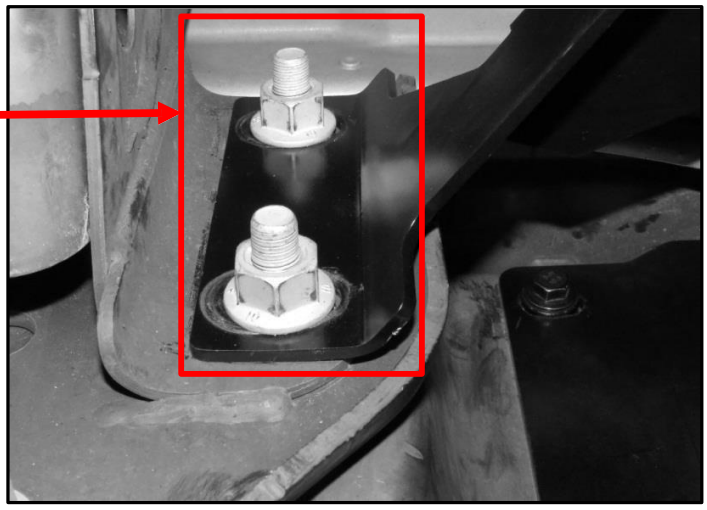

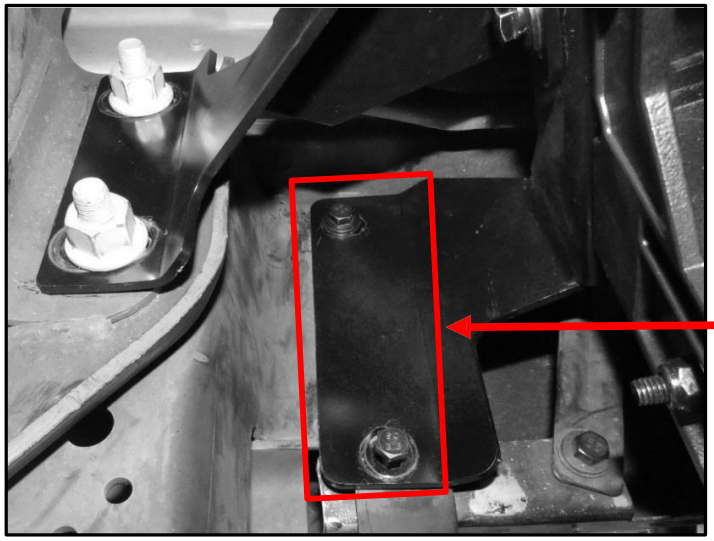

(Fig 5) Mount the mounting bracket to the bumper

(2) 8mm x 30mm Hex Bolt
(2) 8mm Lock Washer
(2) 8mm Flat Washer

trailfortress.com/rough-country-retractable-bed-step-pw044434

3 Follow (Fig 6-8) to install the step pad to the linkage arm assembly.

(Fig 6) Slide in T-bolts through open ends of the channels underside of Step Pad (two T-bolts per channel)

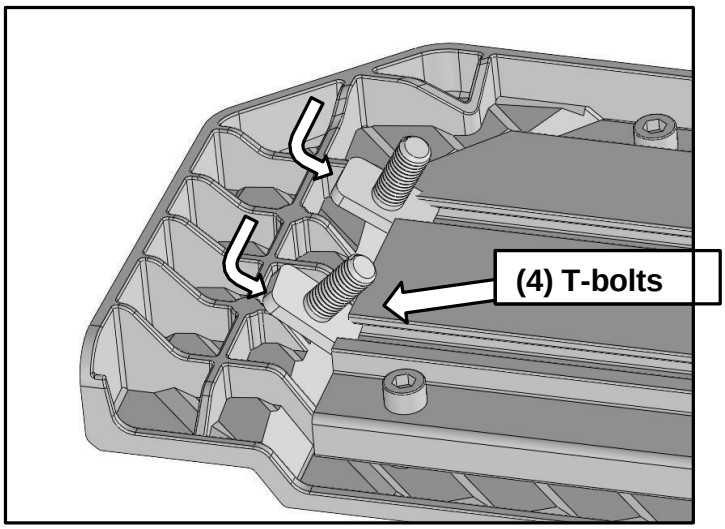

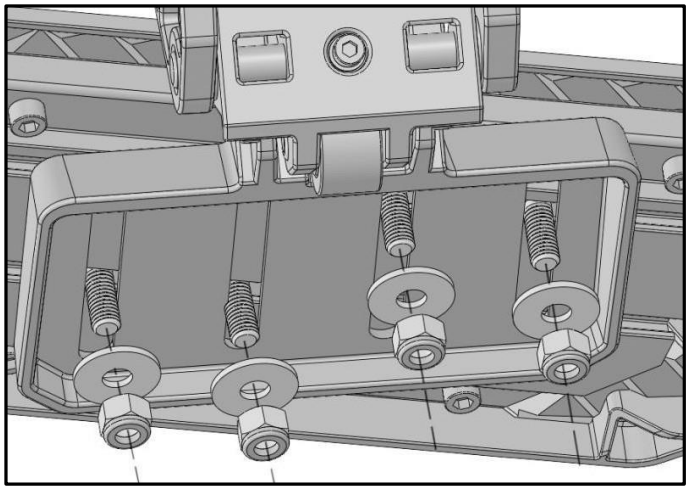

(Fig 7) Attach Step Pad to Corner Step Base

(4) 8mm Flat Washers
(4) 8mm Nylon Lock Nuts

(Fig 8) The step pad can be adjusted to the user liking

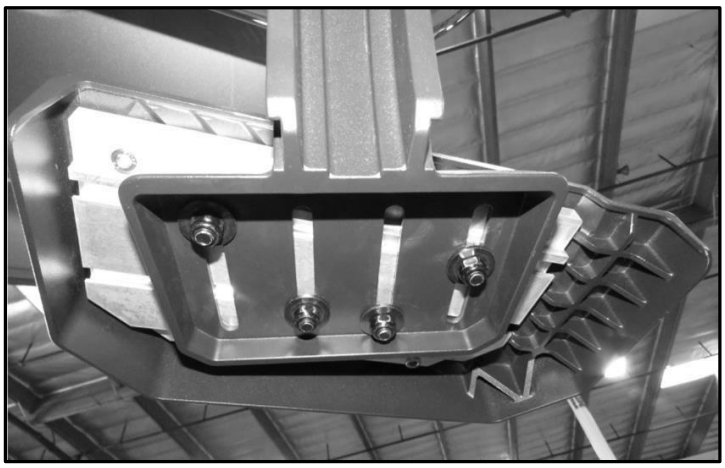

trailfortress.com/rough-country-retractable-bed-step-pw044434

Complete Installation



