TRAIL FORTRESS

BUILT FOR THE TRAIL. CHECKED FOR YOUR TRUCK.

Rough Country PSR9015 Installation Instructions

Power Running Boards for Ram 2500/3500 Crew Cab (2011-2023)

Part number: PSR9015

trailfortress.com/rough-country-power-running-boards-psr9015

Scan for fitment, price and install help

PSR090910

2010-23 Ram 2500/3500 Crew Cab

Thank you for choosing Rough Country for all your vehicle needs.

Please read instructions before beginning installation. Check the kit hardware against the kit contents shown below. Be sure you have all needed parts and know where they go.
If questions exist, please call us @1-800-222-7023. We will be happy to answer any questions concerning this product.
Check all fasteners for proper torque. Check to ensure for adequate clearance between all components.
Periodically check all hardware for tightness.

KIT CONTENTS:
Front Motor Left x1
Rear Motor Left x1
Rear Motor Right x1
Front Motor Right x1
Power Board Switch x1
Nut Plate x5
Drilling Template x1
Controller Assembly x1
Control Input Wiring Harness x1
Step Boards x2
LED Lights x4

Wired Magnetic Sensors Module x2
Magnet x4

TOOLS NEEDED:
5mm Allen
8mm Socket
10mm Socket
Rivet Tool
Ratchet
Torque Wrench
Drill Motor
No.30 or 1/8” Drill
1/2” Drill
Weather Proof Tape

HARDWARE INCLUDED:
M8 x30 Hex Flange Bolt x8
M6 x20 Hex Flange Bolt x8
M8 x25 Hex Flange Bolt x2
M6 x25 Socket Cap Screw x8
Shim x8
Rivets x5
Wire Ties x25



Product Packing List

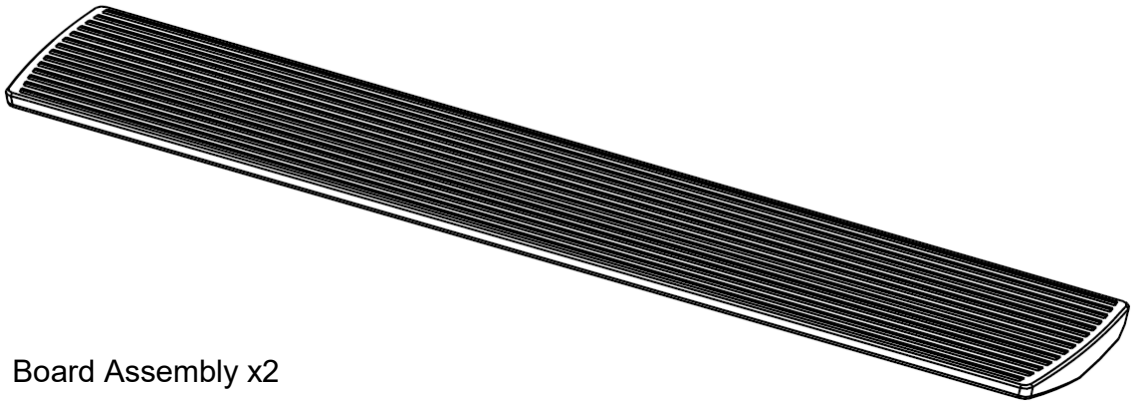

Board Assembly x2

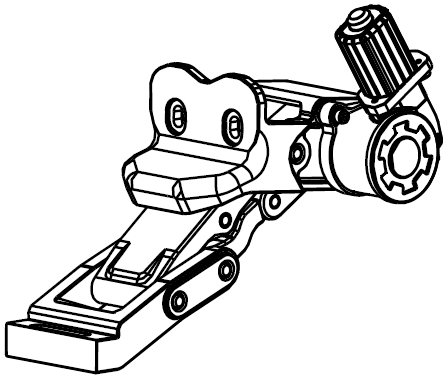

Front Left Motor x1
Driver Side

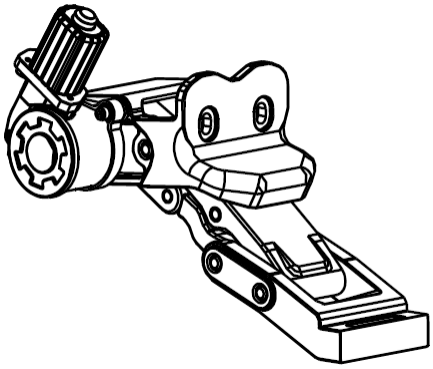

Rear Left Motor x1
Driver Side

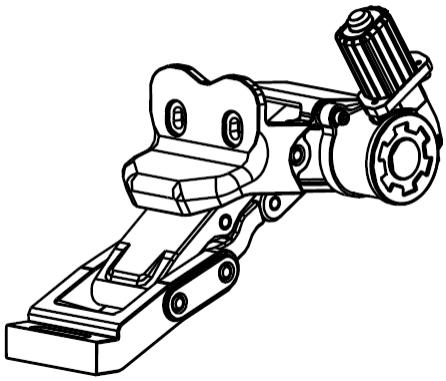

Rear Right Motor x1
Passenger Side

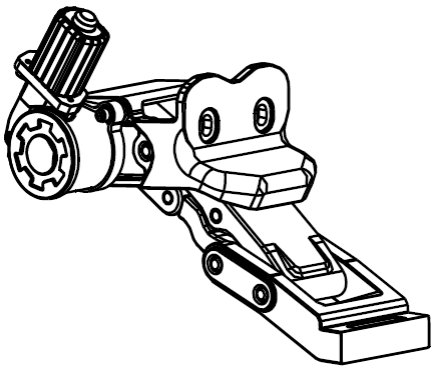

Front Right Motor x1
Passenger Side

trailfortress.com/rough-country-power-running-boards-psr9015

Product Packing List

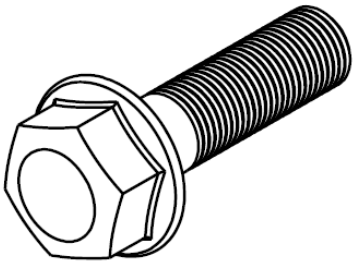

M8 x30 Hex Flange Bolt x8

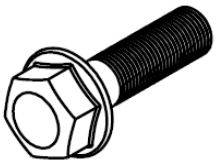

M6 x20 Hex Flange Bolt x8

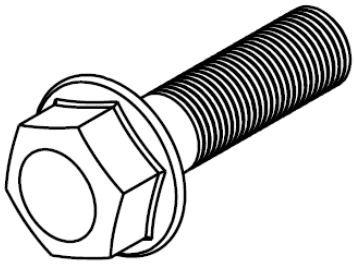

M8 x25 Hex Flange Bolt x2



M6 x25 Socket Cap Screw x8

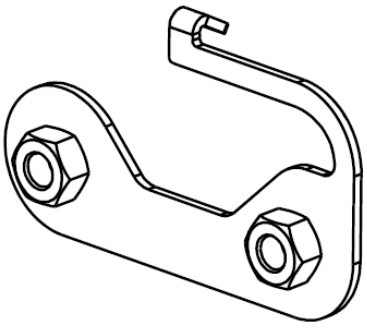

Nut Plate x5
Two nut plates are in reverse for the right side.

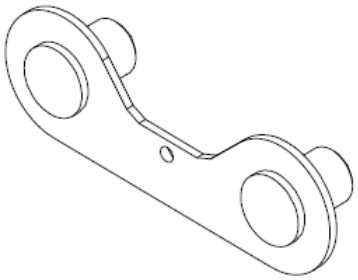

Drilling Template x1

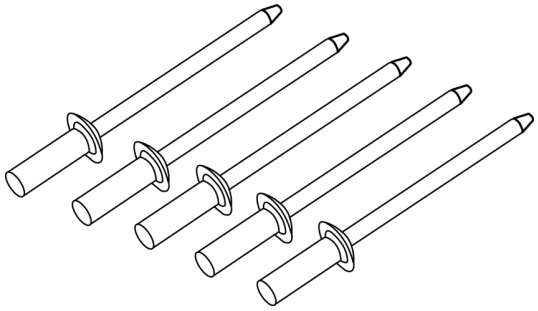

Rivets x5



Wire Tie x25

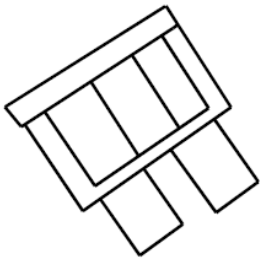

Fuse x2

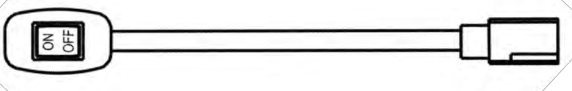

Power Board Switch x1

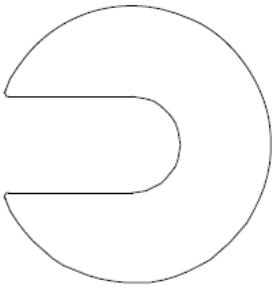

Shim x8

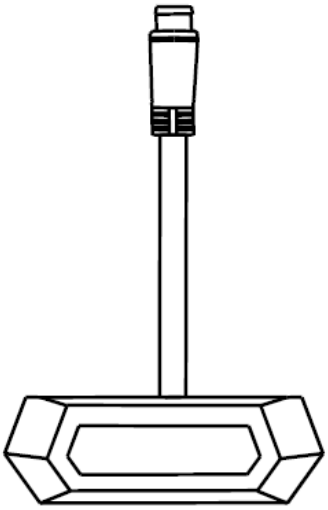

LED Lights x4

trailfortress.com/rough-country-power-running-boards-psr9015

Product Packing List

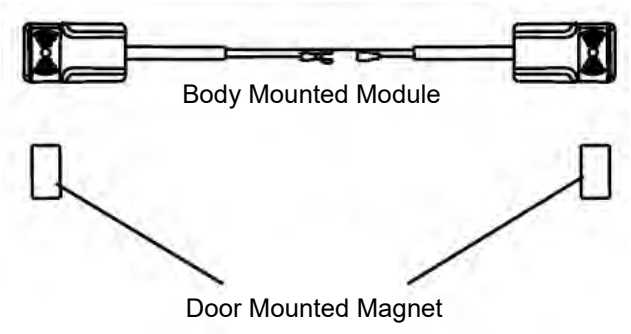

Body Mounted Module x2
Door Mounted Magnet x4

Controller Assembly x1

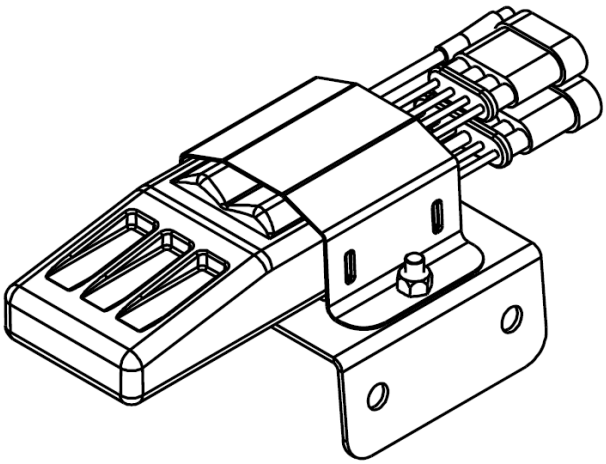

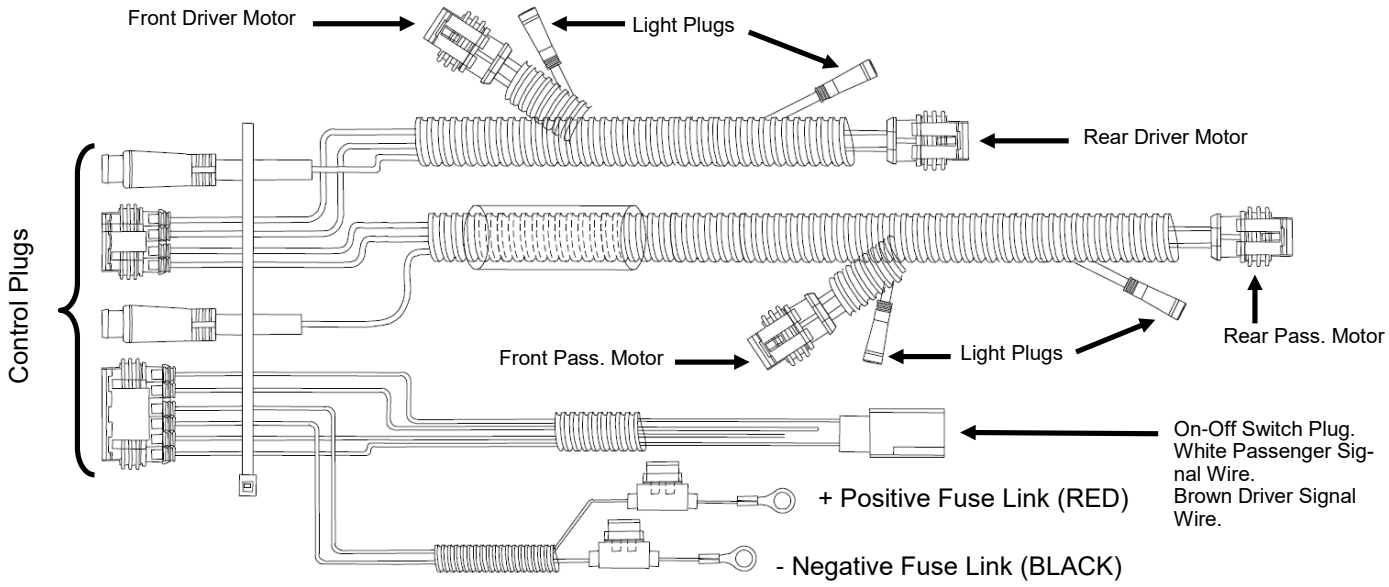

Wiring Harness x1

trailfortress.com/rough-country-power-running-boards-psr9015

Installation Position of the Driver Side Motors and Controller Assembly

Diagram shows the inner rocker panel on the driver side from beneath the vehicle.

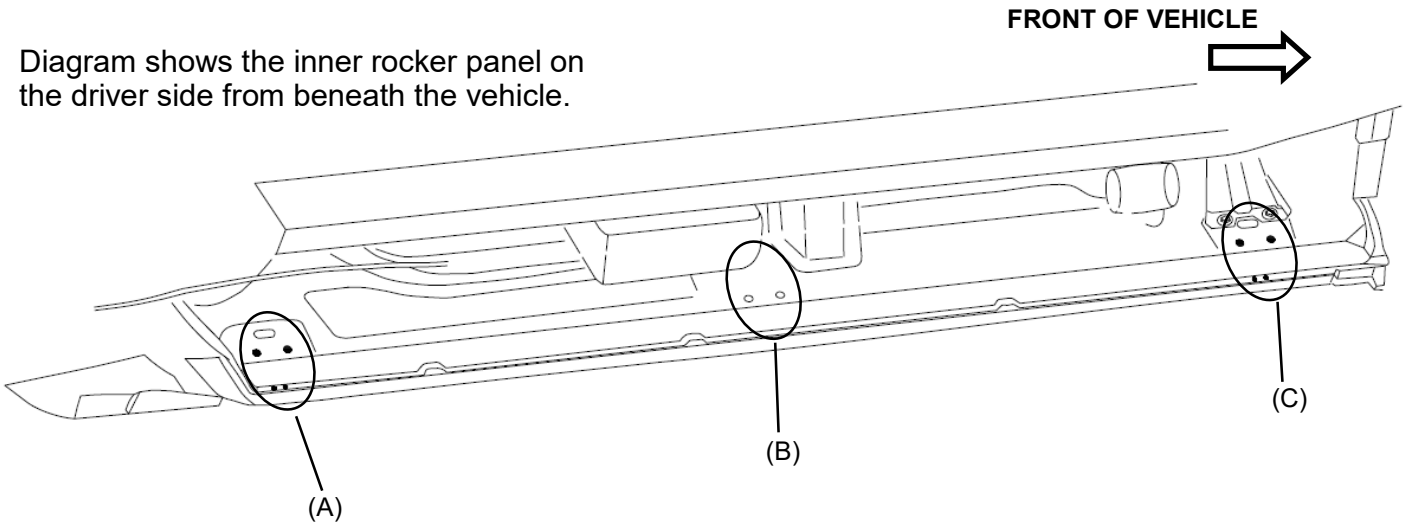

A. Installation Position for Rear Left Nut Plate and Motor (Driver Side)

B. Installation Position for the Center Nut Plate and Controller Assembly (Driver Side)

C. Installation Position for Front Left Nut Plate and Motor (Driver Side)

trailfortress.com/rough-country-power-running-boards-psr9015

Template Use

Photo 1

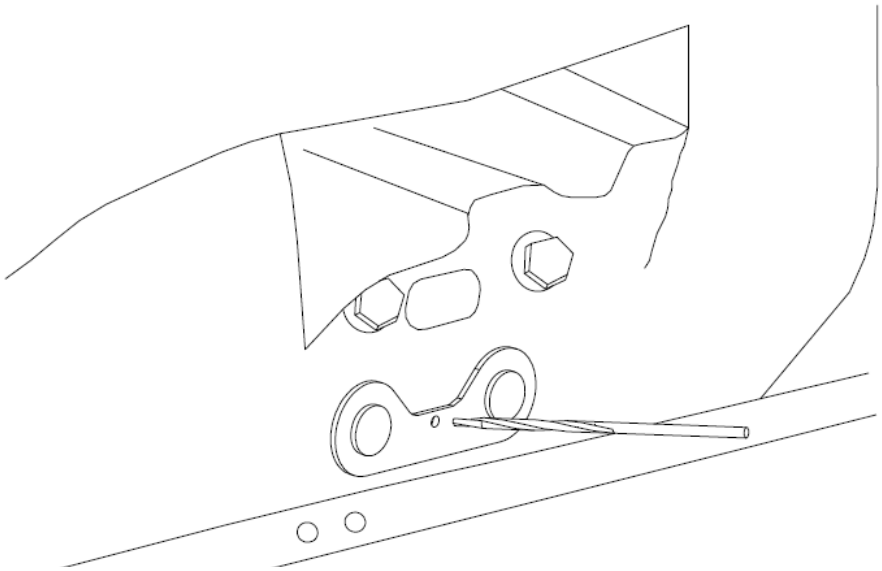

1. Place the drill template in the corresponding hole position with the notch to the top. Transfer the template hole to the inner rocker panel using a No.30 or (1/8”) drill. Repeat this process to the driver center and rear mounting location. **See Photo 1.**

NOTE: This template will be used on the (3) driver side mounts and the passenger side front and rear mounting locations.
NOTE: If the vehicle is equipped with threaded holes, the template and nut plates will not be used.

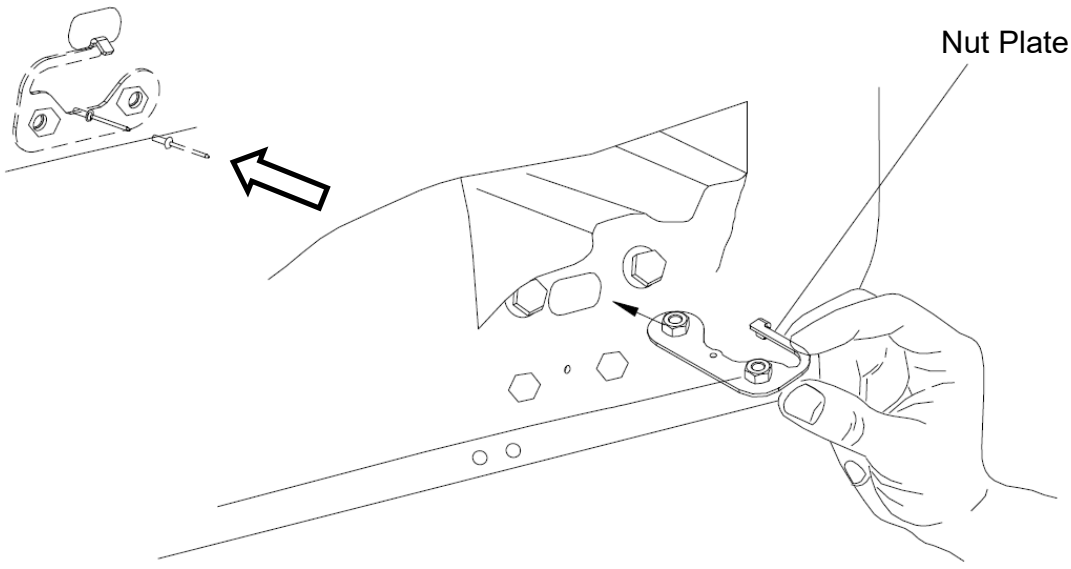

Photo 2

2. Insert the nut plate through the slotted hole and hang it on the edge of the hole. Align the hole in the nut plate and the pre-drilled template hole. Install the rivet into the nut plate, then seat the rivet using a rivet tool. Repeat this process to the driver rear mounting location. **See Photo 2.**

trailfortress.com/rough-country-power-running-boards-psr9015

Driver Front Motor Installation

Photo 3

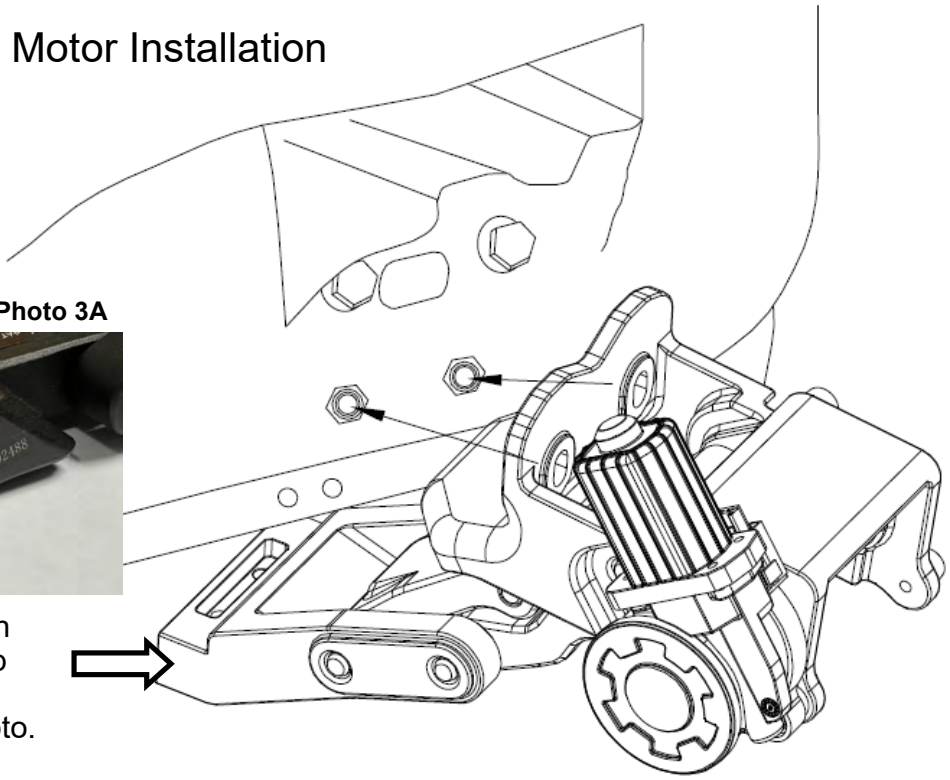

Photo 3A

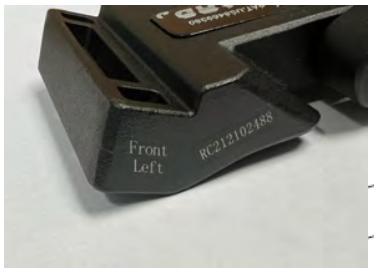

Mounting location found on the step board mount as shown in the photo.

3. Align the two slotted holes in the motor bracket to the previously installed nut plate in the body of the vehicle. **See Photo 3. NOTE:** Bracket placements are found on the step board mount of the motor bracket ***see photo 3A***.

Photo 4

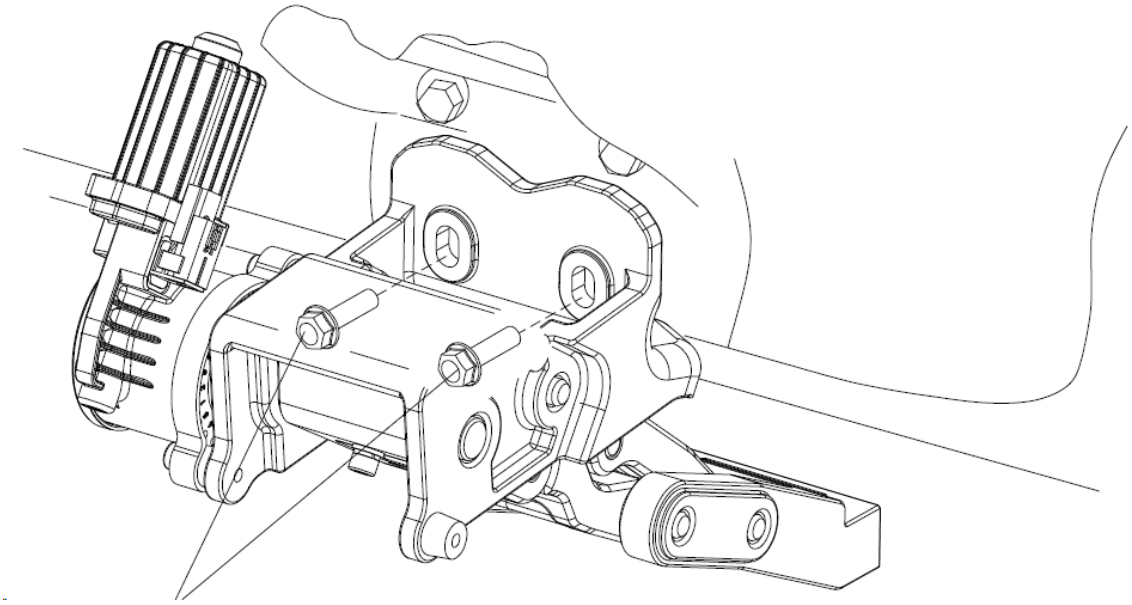

Hex Flange Bolt M8 x 30

4. Secure the motor bracket to the body of the vehicle using (2) of the supplied M8 x30 hex flange bolts. **See Photo 4.**

NOTE: Do not tighten at this time, snug only using a 10mm socket.

trailfortress.com/rough-country-power-running-boards-psr9015

Photo 5

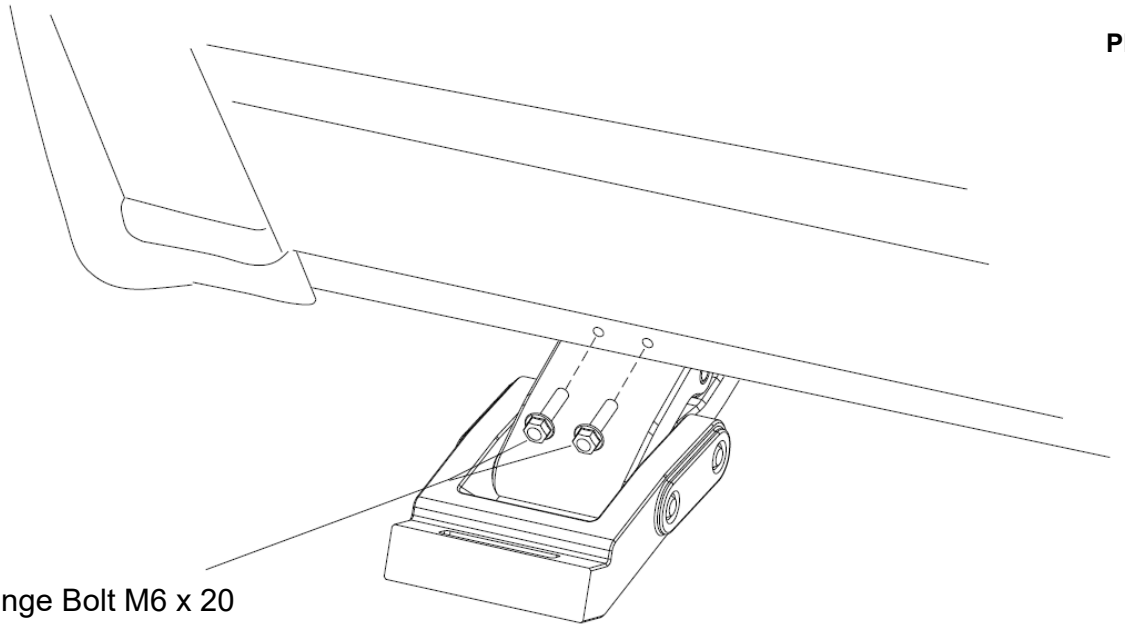

5. Secure the motor bracket using (2) of the supplied M6 x20 Hex Flange Bolts, through the pre existing holes in the pinch weld of the body to the threaded holes in the step bracket. **See Photo 5.**
6. Install the driver rear motor to the body of the vehicle (reference the driver front installation steps).

NOTE: Do not tighten at this time, snug only using a 8mm socket.

Photo 6

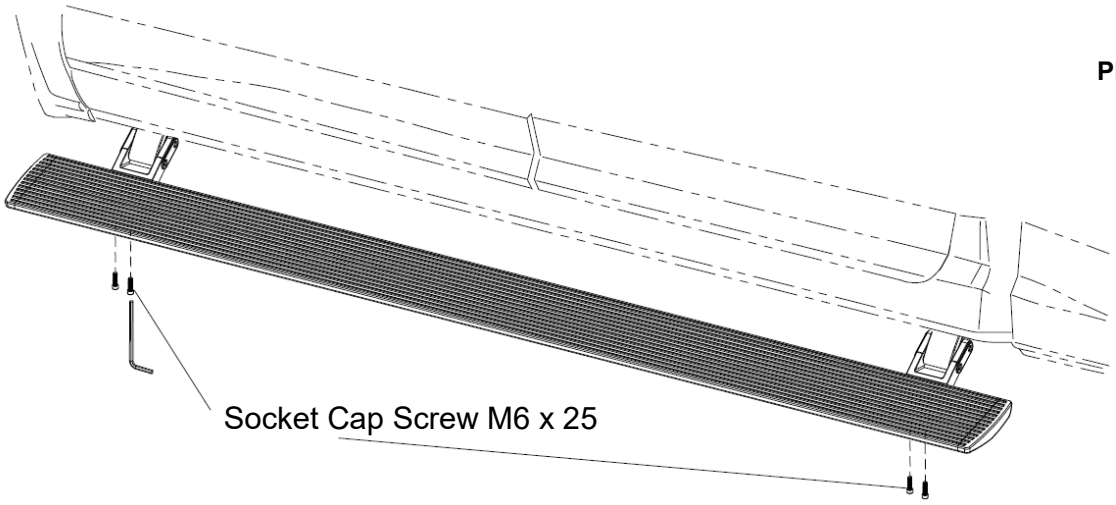

7. Install the step board onto the driver front and rear motor brackets. Secure the board using (2) M6 x 25 Socket Cap Screw bolts into each motor bracket.

NOTE: Center the step to the cab of the vehicle. Do not tighten at this time, snug only using a 5mm Allen. **See Photo 6.**

8. At this time install the Passengers Side step motors and step board following the steps from 1-6.

trailfortress.com/rough-country-power-running-boards-psr9015

Installation of the controller

Photo 7

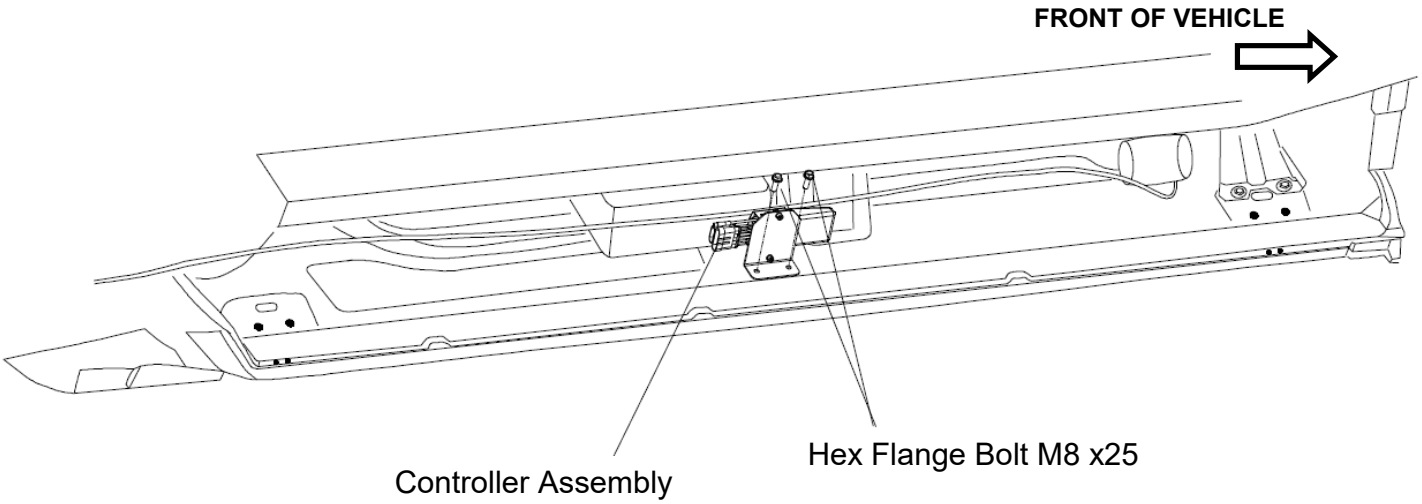

9. Install the nut plate into the slotted hole in the center driver side inner rocker panel using (1) of the supplied rivets. (Refer to steps 1 and 2 for using the template to drill the rivet hole.) Secure the controller assembly to the nut plate using (2) M8 x25 hex flange bolts. Tighten the bracket using a 10mm socket. **See Photo 7.**

Photo 8

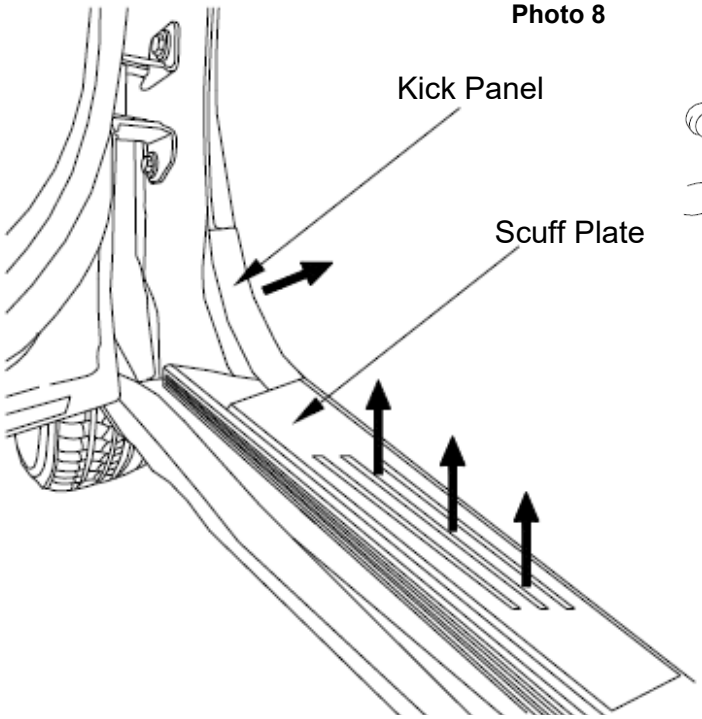

Photo 9

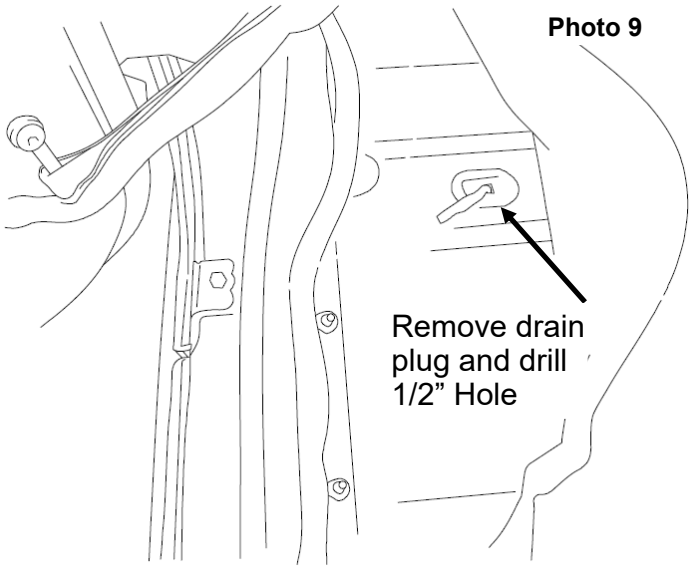

Driver side shown.

10. Remove the kick panel and the scuff plate on the Driver and Passenger side of the vehicle. **See Photo 8.**
11. Lift the carpet to expose and remove the drain plug on the driver side. In the center of the drain plug drill a hole using a 1/2” drill, re-install into the floor of the cab. **See Photo 9.**

trailfortress.com/rough-country-power-running-boards-psr9015

Wiring Harness Installation

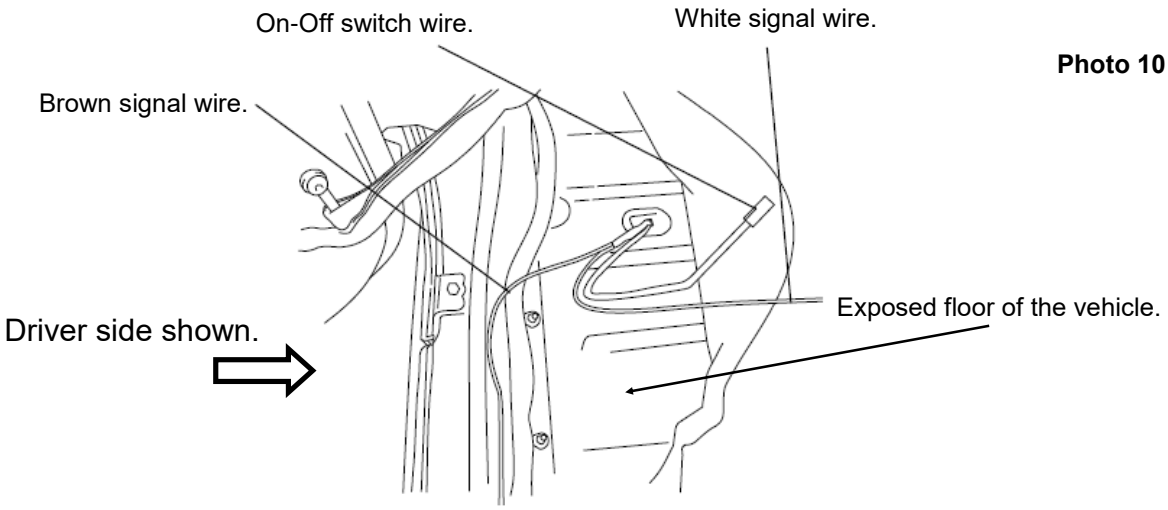

Photo 10

12. Install the supplied wiring harness's Brown, White and On-Off switch wire through the hole drilled in the drain plug under the floor of the vehicle to the inside of the cab. **See Photo 10.**

NOTE: Apply waterproof tape to the wiring harness and the drain plug once the wiring harness has been fully installed.

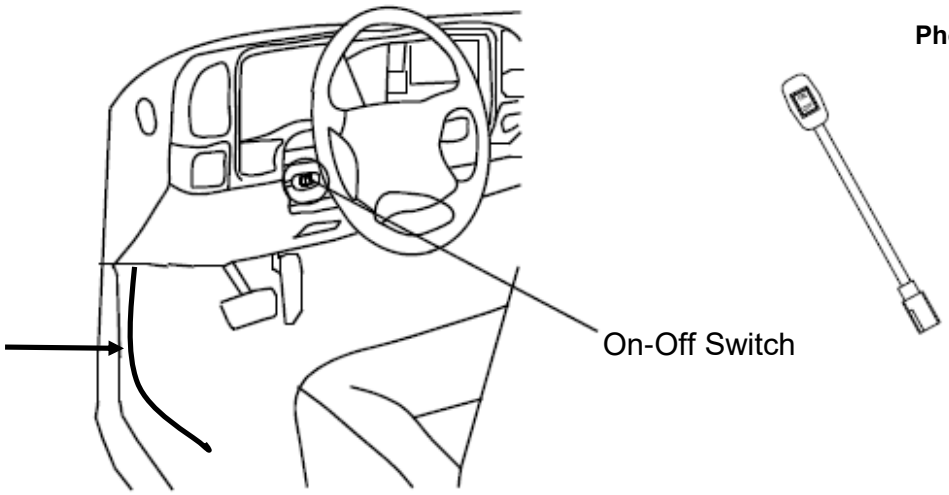

Photo 11

13. Mount the On-Off switch. Clean the area of installation and remove the covering on the double sided tape and applying it to the dash. Switch shown on the upper dash. **See Photo 11.**
14. Connect the On-Off switch to the wiring harness installed in the floor of the cab. Leave switch in the On position, this will keep the motors in the extended position as installed to the vehicle when power is connected. Secure the wiring harness behind the dash to the drain plug under the carpet.

NOTE: Normal function of the On-Off switch once power has been connected to the positive and negative fused links on the battery. (On) the steps will extend for use and entering the vehicle. Steps will retract when both doors per side are closed connecting the magnet to the module. (Off) the steps will retract to the body of the vehicle even when the doors are open and the magnet is away from the module.

trailfortress.com/rough-country-power-running-boards-psr9015

FRONT OF VEHICLE

Photo 12A



Front Passenger Door Module (C)

Photo 12B

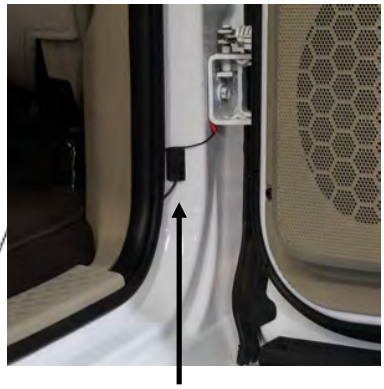

Rear Passenger Door Module (C)

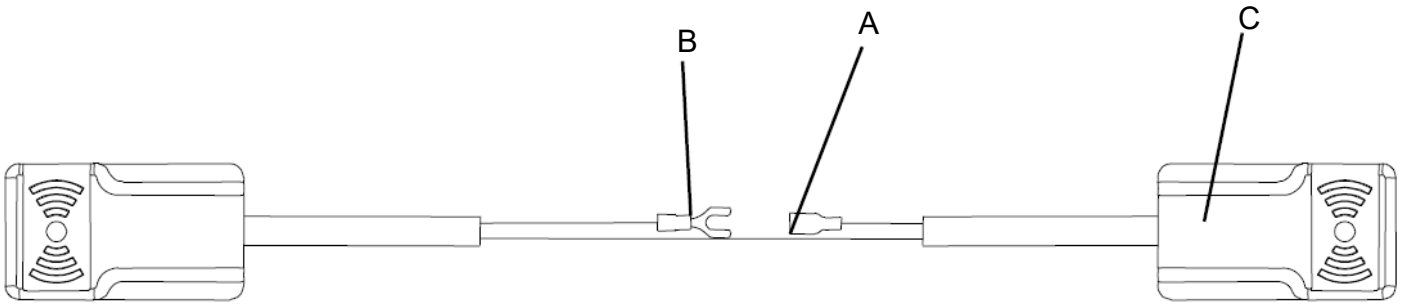

15. Remove the interior trim panel on the passenger side of the vehicle (*If interior trim is equipped with air bag, use caution*). Connect the White signal wire from the wiring harness to terminal (A) on the module. Connect module wire (B) to the vehicle ground. Remove the double sided tape backing and place the front module (C) in a secure location to the inside of the door jamb. **See Photo 12 A.** Remove the cover off of the double sided tape and place the place the rear module (C) in a secure location to the inside of the door jamb. **See Photo 12 B.**
16. Follow step 14 and install the driver side module using the brown wire from the supplied wiring harness. *Photos 12A and 12B are shown from the passenger side of the vehicle*.

NOTE: The magnets will be installed in a later step after the power has been connected.

trailfortress.com/rough-country-power-running-boards-psr9015

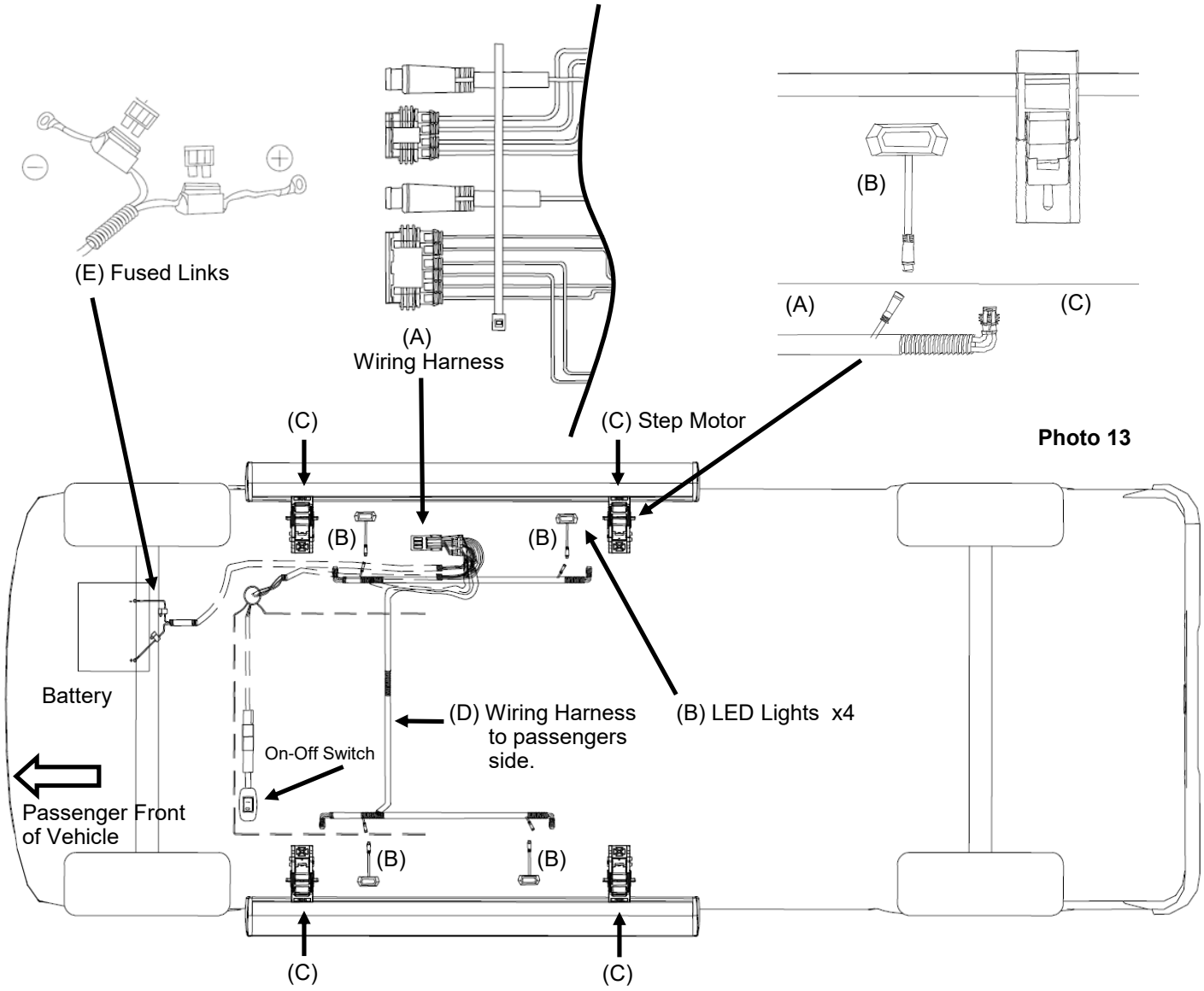

17. (A) Connect the 4 plugs of the wiring harness to the controller assembly mounted to the body of the vehicle on the driver side. **See Photo 13.**
18. (B) Mount the (4) LED Lights. Clean the surface of the pinch weld under the center of each door on the driver and passenger side of the vehicle. Remove the double sided tape backing and apply to the pinch weld.
19. (A) Route the wiring harness along the frame of the driver side.
20. (C) Connect the step motor labeled to the corresponding wiring harness (Driver Side) Front Left Motor and Rear Left Motor.
21. (B) Connect the LED light plugs on the driver side.
22. (D) Route the wiring harness across the frame to the passenger side of the vehicle.
23. (C) Connect the step motor labeled to the corresponding wiring harness (Passengers Side) Front Right Motor and Rear Right Motor.
24. (B) Connect the LED light plugs on the passenger side.
25. (E) Route the fused link harness along the driver side frame up to the battery box, secure the wiring harness with the supplied wire ties away from heat or moving parts. Connect the fused link's to the Positive and Negative side of the battery.

trailfortress.com/rough-country-power-running-boards-psr9015

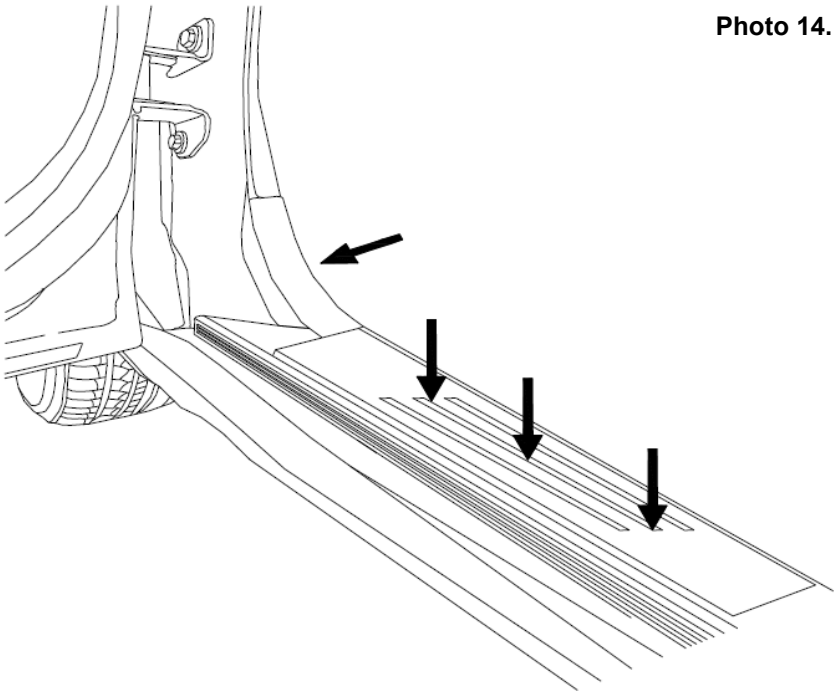

Photo 14.

26. Adjust the carpet into place and re-install the B-pillar trim, kick panel and the scuff plate on the driver and passenger side of the vehicle. **See Photo 14.**

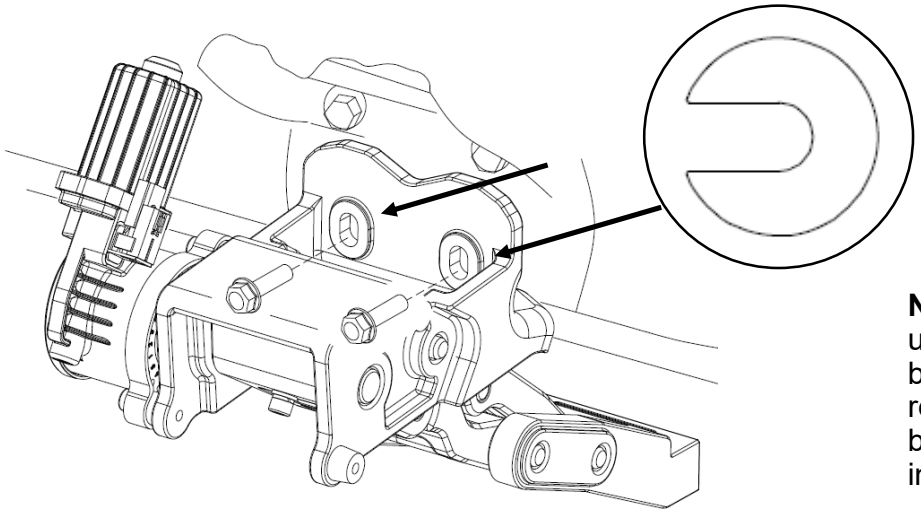

Photo 15.

NOTE: The Shims will be used if the steps are in a bind or the mounting surface requires a small adjustment before tightening the mounting brackets.

27. Using the (On-Off) switch cycle the steps (2-3 Times) leave them in the down position. The switch will be in the (On) position.
28. If the boards need adjusting or are in a bind, the supplied shims can be placed in-between the motor bracket and the body of the vehicle. Steps should work in a smooth motion with no binding. **See Photo 15.**
29. At this time, tighten the rear M8 x30 motor bracket bolt's using a 10mm socket to 45ft/lbs. and the front pinch weld mount M6 x20 bolts using a 8mm socket to 23ft/lbs.
30. Tighten the step to the motor bracket using a 5mm Allen to 14ft/lbs.

trailfortress.com/rough-country-power-running-boards-psr9015

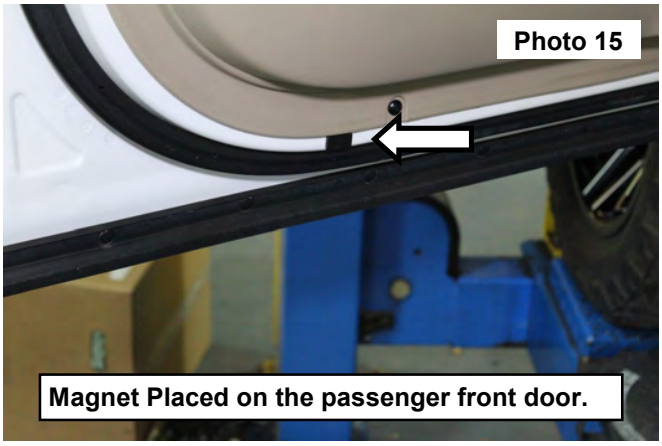

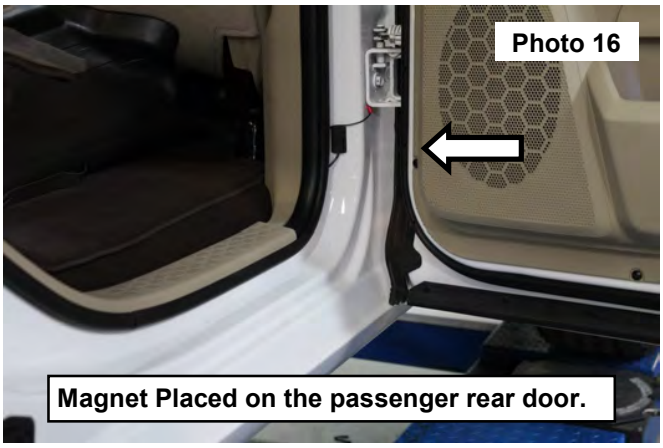

31 Place the magnet on the vehicle door aligned with the module. (Shown on the passenger side) for aluminum door vehicles this can be done with painter's tape to test and ensure it will work correctly. **See Photos 15 and 16.**

32. Ensure the On-Off switch is in the ON position. Now test the front and rear doors on the right and left side of the vehicle. If each one works correctly, the magnets are in line with the module. Mark the magnets position on each of the 4 doors, remove the covering from the double sided tape and stick the magnet to the door in the marked position.

NOTE: The On-Off switch will remain in the On position for normal use. We recommend the switch be in the Off position in icy or off roading conditions to prevent binding or damage to the step board, motor or motor bracket.

Troubleshooting Guide

Steps not working.

- On/Off Switch in On position
- Check for proper Power and Ground connections to battery
- Check Fuses in the Positive and Negative wires to the battery
- Check Ground connection on Pass and Driver side at B-Pillar
- Check all plugs and connections to ensure they are seated properly and making a good connection

Steps work with On/Off Switch but not with doors opening and closing.

- Check Module to Magnet alignment on doors
- Use a magnet to position over module

Steps drop when door is closed and retract when door is opened.

- Motors will operate in revers polarity. Check the fused links on the battery for Positive and Negative connection

trailfortress.com/rough-country-power-running-boards-psr9015

Torque Specs:

Size	Grade 5	Grade 8	Size	Class 8.8	Class 10.9
5/16”	15 ft/lbs	20ft/lbs	6MM	5ft/lbs	9ft/lbs
3/8”	30 ft/lbs	35ft/lbs	8MM	18ft/lbs	23ft/lbs
7/16”	45 ft/lbs	60ft/lbs	10MM	32ft/lbs	45ft/lbs
1/2”	65 ft/lbs	90ft/lbs	12MM	55ft/lbs	75ft/lbs
9/16”	95 ft/lbs	130ft/lbs	14MM	85ft/lbs	120ft/lbs
5/8”	135ft/lbs	175ft/lbs	16MM	130ft/lbs	165ft/lbs
3/4”	185ft/lbs	280ft/lbs	18MM	170ft/lbs	240ft/lbs

By purchasing any item sold by Rough Country, LLC, the buyer expressly warrants that he/she is in compliance with all applicable, State, and Local laws and regulations regarding the purchase, ownership, and use of the item. It shall be the buyers responsibility to comply with all Federal, State and Local laws governing the sales of any items listed, illustrated or sold. The buyer expressly agrees to indemnify and hold harmless Rough Country, LLC for all claims resulting directly or indirectly from the purchase, ownership, or use of the items.

trailfortress.com/rough-country-power-running-boards-psr9015