TRAIL FORTRESS

BUILT FOR THE TRAIL. CHECKED FOR YOUR TRUCK.

Rough Country PSR71520 Installation Instructions

6-Inch Power Running Boards for F-150 Crew Cab

Part number: PSR71520

trailfortress.com/rough-country-power-running-boards-psr71520

Scan for fitment, price and install help

FORD 2015-23 F150/SUPER DUTY

Thank you for choosing Rough Country for all your vehicle needs.

Please read instructions before beginning installation. Check the kit hardware against the kit contents shown below. Be sure you have all needed parts and know where they go.
If questions exist, please call us @1-800-222-7023. We will be happy to answer any questions concerning this product.
Check all fasteners for proper torque. Check to ensure for adequate clearance between all components.
Periodically check all hardware for tightness.

KIT CONTENTS (2D):
Board Assembly x2
Front Motor Left x1
Front Motor Right x1
Rear Motor Left x1
Rear Motor Right x1
Controller Assembly x1
LED Lights x4
Power Board Switch x1
Wiring Harness

Wired Magnetic Sensors
Module x2
Magnet x4

TOOLS NEEDED:
5mm Allen
13mm Wrench
Screw Driver
Pry Tool
Weatherproof Tape

HARDWARE INCLUDED:
M8 Hex Nut x14
8mm Flat Washer x14
Spring Washer x14
M6x25mm Socket Cap Screw x8
Wire Tie x25
Fuse x2

Product Packing List

Board Assembly x2

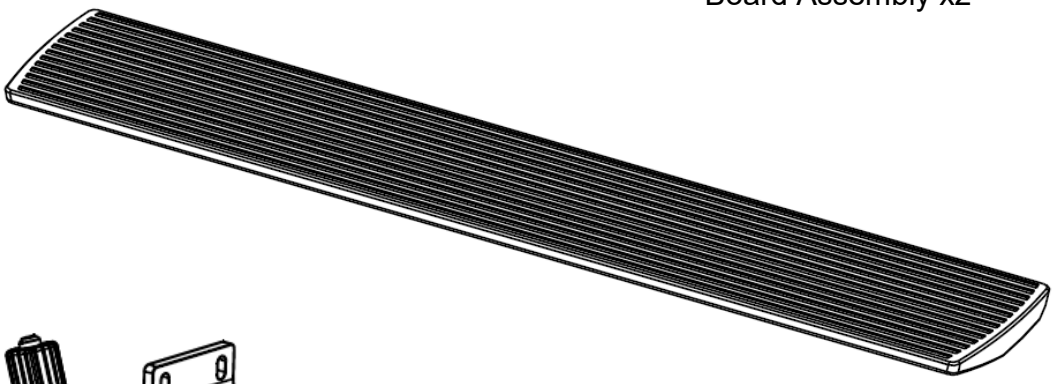

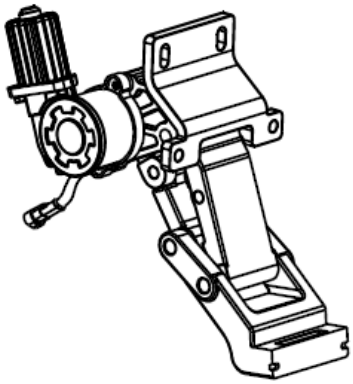

Front Left Motor x1
Driver Side

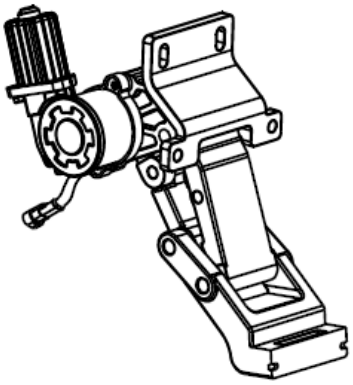

Rear Left Motor x1
Driver Side

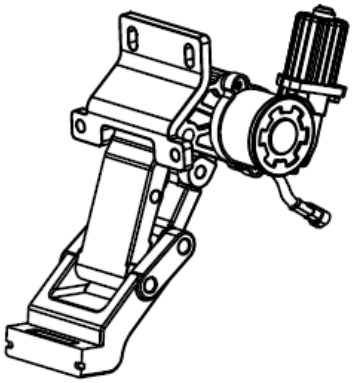

Rear Right Motor x1
Passenger Side

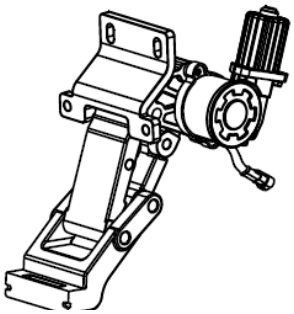

Front Right Motor x1
Passenger Side

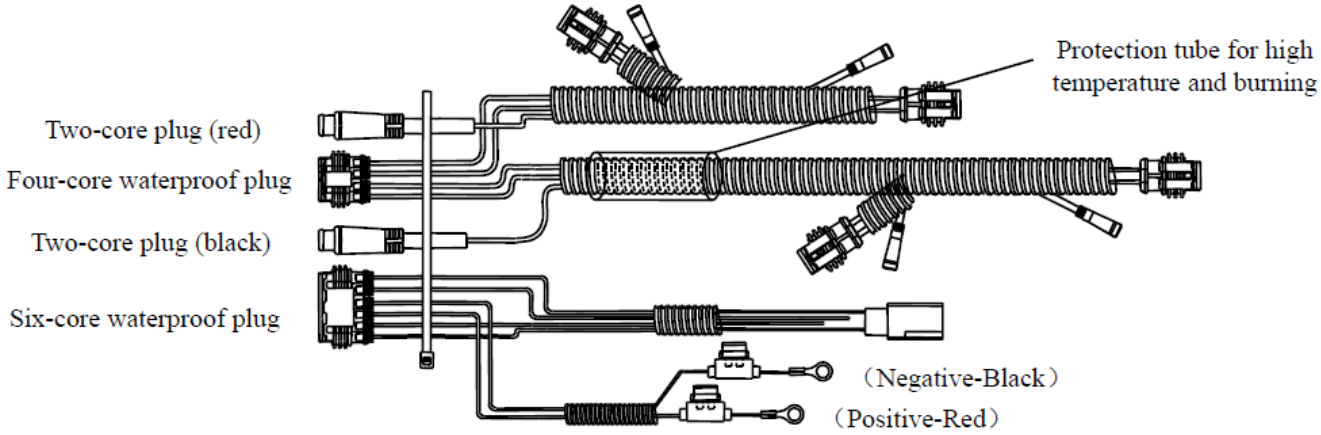

Wiring Harness x1

trailfortress.com/rough-country-power-running-boards-psr71520

Controller Assembly x1

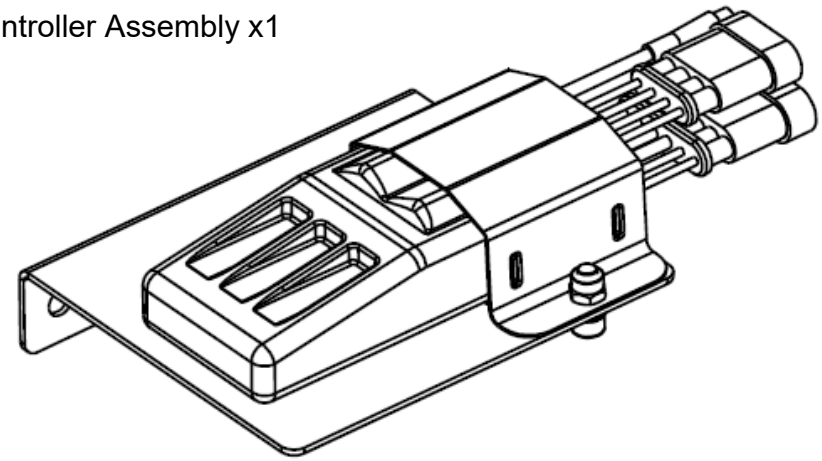

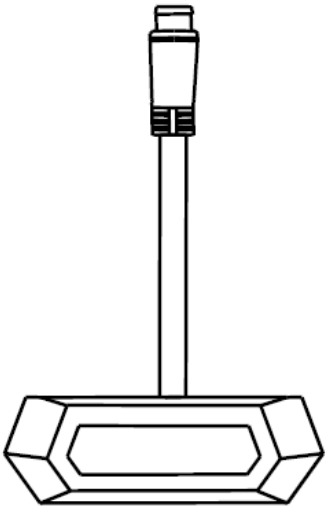

LED Lights x4



M6x25mm Socket Cap Screw x8



Wire Tie x25

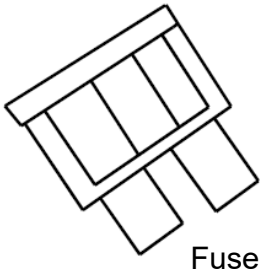

Fuse x2

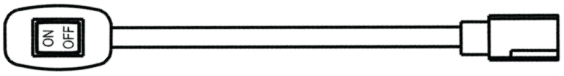

Power Board Switch



8mm Spring Washer x14



Body Mounted Module x2

Door Mounted Magnet x4

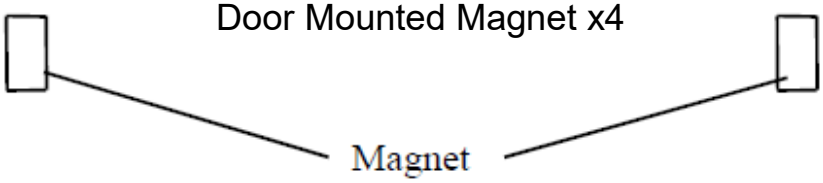

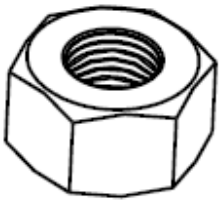

M8 Hex Nut x14

trailfortress.com/rough-country-power-running-boards-psr71520

1. Locate the three rear studs protruding from the vehicle on the driver side. **See Photo 1.**
2. Install the rear driver side motor with three (3) M8 hex nuts, spring washers, and flat washers. Loosely tighten with a 13mm wrench. **See Photo 2.**

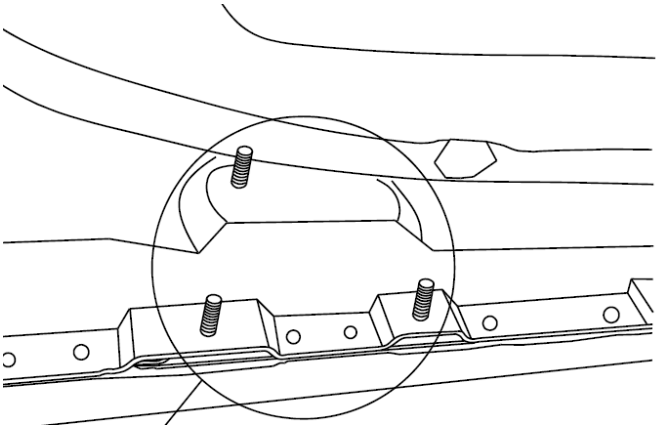

Photo 1

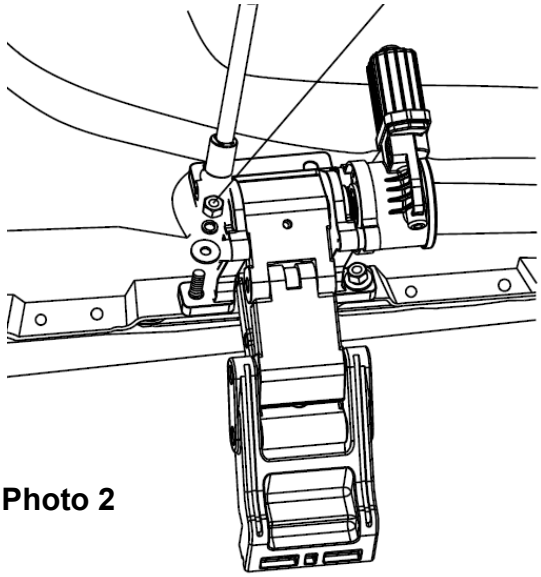

Photo 2

3. Use four (4) of the supplied M6x25mm socket cap screws to attach the board assembly to the driver side motors. Tighten with a 5mm Allen wrench. **See Photo 3.**
4. Repeat Steps 1-3 for passenger side of vehicle.

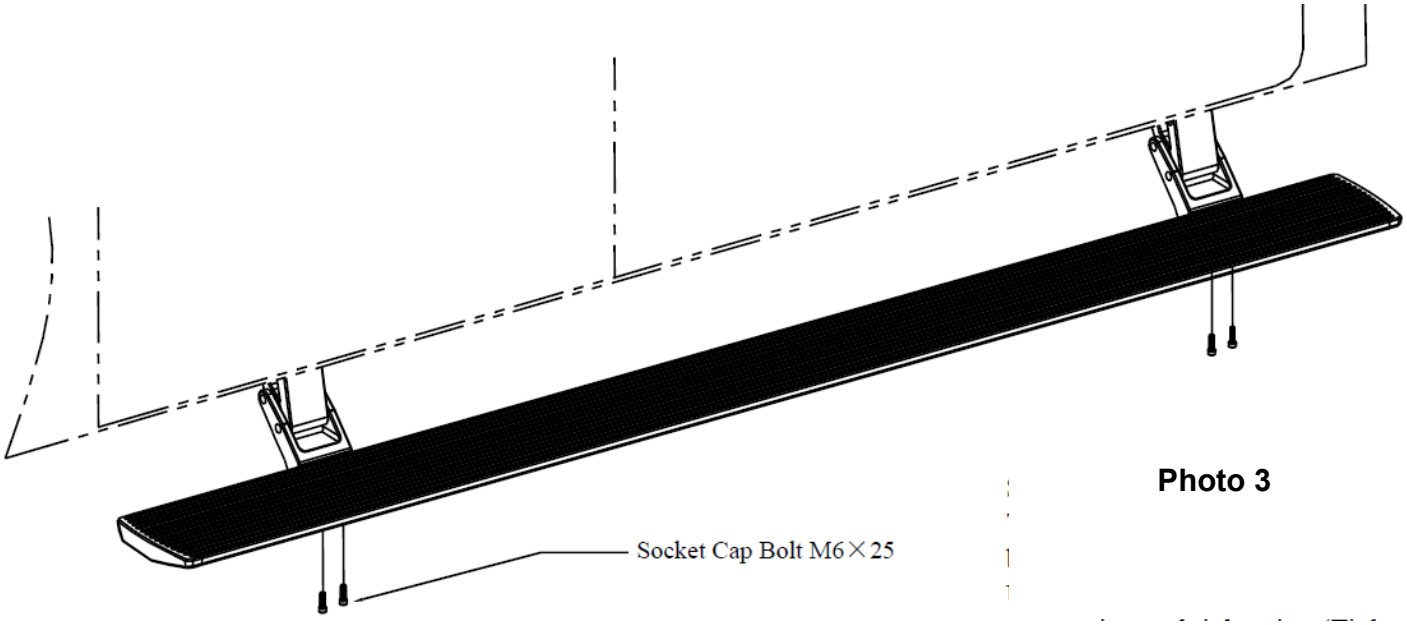

Photo 3

trailfortress.com/rough-country-power-running-boards-psr71520

5. Install the controller assembly on the passenger side of the vehicle with an M8 hex nut, spring washer and flat washer. Tighten with a 13mm wrench. **See Photo 4. NOTE:** Photo shown without motors for ease of visualization.

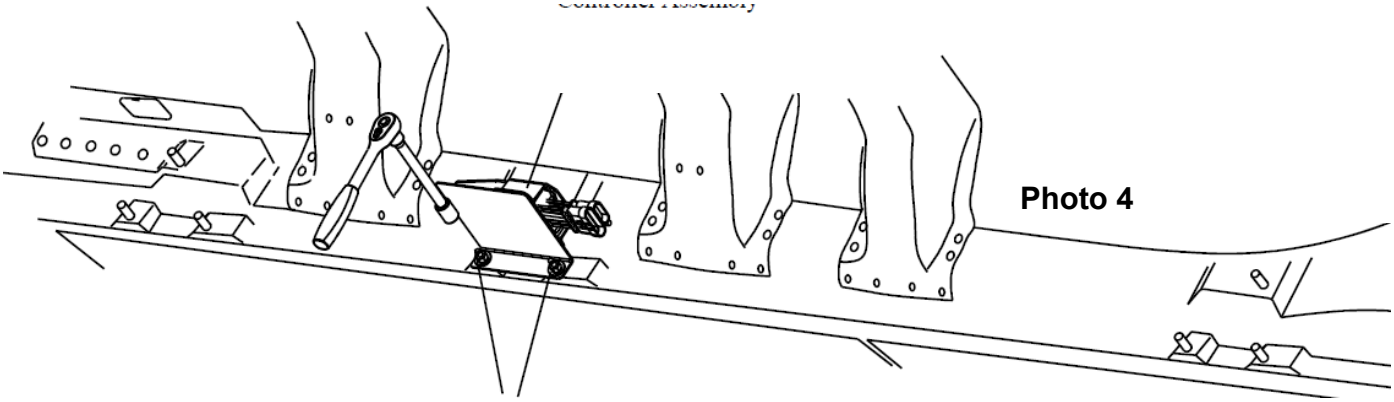

Photo 4

6. Remove the kick panel and the scuff plate on the passenger side of the vehicle.
7. Install the supplied wiring harness' Brown, White, and On/Off Switch wire through the rubber grommet in the floor of the vehicle. **See Photo 5.**
8. **NOTE:** Apply waterproof tape to the wiring harness and the drain plug once the wiring harness has been fully installed.

Photo 5

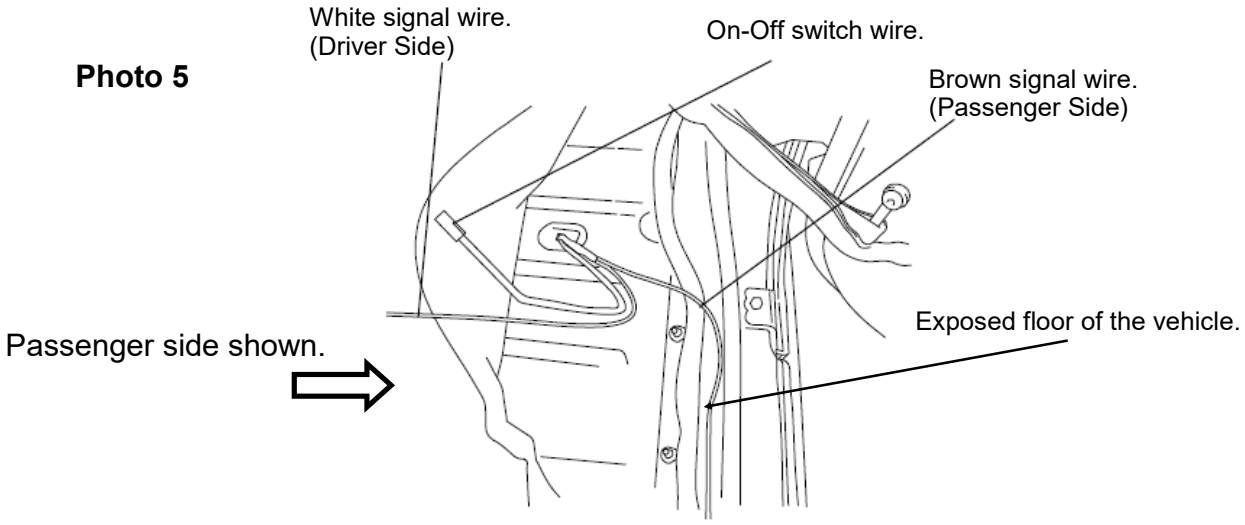

9. Mount the On-Off switch. Clean the area of installation and remove the covering on the double sided tape and apply it to the dash. Switch shown on the upper dash. See Photo 6.
10. Connect the On-Off switch to the wiring harness installed in the floor of the cab. Leave switch in the On position, this will keep the motors in the extended position as installed to the vehicle when power is connected. Secure the On-Off switch wiring harness behind the dash to the drain plug under the carpet.

Photo 6

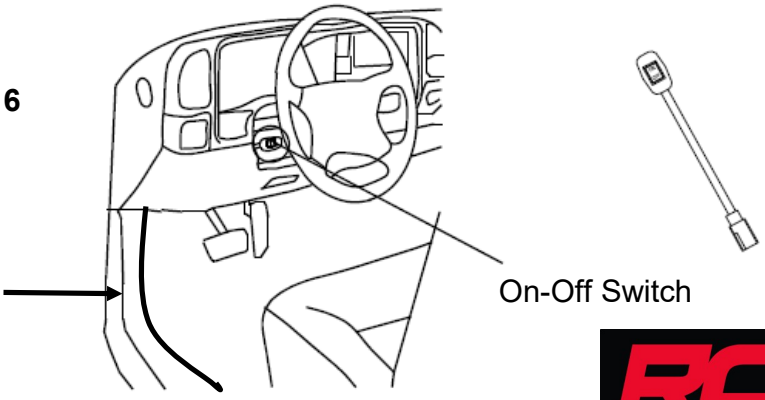

trailfortress.com/rough-country-power-running-boards-psr71520

NOTE: Normal function of the On-Off switch once power has been connected to the positive and negative fused links on the battery. (On) the steps will extend for use and entering the vehicle. Steps will retract when both doors per side are closed connecting the magnet to the module. (Off) the steps will retract to the body of the vehicle even when the doors are open and the magnet is away from the module.

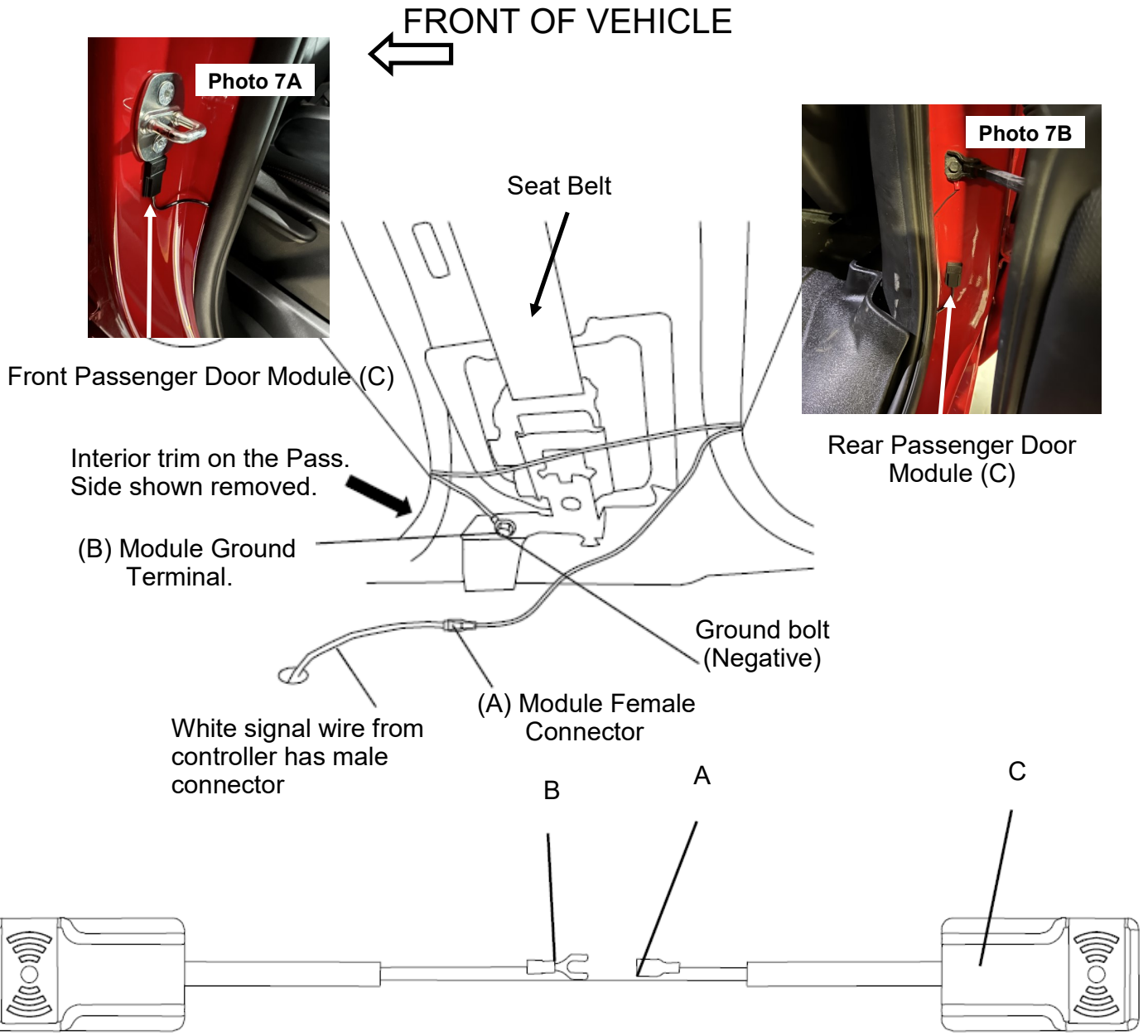

11. Remove the interior trim panel on the passenger side of the vehicle (*If interior trim is equipped with air bag, use caution*). Connect the White signal wire from the wiring harness to terminal (A) on the module. Connect module wire (B) to the vehicle ground. Remove the double sided tape backing and place the front module (C) in a secure location to the inside of the door jamb. **See Photo 7A.** Remove the cover off of the double sided tape and place the place the rear module (C) in a secure location to the inside of the door jamb. **See Photo 7B.**
12. Follow step 14 and install the driver side module using the brown wire from the supplied wiring harness. *Photos 7A and 7B are shown from the passenger side of the vehicle*.

NOTE: The magnets will be installed in a later step after the power has been connected.

trailfortress.com/rough-country-power-running-boards-psr71520

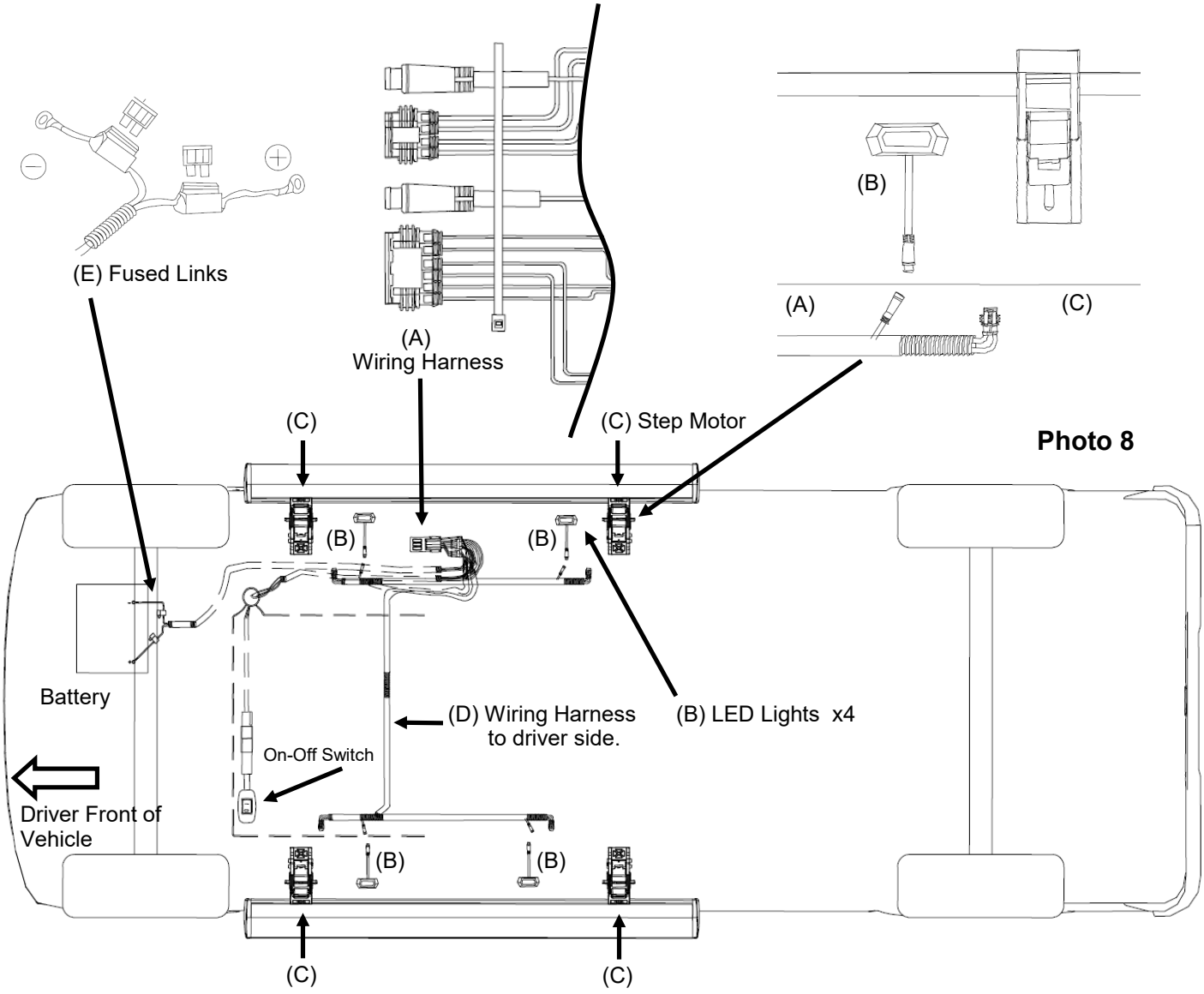

13. (A) Connect the 4 plugs of the wiring harness to the controller assembly mounted to the body of the vehicle on the driver side. **See Photo 8.**
14. (B) Mount the (4) LED Lights. Clean the surface of the pinch weld under the center of each door on the driver and passenger side of the vehicle. Remove the double sided tape backing and apply to the pinch weld.
15. (A) Route the wiring harness along the frame of the driver side.
16. (C) Connect the step motor labeled to the corresponding wiring harness (Driver Side) Front Left Motor and Rear Left Motor.
17. (B) Connect the LED light plugs on the driver side.
18. (D) Route the wiring harness across the frame to the passenger side of the vehicle.
19. (C) Connect the step motor labeled to the corresponding wiring harness (Passengers Side) Front Right Motor and Rear Right Motor.
20. (B) Connect the LED light plugs on the passenger side.
21. (E) Route the fused link harness along the driver side frame up to the battery box, secure the wiring harness with the supplied wire ties away from heat or moving parts. Connect the fused link's to the Positive and Negative side of the battery.

trailfortress.com/rough-country-power-running-boards-psr71520

Photo 9

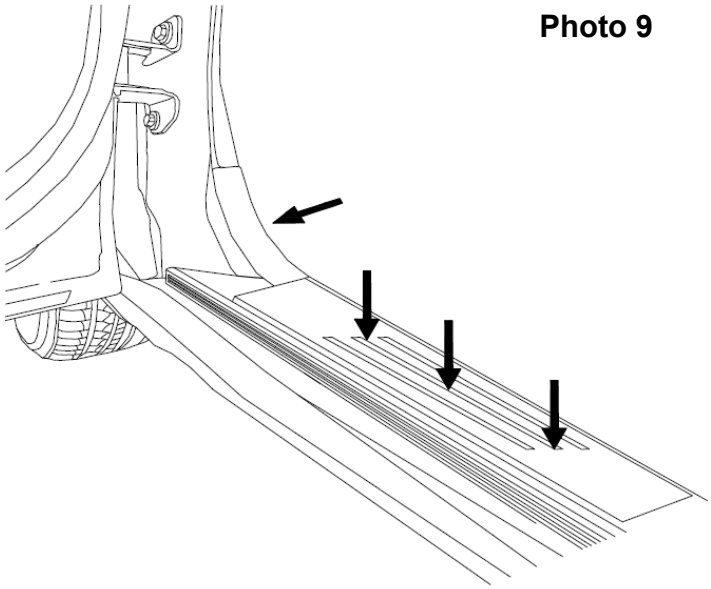

22. Adjust the carpet into place and re-install the B-pillar trim, kick panel and the scuff plate on the driver and passenger side of the vehicle. **See Photo 9.**
23. Using the (On-Off) switch cycle the steps (2-3 Times) leave them in the down position. The switch will be in the (On) position.
24. At this time, tighten the rear M8 x30 motor bracket bolt's using a 10mm socket to 45ft/lbs. and the front pinch weld mount M6 x20 bolts using a 8mm socket to 23ft/lbs.
25. Tighten the step to the motor bracket using a 5mm Allen to 14ft/lbs.
26. Place the magnet on the vehicle door aligned with the module. (Shown on the passenger side) for aluminum door vehicles this can be done with painter's tape to test and ensure it will work correctly. **See Photos 10 and 111.**
27. Ensure the On-Off switch is in the ON position. Now test the front and rear doors on the right and left side of the vehicle. If each one works correctly, the magnets are in line with the module. Mark the magnets position on each of the 4 doors, remove the covering from the double sided tape and stick the magnet to the door in the marked position.

NOTE: The On-Off switch will remain in the On position for normal use. We recommend the switch be in the Off position in icy or off roading conditions to prevent binding or damage to the step board, motor or motor bracket.

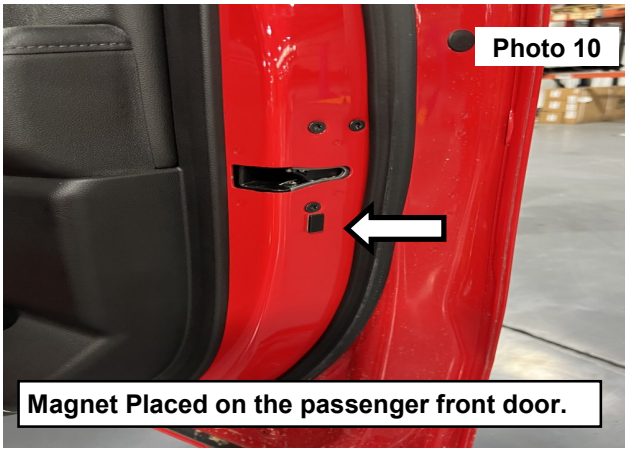

Photo 10

Magnet Placed on the passenger front door.

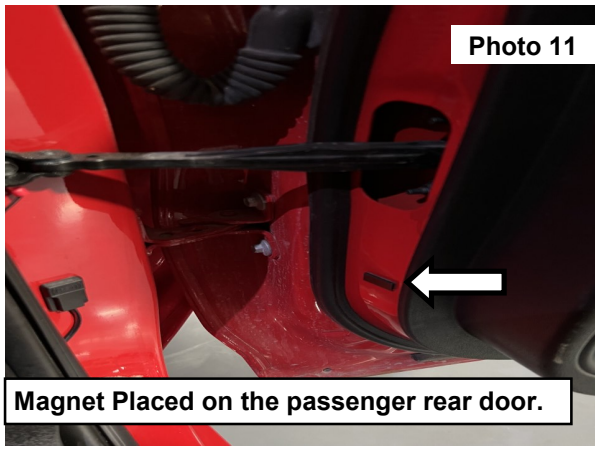

Photo 11

Magnet Placed on the passenger rear door.

trailfortress.com/rough-country-power-running-boards-psr71520

Troubleshooting Guide

Steps not working.

- On/Off Switch in On position
- Check for proper Power and Ground connections to battery
- Check Fuses in the Positive and Negative wires to the battery
- Check Ground connection on Pass and Driver side at B-Pillar
- Check all plugs and connections to ensure they are seated properly and making a good connection

Steps work with On/Off Switch but not with doors opening and closing.

- Check Module to Magnet alignment on doors
- Use a magnet to position over module

Steps drop when door is closed and retract when door is opened.

- Motors will operate in reverse polarity. Check the fused links on the battery for Positive and Negative connection

Torque Specs:

Size	Grade 5	Grade 8	Size	Class 8.8	Class 10.9
5/16”	15 ft/lbs	20ft/lbs	6MM	5ft/lbs	9ft/lbs
3/8”	30 ft/lbs	35ft/lbs	8MM	18ft/lbs	23ft/lbs
7/16”	45 ft/lbs	60ft/lbs	10MM	32ft/lbs	45ft/lbs
1/2”	65 ft/lbs	90ft/lbs	12MM	55ft/lbs	75ft/lbs
9/16”	95 ft/lbs	130ft/lbs	14MM	85ft/lbs	120ft/lbs
5/8”	135ft/lbs	175ft/lbs	16MM	130ft/lbs	165ft/lbs
3/4”	185ft/lbs	280ft/lbs	18MM	170ft/lbs	240ft/lbs

By purchasing any item sold by Rough Country, LLC, the buyer expressly warrants that he/she is in compliance with all applicable, State, and Local laws and regulations regarding the purchase, ownership, and use of the item. It shall be the buyers responsibility to comply with all Federal, State and Local laws governing the sales of any items listed, illustrated or sold. The buyer expressly agrees to indemnify and hold harmless Rough Country, LLC for all claims resulting directly or indirectly from the purchase, ownership, or use of the items.

trailfortress.com/rough-country-power-running-boards-psr71520