TRAIL FORTRESS

BUILT FOR THE TRAIL. CHECKED FOR YOUR TRUCK.

Rough Country PSR70911 Installation Instructions

Power Running Boards for 2022–2025 Toyota Tundra Crew Cab

Part number: PSR70911

trailfortress.com/rough-country-power-running-boards-psr70911

Scan for fitment, price and install help

PRB070911

2022-UP Tundra Crew Max (Six Linkages)

Thank you for choosing Rough Country for all your vehicle needs.

Please read instructions before beginning installation. Check the kit hardware against the kit contents shown below. Be sure you have all needed parts and know where they go.
If questions exist, please call us @1-800-222-7023. We will be happy to answer any questions concerning this product.
Check all fasteners for proper torque. Check to ensure for adequate clearance between all components.
Periodically check all hardware for tightness.

KIT CONTENTS:

Front Motor Left x1
Rear Motor Left x1
Rear Motor Right x1
Front Motor Right x1
Idler Linkage Right x1
Idler Linkage Left x1
Power Board Switch x1
Controller Assembly x1 Control Input Wiring Harness x1 Step Boards x2
LED Lights x4

Wired Magnetic Sensors Module x2
Magnet x4

TOOLS NEEDED:

5mm Allen
13mm Socket
Pry Tool
Wire Stripper Cutter
Vinyl Tape
Screw Driver

HARDWARE INCLUDED:

M8x30 Hex Head Flange Bolt x14
M8x25 Hex Head Flange Bolt x2
M6x25 Socket Cap Screw x12
Shim x8
Wire Ties x25





trailfortress.com/rough-country-power-running-boards-psr70911

Product Packing List

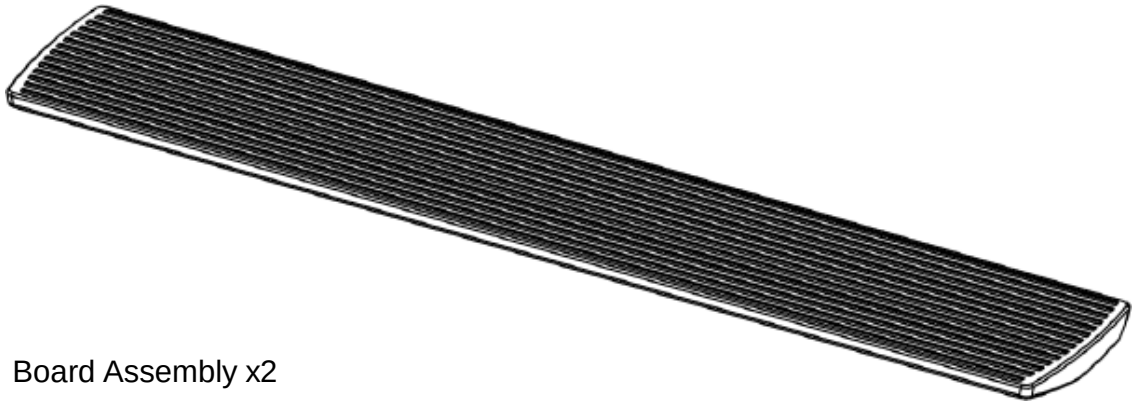

Board Assembly x2

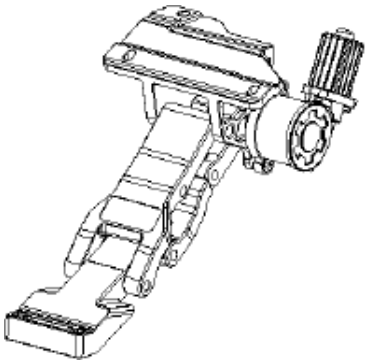

Front Left Motor x1
Driver Side

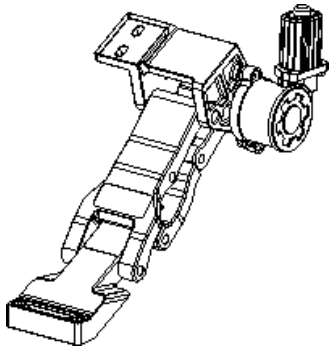

Rear Left Motor x1
Driver Side

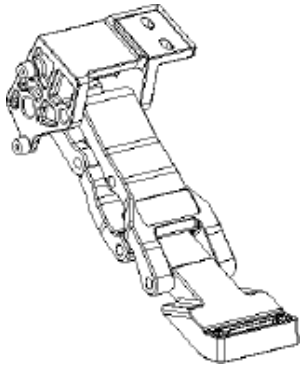

Idler Linkage Left x1
Driver Side

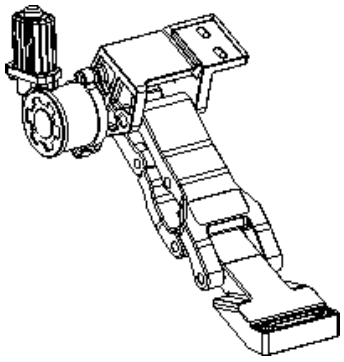

Rear Right Motor x1
Passenger Side

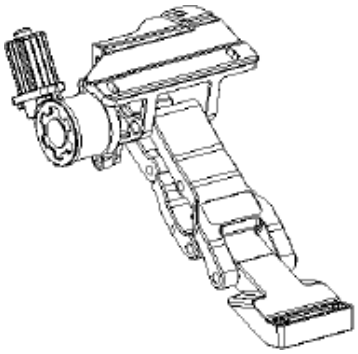

Front Right Motor x1
Passenger Side

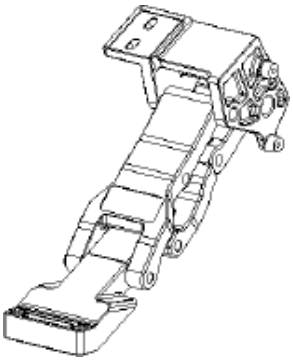

Idler Linkage Right x1
Passenger Side

trailfortress.com/rough-country-power-running-boards-psr70911

Product Packing List

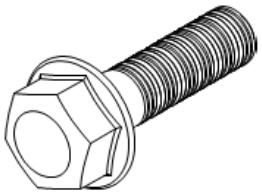

M8x30 Hex Head Flange Bolt x14



M6x25 Socket Cap Screw x12

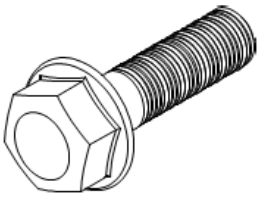

M8x25 Hex Head Flange Bolt x2



Wire Tie x25

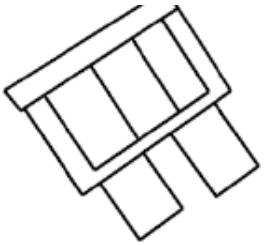

Fuse x2

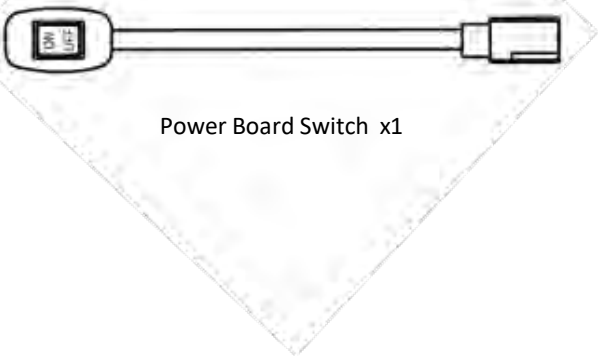

Power Board Switch x1

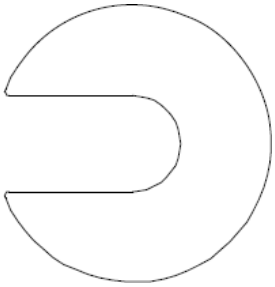

*Shim x8

*Not required for installation. Use as needed for alignment

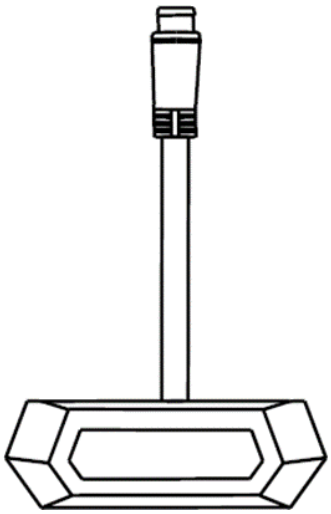

LED Lights x4

trailfortress.com/rough-country-power-running-boards-psr70911

Product Packing List

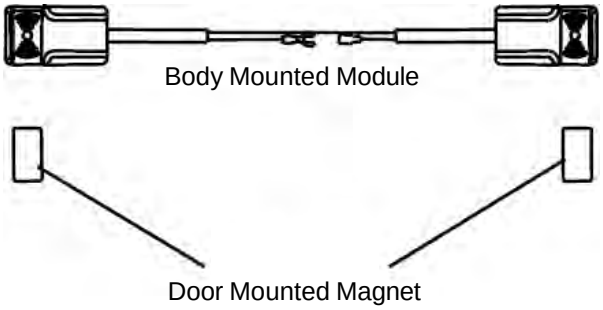

Body Mounted Module x2
Door Mounted Magnet x4

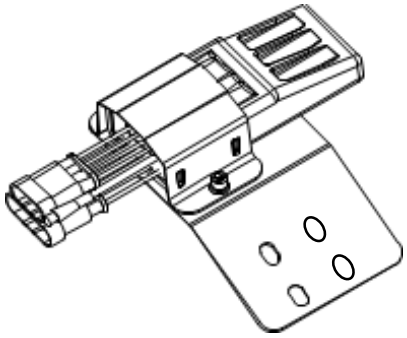

Controller Assembly x1

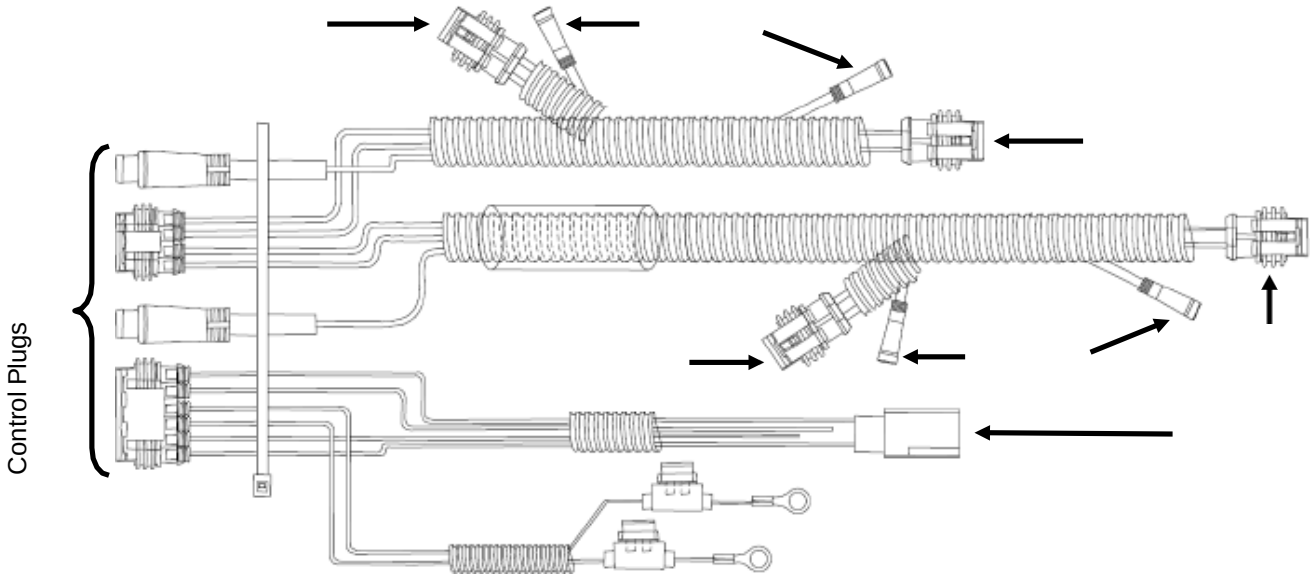

Wiring Harness x1

trailfortress.com/rough-country-power-running-boards-psr70911

Mechanical Installation

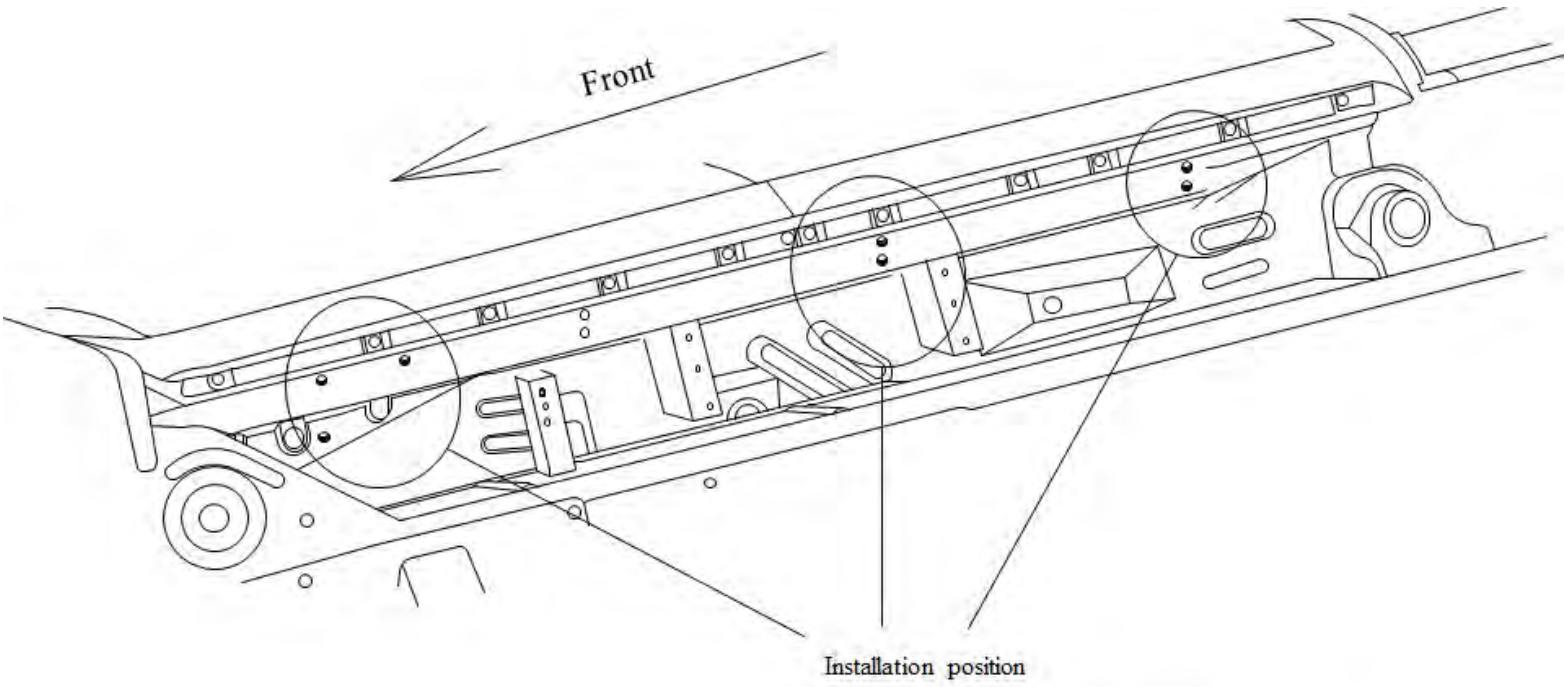

Installation on the driver side.

Installation for the driver side and passenger side are the same. View is of the driver side.

trailfortress.com/rough-country-power-running-boards-psr70911

Motor Linkage Driver Side Installation

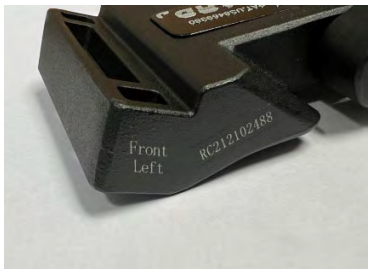

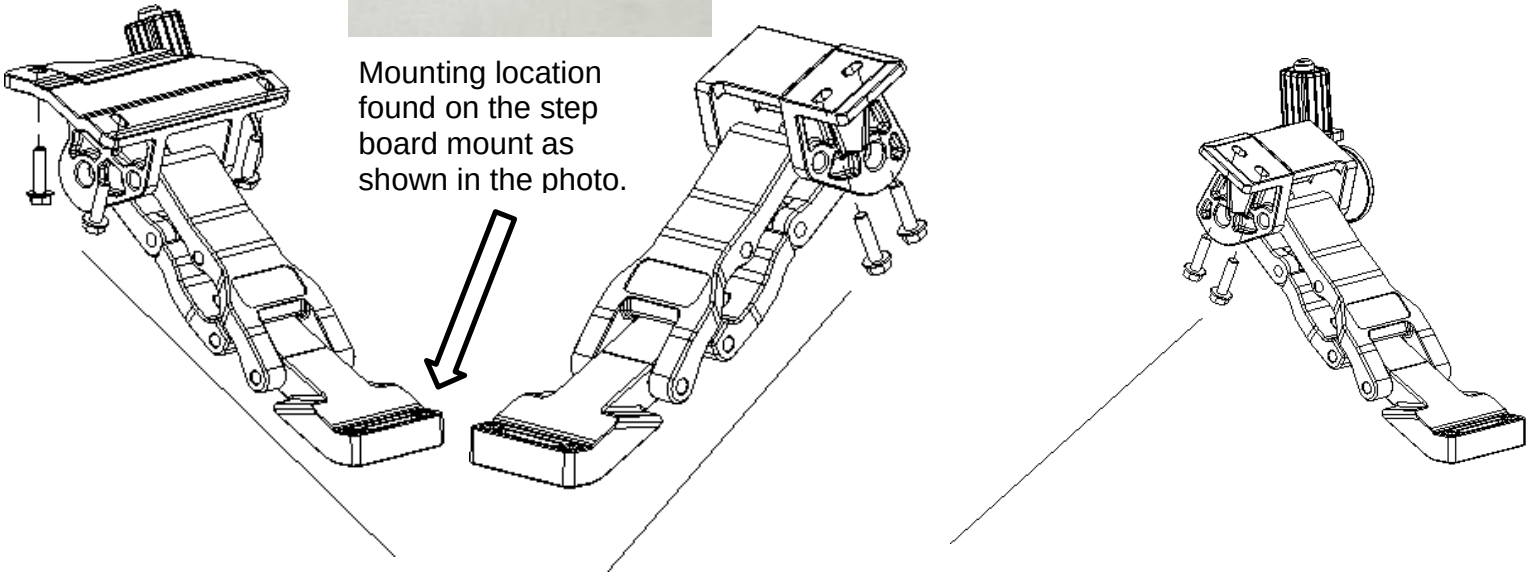

Mounting location found on the step board mount as shown in the photo.

M8x30 Hex Head Flange Bolt

trailfortress.com/rough-country-power-running-boards-psr70911

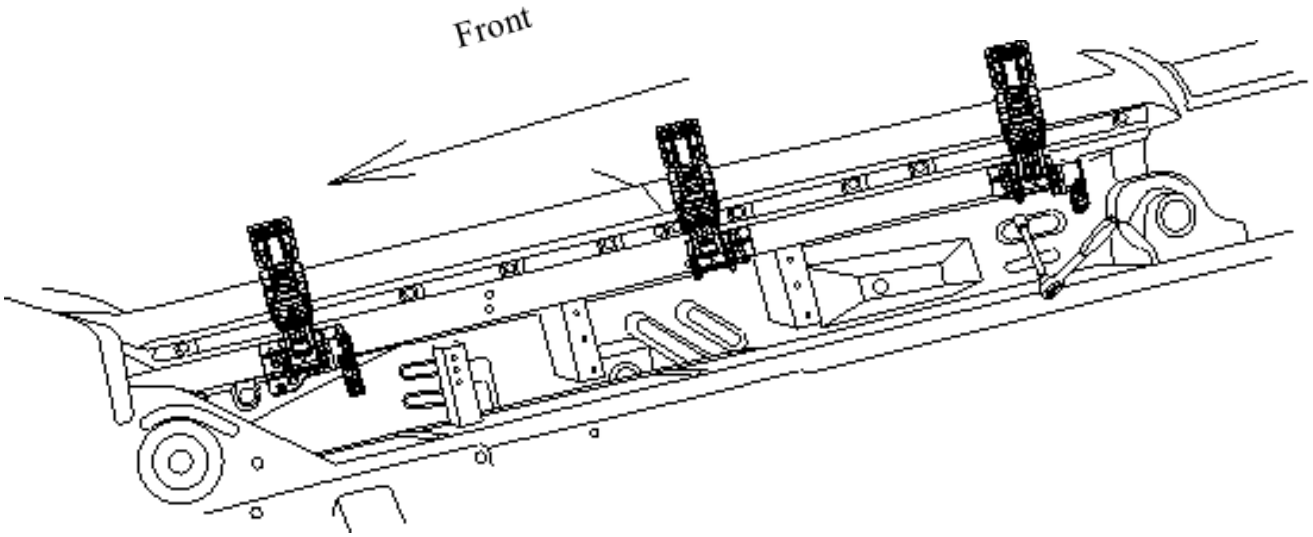

Thread the six (6) M8x30 hex head flange bolts into the corresponding threaded holes in the vehicle body. Do not fully tighten at this time.

trailfortress.com/rough-country-power-running-boards-psr70911

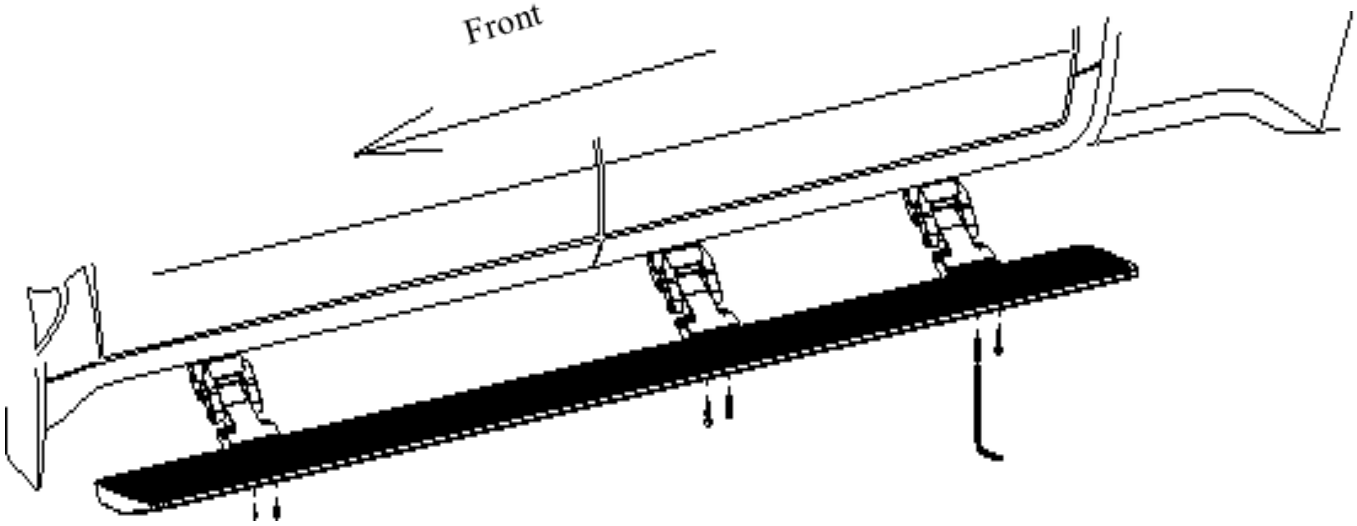

Install the board assembly onto the two motors and one idler arm. Adjust the board to the desired position and install the six (6) M6x25 socket cap screws. Torque to 10 ft-lbs.

Repeat for passenger side.

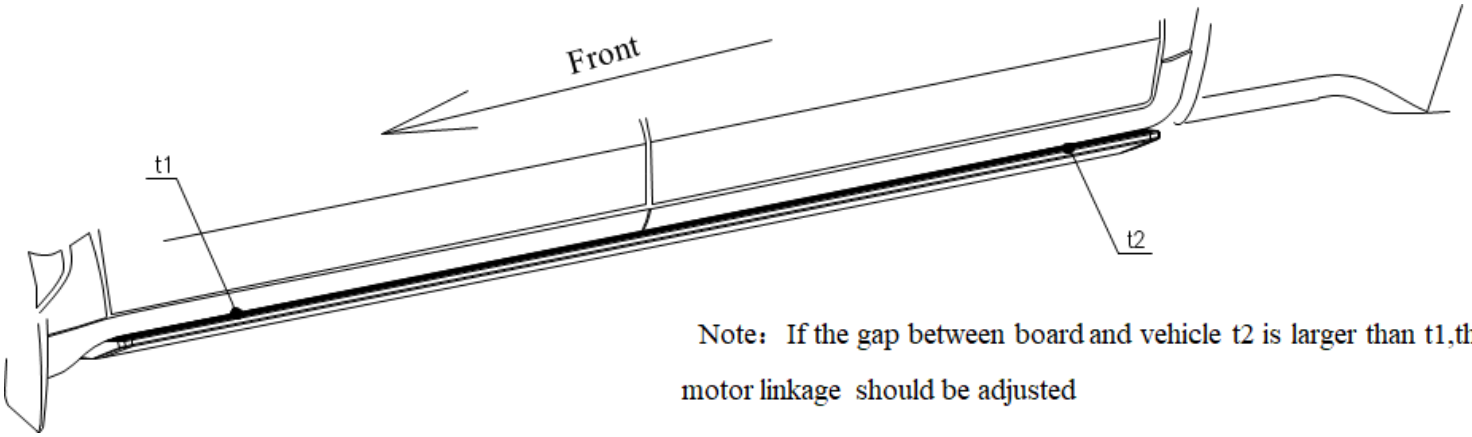

Note：If the gap between board and vehicle t2 is larger than t1,the motor linkage should be adjusted

trailfortress.com/rough-country-power-running-boards-psr70911

t1<t2

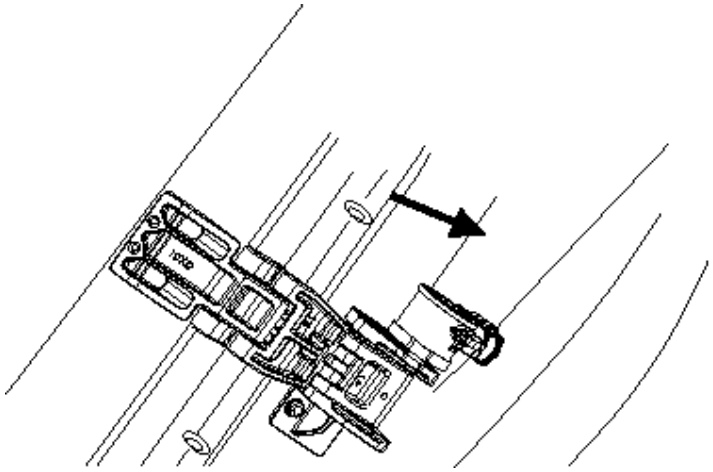

Loosen the two bolts. Move the front motor further inside in the arrow direction and retighten bolts. When the gap is reduced, tighten the six motor linkage bolts. Torque to 10 ft-lbs.

t1>t2

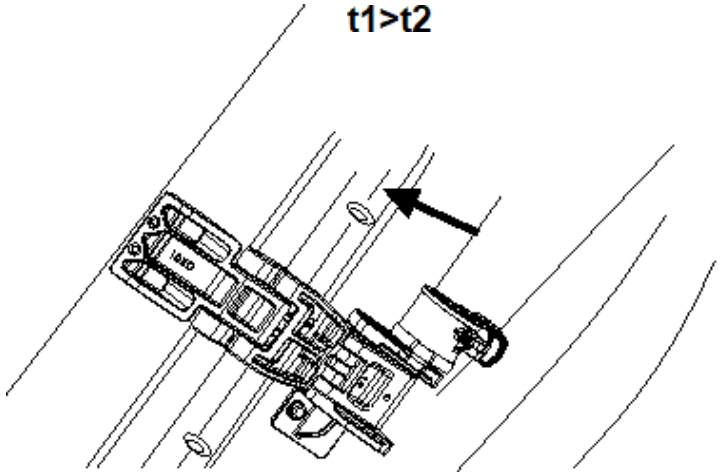

Loosen the two bolts. Move the front motor further out in the arrow direction and retighten bolts. When the gap is reduced, tighten the six motor linkage bolts. Torque to 10 ft-lbs.

trailfortress.com/rough-country-power-running-boards-psr70911

NOTE: This installation sheet assumes the battery is on the passenger side. If your vehicle battery is on the driver side, pay attention to the notes under each step.

Underside view of truck

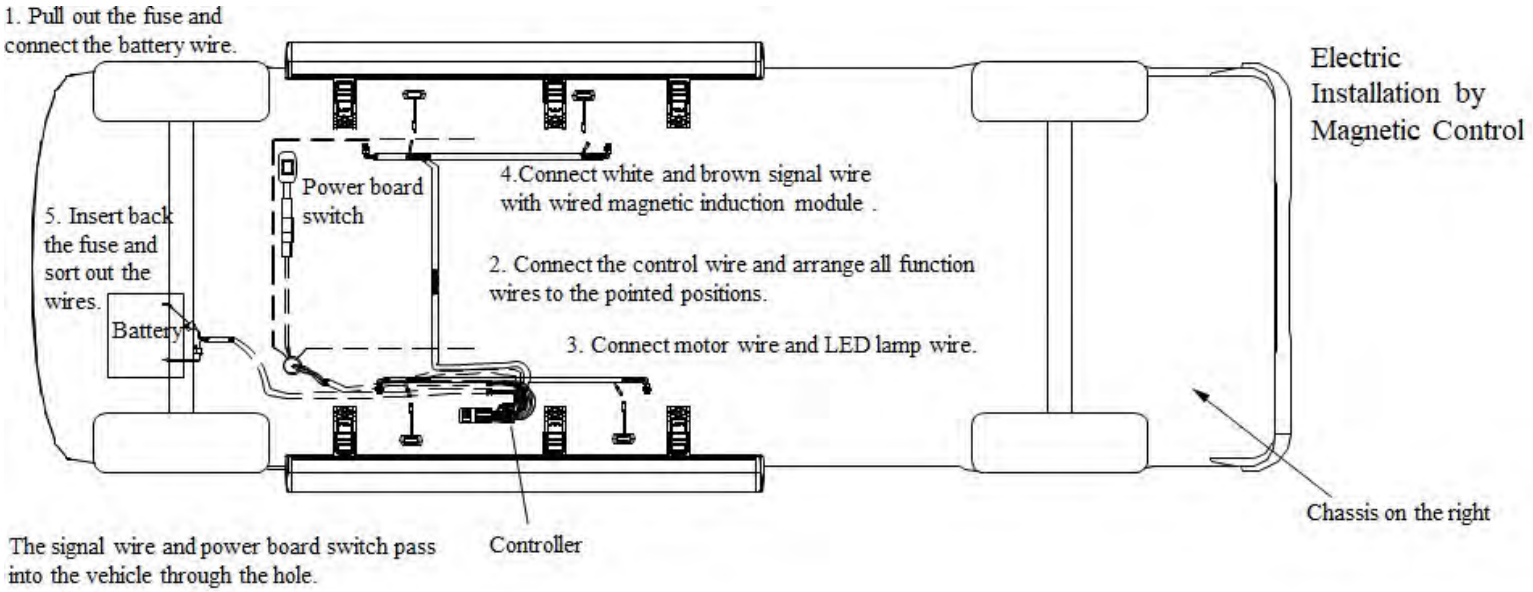

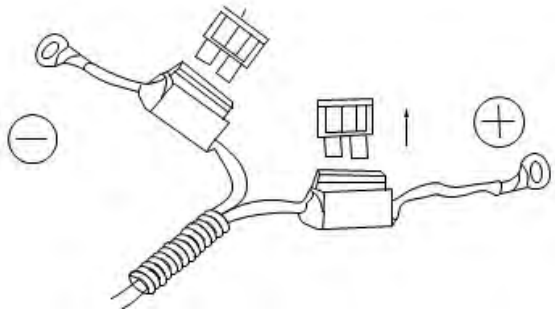

Step 1: Find the fused end links of the wiring harness and remove the two fuses. Connect the positive and negative ends of the wiring harness to the respective vehicle battery terminals. **NOTE:** The battery wire should not be modified.

trailfortress.com/rough-country-power-running-boards-psr70911

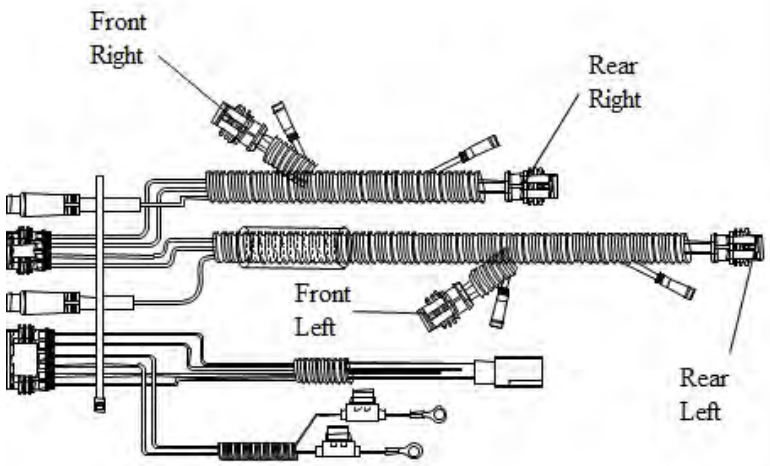

Figure 1

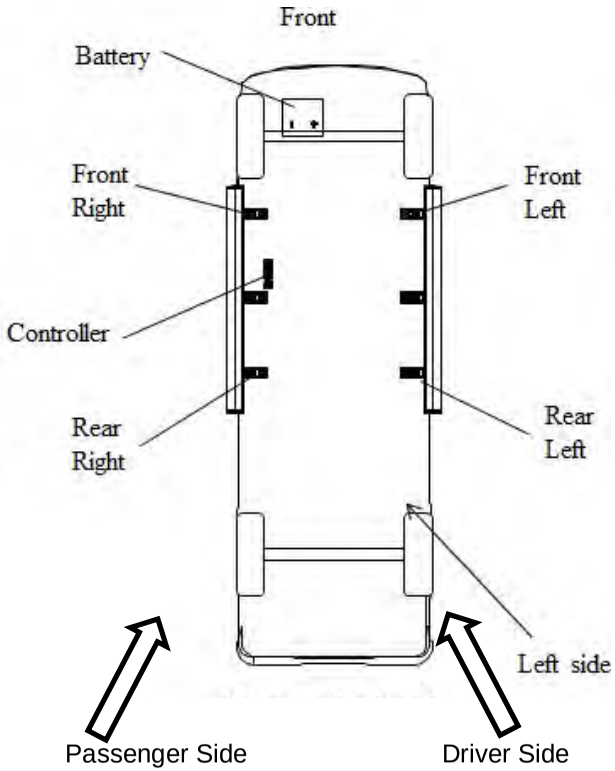

Step 2: Figure 1 is of the wiring harness and Figure 2 is the installation diagram of the vehicle when viewed from below. When installing the wiring harness, make sure the four connectors go to the corresponding motor linkage (ex. Front Right).

trailfortress.com/rough-country-power-running-boards-psr70911

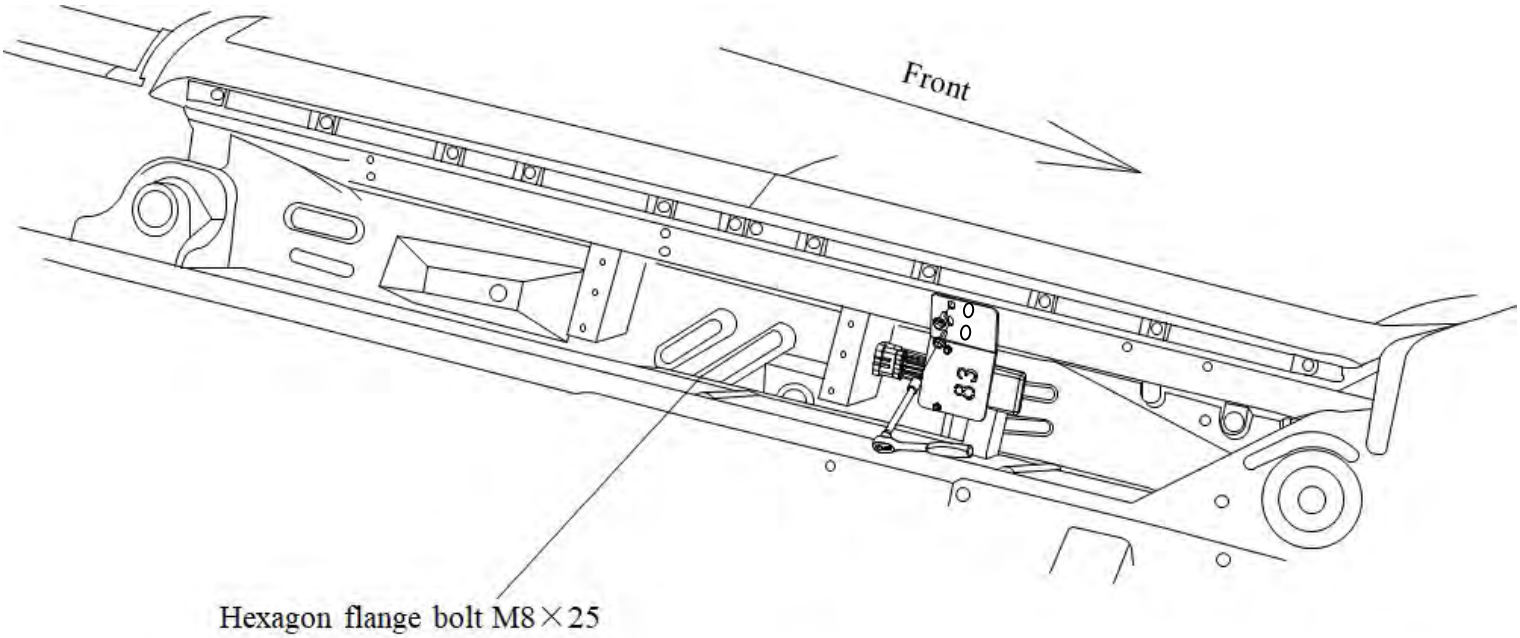

Step 3: Place the controller assembly over the corresponding holes in the passenger side rocker and screw the M8x25 hex head bolt, spring washer, and flat washer into the threaded holes. Torque to 26 ft-lbs.

NOTE: If your vehicle battery is on the driver side, install the controller assembly on the driver side rocker.

trailfortress.com/rough-country-power-running-boards-psr70911

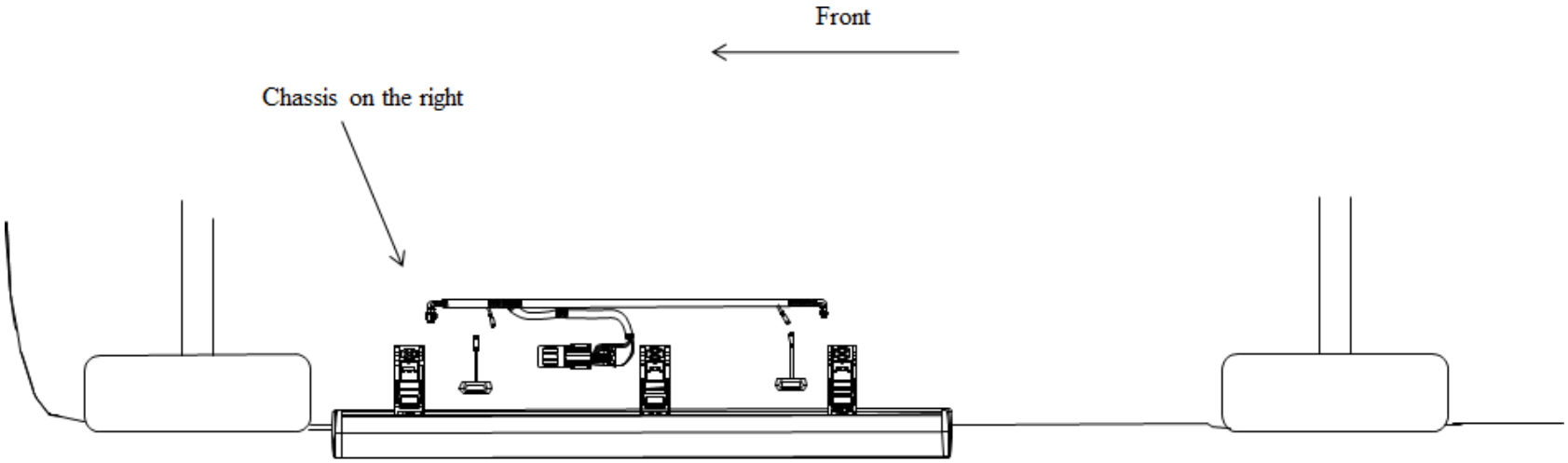

Step 4: Run the wiring harness along the frame of the passenger side of the vehicle. Secure the harness with wire ties. Make sure to avoid rubbing and pinch points along the path.

n as
wire

NOTE: If battery is on driver side, run the harness along the driver side frame.

trailfortress.com/rough-country-power-running-boards-psr70911

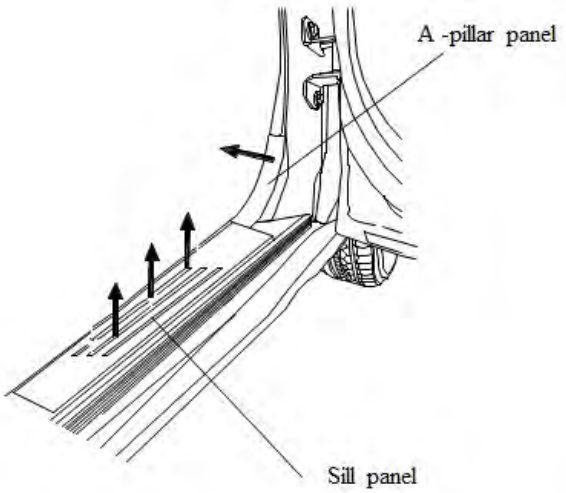

Figure 1

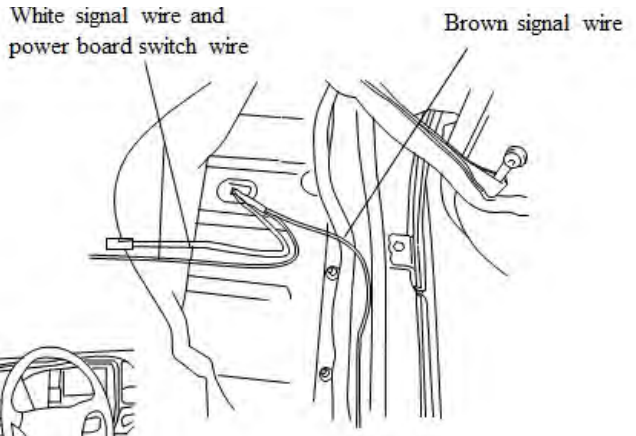

Figure 2

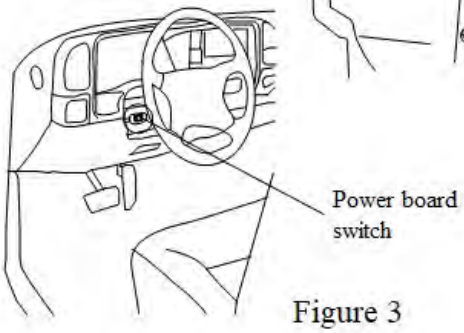

Figure 3

Step 5: Connection of the signal wire: Pry the scuff plate and kick panel on the passenger side in Figure 1. Pull the brown and white signal wire, and switch wire into the vehicle through the rubber grommet of the chassis on the passenger side in Figure 2. The white signal wire extends to the driver side of the vehicle under the carpet. Stick the power board switch to the left side under the steering wheel in Figure 3.

NOTE: If your vehicle battery is on the driver side, pull the three wires through the grommet on the driver side and route the white wire under the carpet to the passenger side.

trailfortress.com/rough-country-power-running-boards-psr70911

trailfortress.com/rough-country-power-running-boards-psr70911

Magnetic Inductor Installation

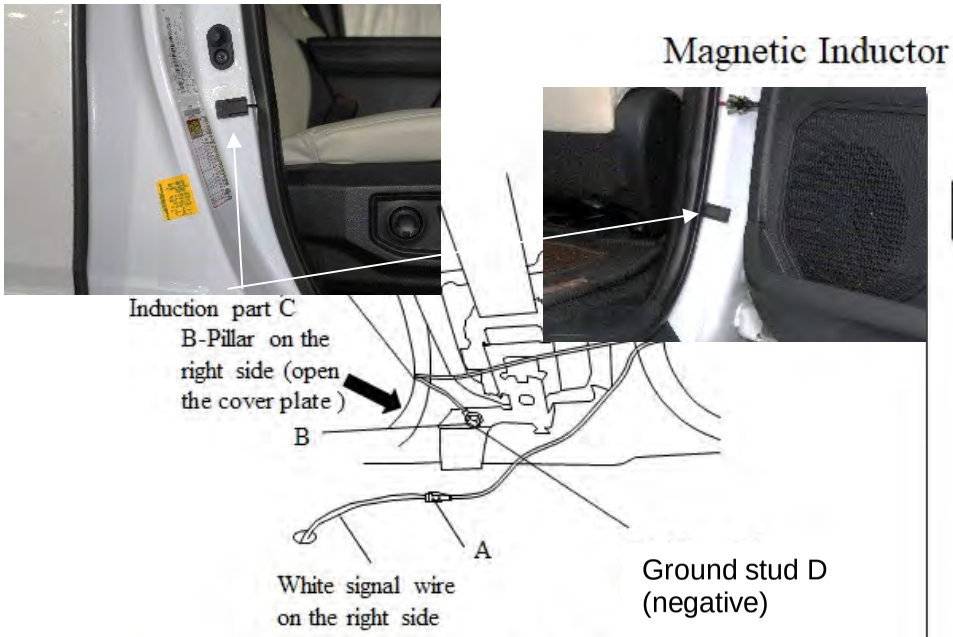

Step 6: Open the cover plate of the B-pillar on the passenger side of the vehicle. Expose the part as shown above. Connect the brown signal wire to terminal A of the magnetic inductor. Loosen the ground stud D and connect the fork terminal B to the ground stud and tighten. Stick the induction part C to both sides of the B-pillar and stick the magnet on the vehicle on the inside of the door so it lines up with the induction part C. The installation with the white signal wire is the same as installation with the brown signal wire.

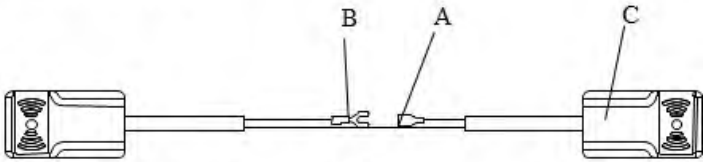

Wire Harness Magnetic Inductor

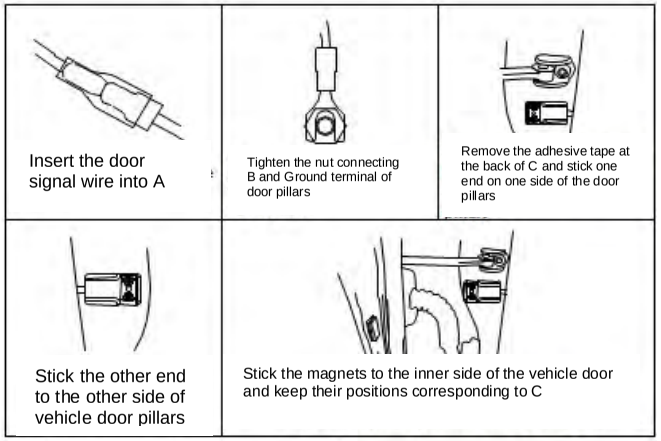

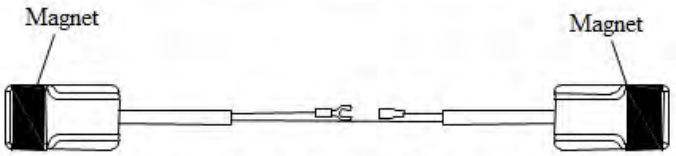

Magnets (shown in black) go over the rectangular portion of the modules.

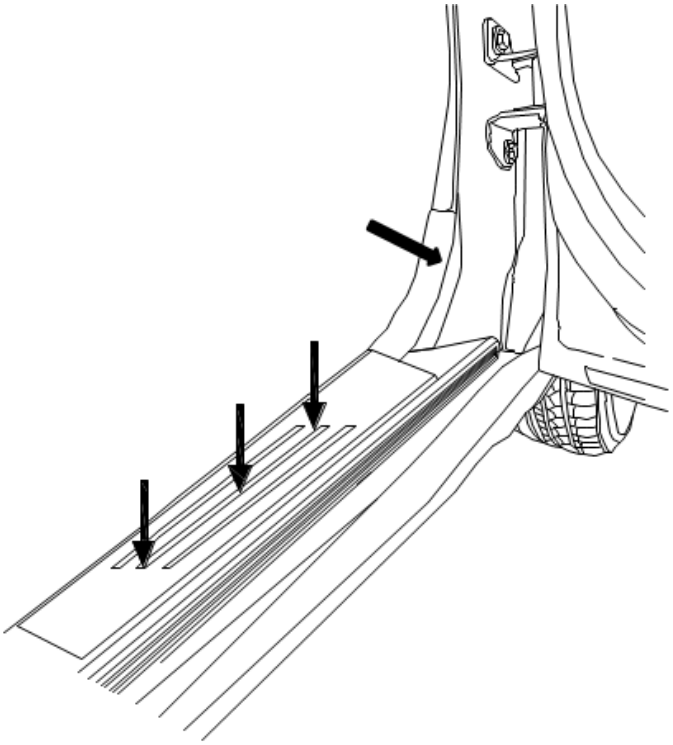

Step 7: Sort out the wiring harness and close the panels. The installation of the white signal wire is the same as the brown signal wire.

trailfortress.com/rough-country-power-running-boards-psr70911

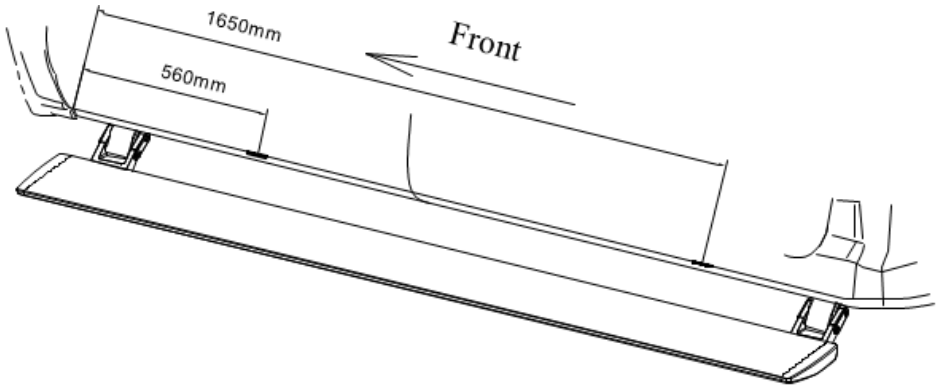

Step 8: Clean the surface where the LED lights will go with a rag and cleaner. Remove the double-sided adhesive sticker behind the LED light and stick it to the side of the car skirt in desired location.

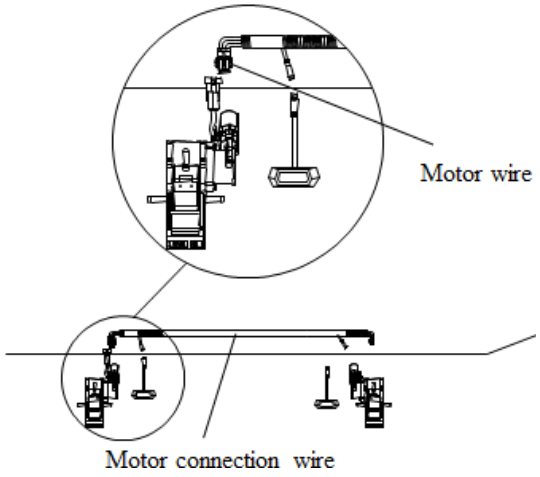

Step 9: Insert the fuses back into the fused links and tidy the wiring harness to avoid pinch points and rubbing. Test to make sure the power board is working normal.

trailfortress.com/rough-country-power-running-boards-psr70911

Summary of Electric Part

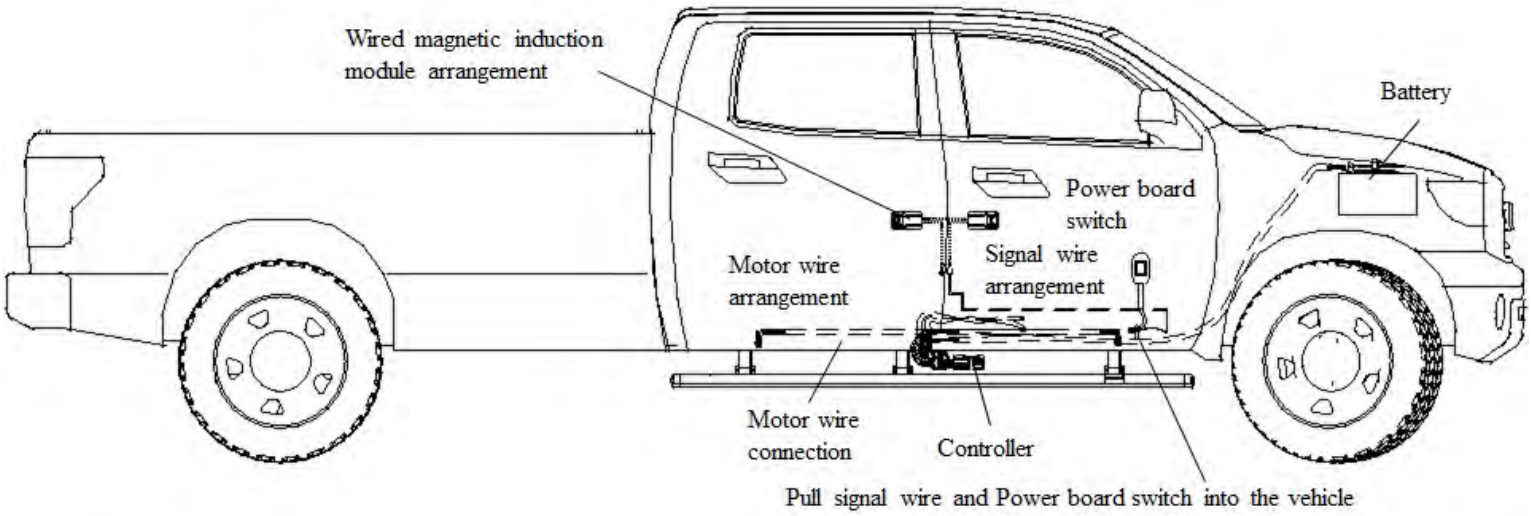

Check out the Power board switch of controller to make sure it is off. Insert back the fuse , arrange the wire harness in order. Check if all the wires are connected well and test if the power board can work normally . If it can work normally ,the board installation is completed. (If it can not work normally , please check the completeness of installation of each part.)

trailfortress.com/rough-country-power-running-boards-psr70911

Stick the power board switch with 3M tape under the left side of steering wheel.

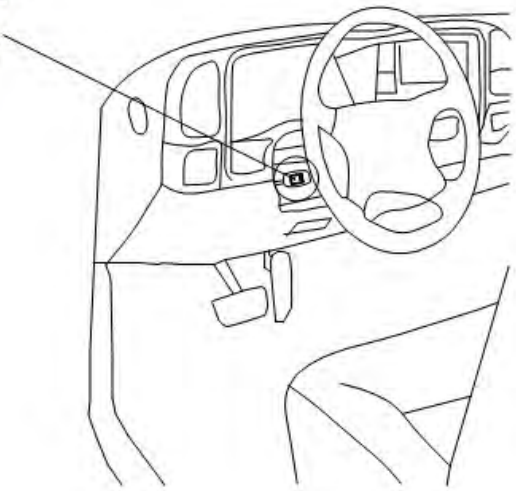

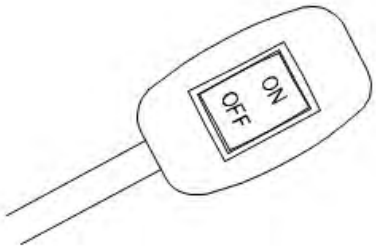

I. Function of power board switch

Turn off the switch when no need of power board or inconvenience of power board , then the power board will automatically get back and stop working to avoid any impact when use the vehicle .

II. Power board switch using method:

1. Press power board switch button to set "ON".And at the same time, the power board will return to its normal working status.
2. Press the power board switch button to set "OFF". And at the same time, the steps will automatically go back and stop working.

Torque Specs:

Size	Grade 5	Grade 8	Size	Class 8.8	Class 10.9
5/16”	15 ft/lbs	20ft/lbs	6MM	5ft/lbs	9ft/lbs
3/8”	30 ft/lbs	35ft/lbs	8MM	18ft/lbs	23ft/lbs
7/16”	45 ft/lbs	60ft/lbs	10MM	32ft/lbs	45ft/lbs
1/2”	65 ft/lbs	90ft/lbs	12MM	55ft/lbs	75ft/lbs
9/16”	95 ft/lbs	130ft/lbs	14MM	85ft/lbs	120ft/lbs
5/8”	135ft/lbs	175ft/lbs	16MM	130ft/lbs	165ft/lbs
3/4”	185ft/lbs	280ft/lbs	18MM	170ft/lbs	240ft/lbs

By purchasing any item sold by Rough Country, LLC, the buyer expressly warrants that he/she is in compliance with all applicable, State, and Local laws and regulations regarding the purchase, ownership, and use of the item. It shall be the buyers responsibility to comply with all Federal, State and Local laws governing the sales of any items listed, illustrated or sold. The buyer expressly agrees to indemnify and hold harmless Rough Country, LLC for all claims resulting directly or indirectly from the purchase, ownership, or use of the item

trailfortress.com/rough-country-power-running-boards-psr70911