Rough Country PSR61920 Installation Instructions

Power Running Boards for Ram 1500 Crew Cab (2019-2025)

Part number: PSR61920

trailfortress.com/rough-country-power-running-boards-psr61920

Scan for fitment, price and install help

PRBOX61920

2010-23 Ram 1500 Crew Cab

Thank you for choosing Rough Country for all your vehicle needs.

Please read instructions before beginning installation. Check the kit hardware against the kit contents shown below. Be sure you have all needed parts and know where they go.
If questions exist, please call us @1-800-222-7023. We will be happy to answer any questions concerning this product.
Check all fasteners for proper torque. Check to ensure for adequate clearance between all components.
Periodically check all hardware for tightness.

KIT CONTENTS:
- Front Motor Left x1
- Rear Motor Left x1
- Rear Motor Right x1
- Front Motor Right x1
- Power Board Switch x1
- Controller Assembly x1
- Control Input Wiring Harness x1
- Step Boards x2
- LED Lights x4

Wired Magnetic Sensors
- Module x2
- Magnet x4

TOOLS NEEDED:
- 5mm Allen
- 13mm Socket
- Ratchet
- Torque Wrench
- Weather Proof Tape

HARDWARE INCLUDED:
- M8 x30 Hex Nut x14
- M8 Washer x14
- M8 Lock Washer x14
- Wire Ties x25





Product Packing List

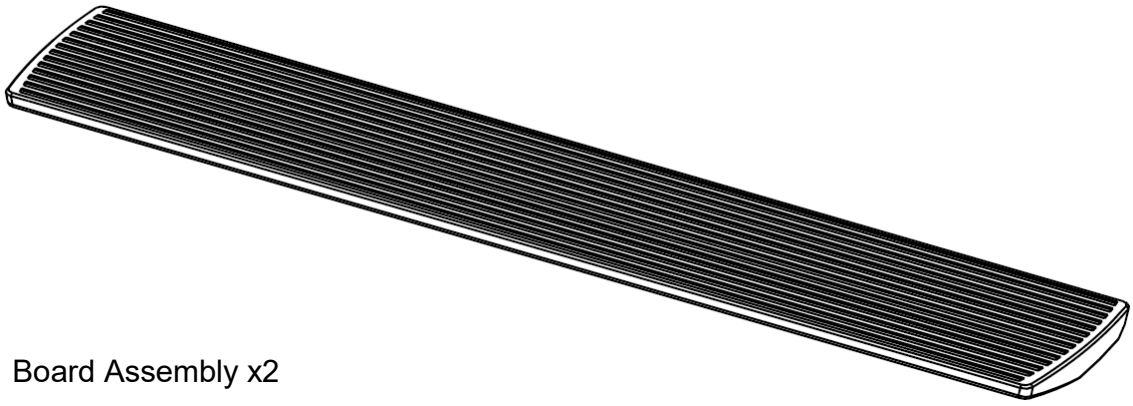

Board Assembly x2

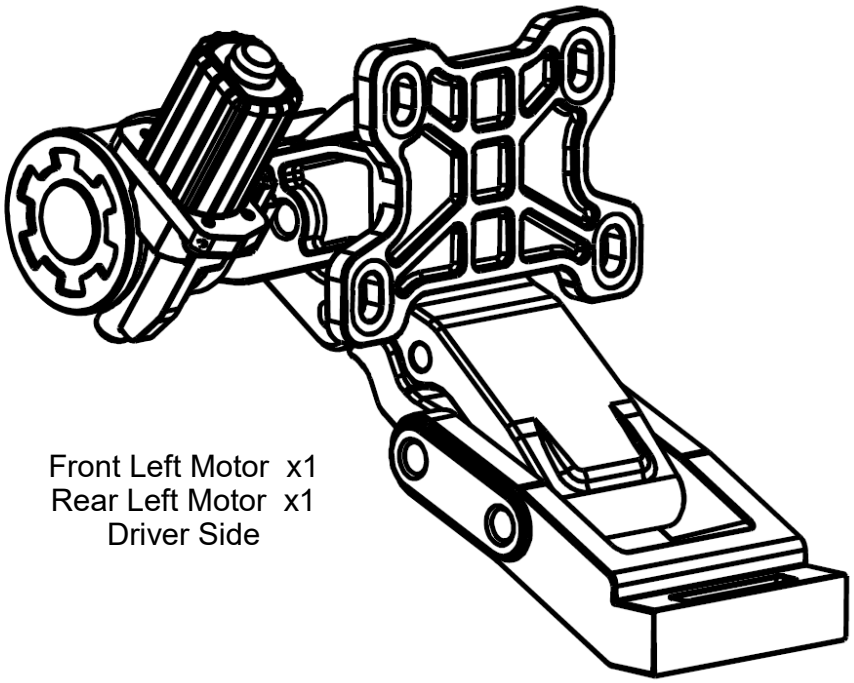

Front Left Motor x1
Rear Left Motor x1
Driver Side

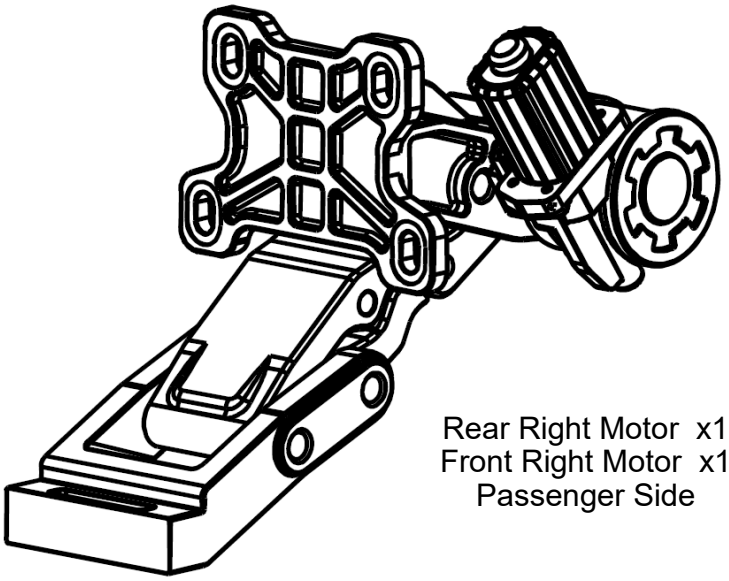

Rear Right Motor x1
Front Right Motor x1
Passenger Side

Product Packing List

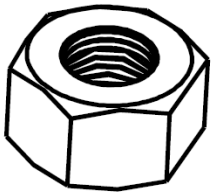

8mm Hex Nut x14

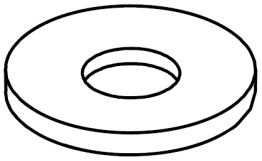

Washer x14

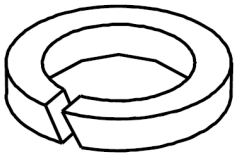

Lock Washer x14



M6 x25 Socket Cap Screw x8

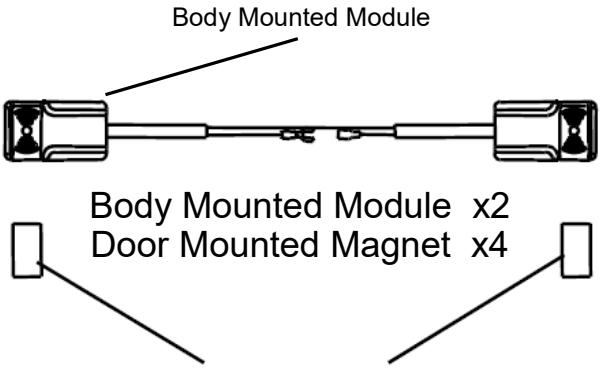



Wire Tie x25

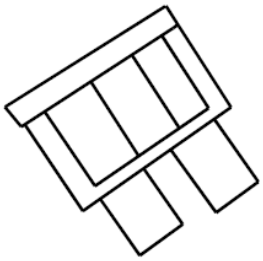

Fuse x2

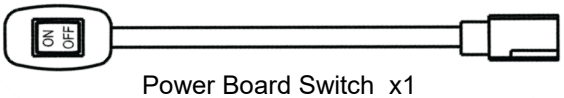

Power Board Switch x1

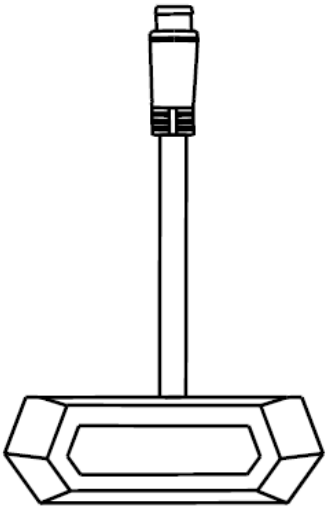

LED Lights x4

Product Packing List

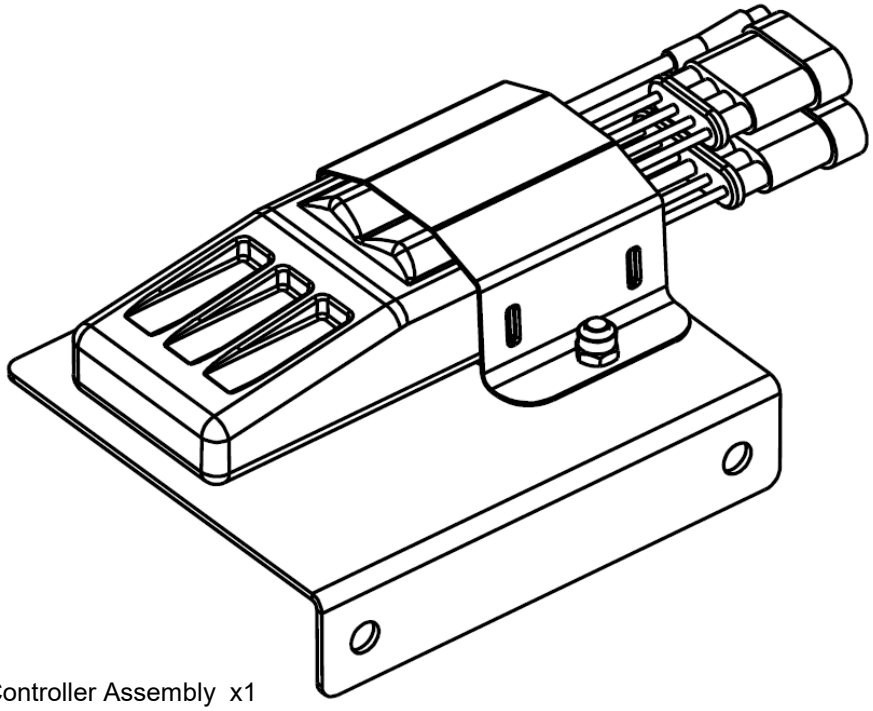

Controller Assembly x1

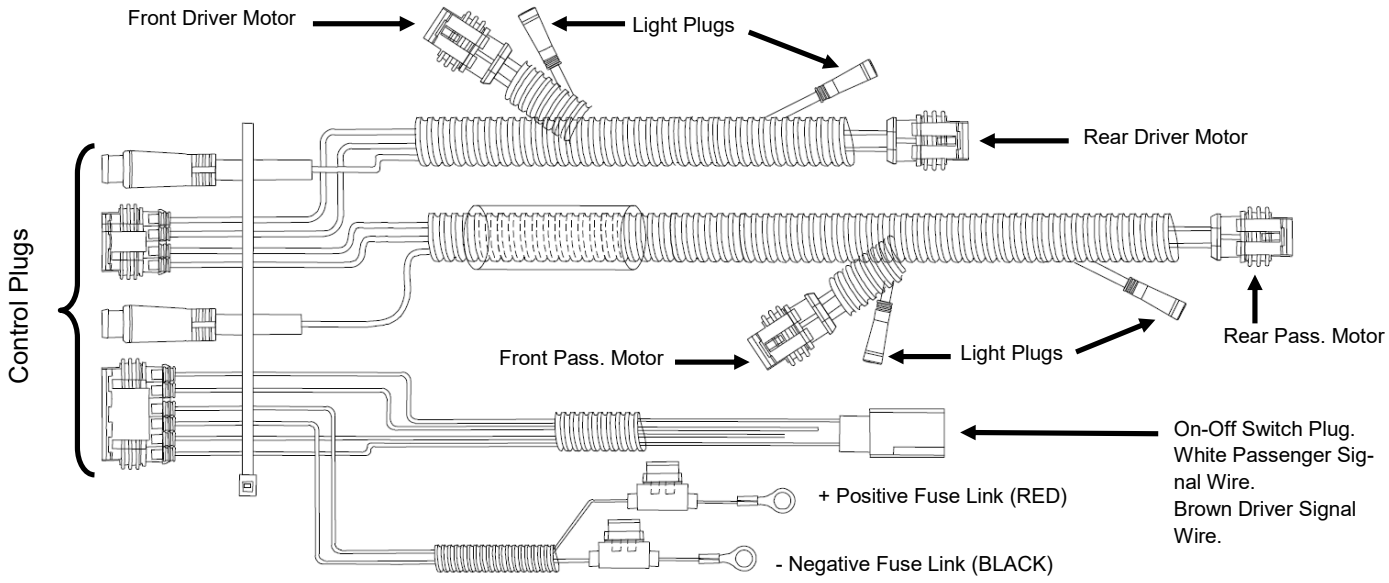

Wiring Harness x1

Installation Position of the Driver Side Motors and Controller Assembly

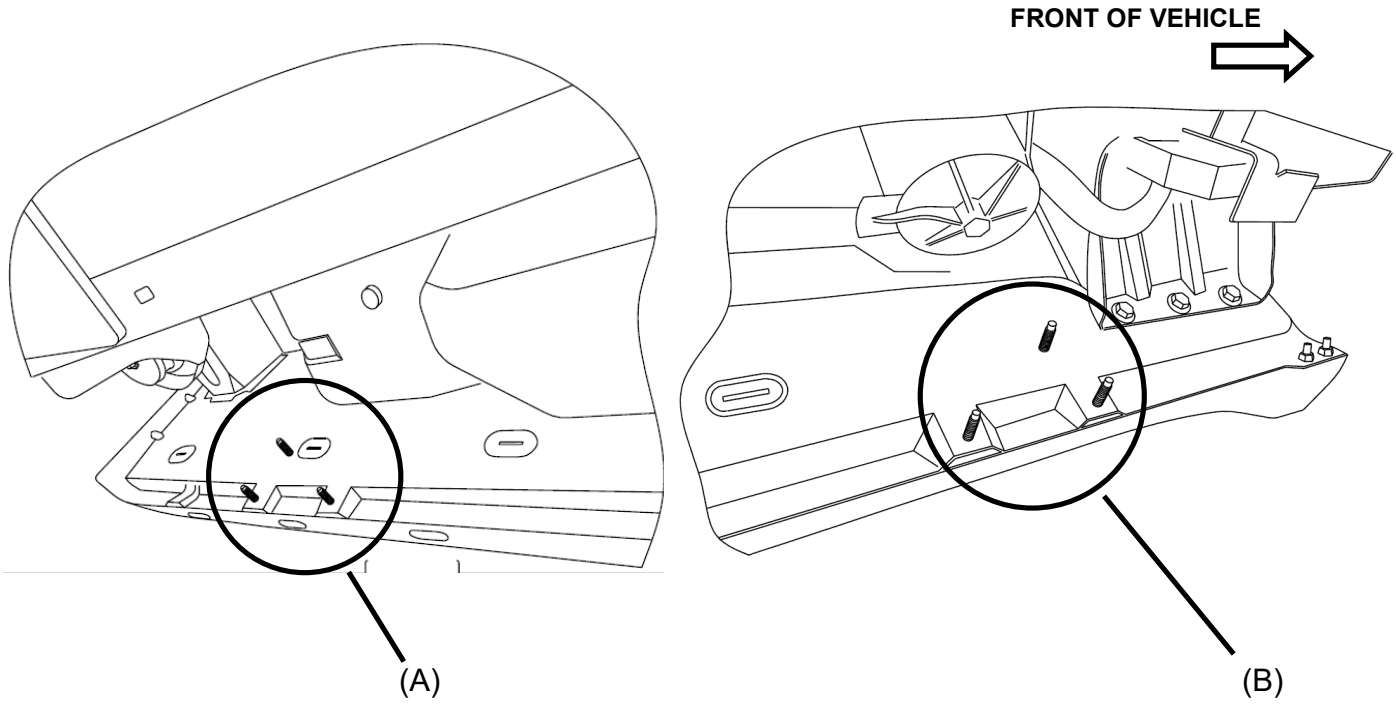

Diagram shows the threaded studs on the inner rocker panel on the driver side from beneath the vehicle.

A. Installation Position for Rear Motor (Driver Side)

B. Installation Position for the Front Motor (Driver Side)

Driver Front Motor Installation

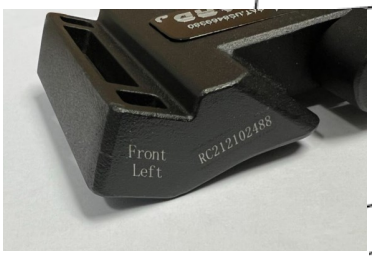

Mounting location found on the step board mount as shown in the photo.

Photo 1

M8 Hex Nut x3
Washer x3
Lock Washer x3

FRONT OF VEHICLE

1. Place the motor onto the front (3) OE studs in the rocker panel. Secure using (3) M8 hex nuts (3) washers and (3) lock washers. Snug the motor only using 13mm socket. **See Photo 1.**

Photo 2

FRONT OF VEHICLE

M8 Hex Nut x3
Washer x3
Lock Washer x3

2. Place the motor onto the rear (3) OE studs in the rocker panel. Secure using (3) M8 hex nuts (3) washers and (3) lock washers. Snug the motor only using 13mm socket. **See Photo 2.**

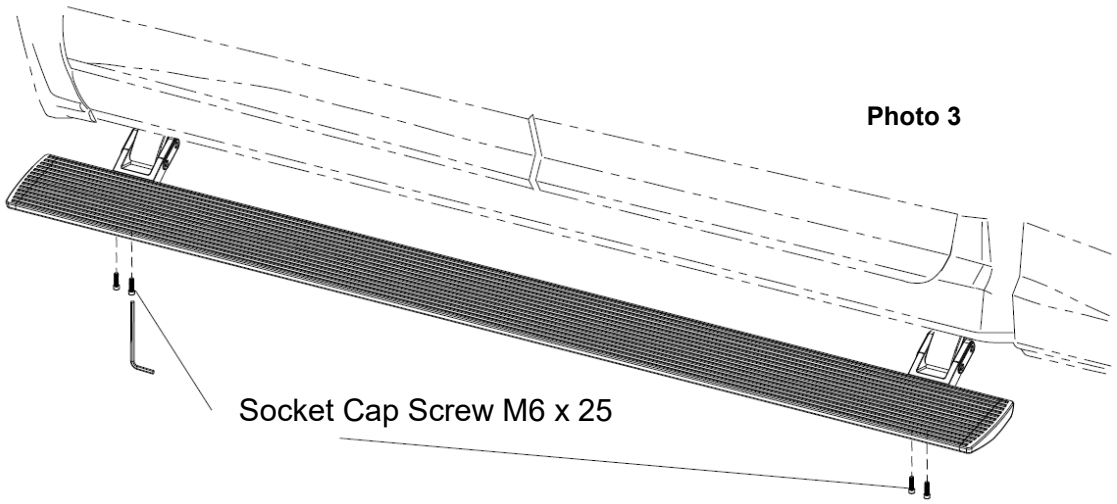

3. Install the step board onto the driver front and rear motor brackets. Secure the board using (2) M6 x 25 Socket Cap Screw bolts into each motor bracket.

NOTE: Center the step to the cab of the vehicle. Do not tighten at this time, snug only using a 5mm Allen. **See Photo 3.**

Installation of the controller

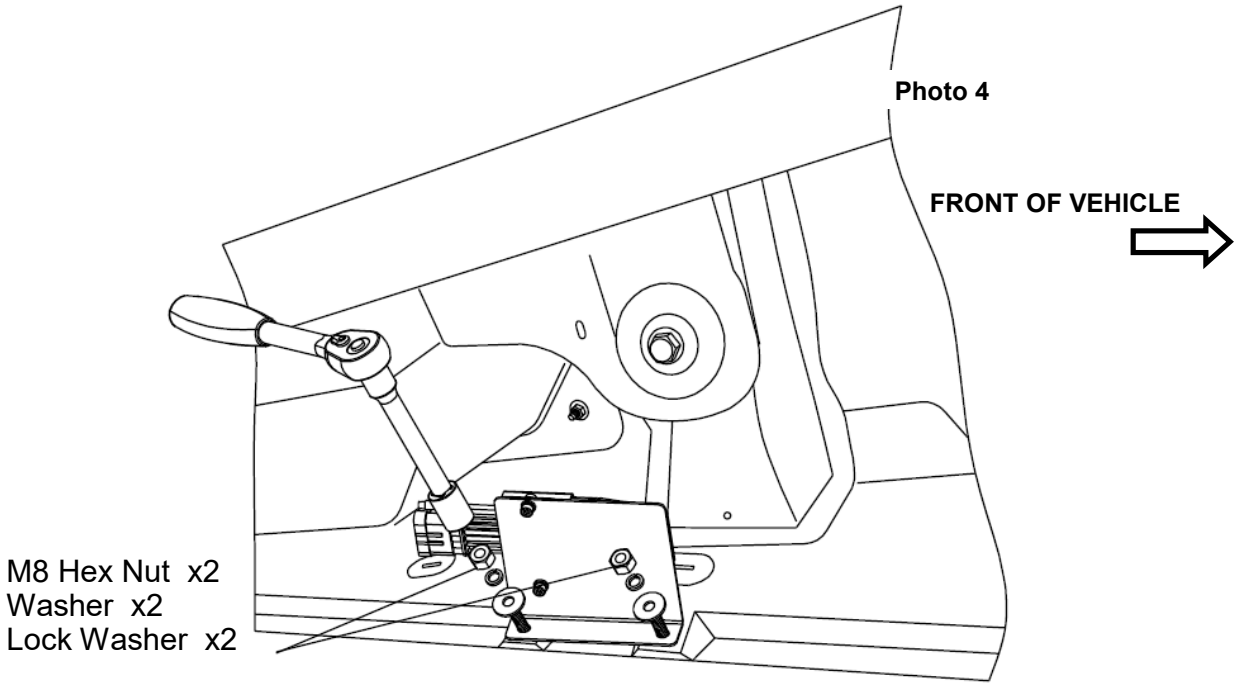

4. At this time install the Passengers Side step motors and step board following the steps from 1-3.
5. Secure the controller assembly to the rocker panel studs using (2) M8 hex nuts (2) washers and (2) lock washers. Tighten using a 13mm socket. **See Photo 4**

Photo 5

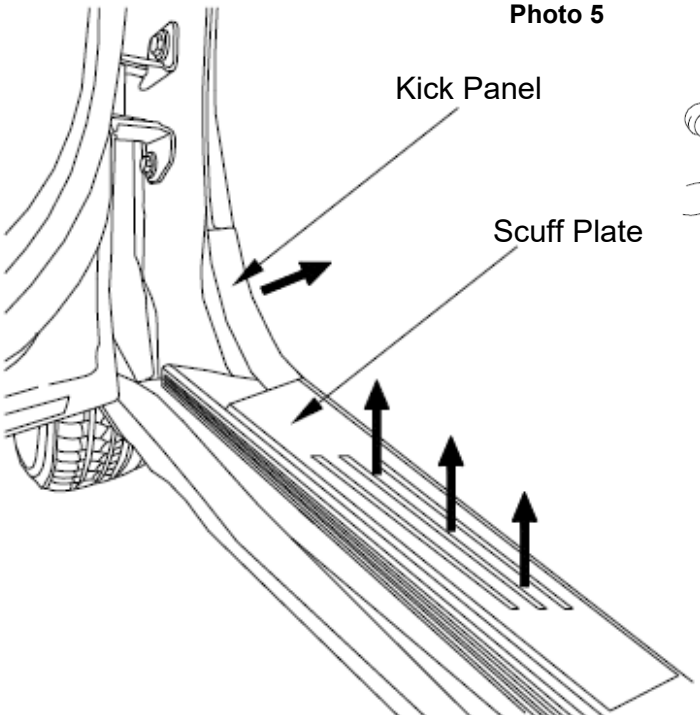

Photo 6

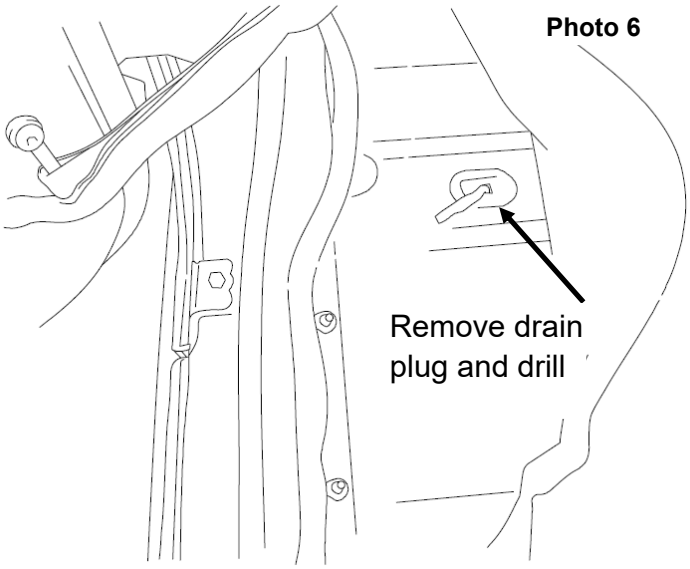

Driver side shown.

6. Remove the kick panel and the scuff plate on the Driver and Passenger side of the vehicle. **See Photo 5.**
7. Lift the carpet to expose and remove the drain plug on the driver side. In the center of the drain plug drill a hole using a 1/2” drill, re-install into the floor of the cab. **See Photo 6.**

Wiring Harness Installation

Photo 7

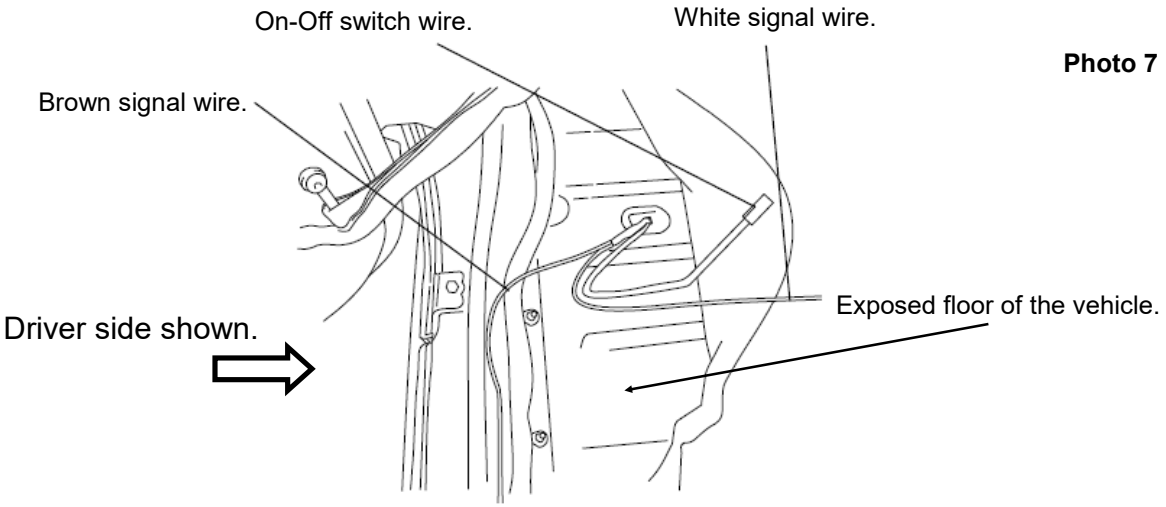

8. Install the supplied wiring harness’s Brown, White and On-Off switch wire through the hole drilled in the drain plug under the floor of the vehicle to the inside of the cab. **See Photo 7.**

NOTE: Apply waterproof tape to the wiring harness and the drain plug once the wiring harness has been fully installed.

Photo 8

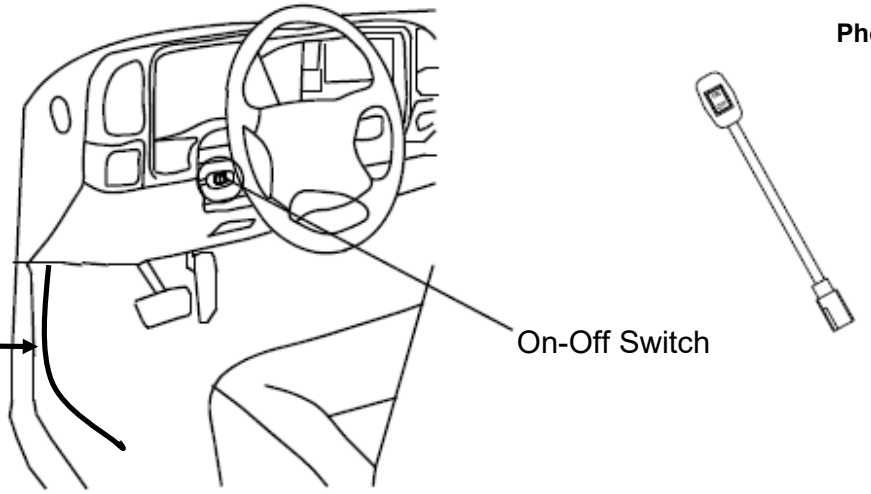

NOTE: Secure the On-Off Switch wiring harness from the dash to the drain plug under carpet.

9. Mount the On-Off switch. Clean the area of installation and remove the covering on the double sided tape and apply it to the dash. Switch shown on the upper dash. **See Photo 8.**
10. Connect the On-Off switch to the wiring harness installed in the floor of the cab. Leave switch in the On position, this will keep the motors in the extended position as installed to the vehicle when power is connected. Secure the On-Off switch wiring harness behind the dash to the drain plug under the carpet.

NOTE: Normal function of the On-Off switch once power has been connected to the positive and negative fused links on the battery. (On) the steps will extend for use and entering the vehicle. Steps will retract when both doors per side are closed connecting the magnet to the module. (Off) the steps will retract to the body of the vehicle even when the doors are open and the magnet is away from the module.

FRONT OF VEHICLE

Photo 9A



Front Passenger Door

Photo 9B



Rear Passenger Door Module (C)

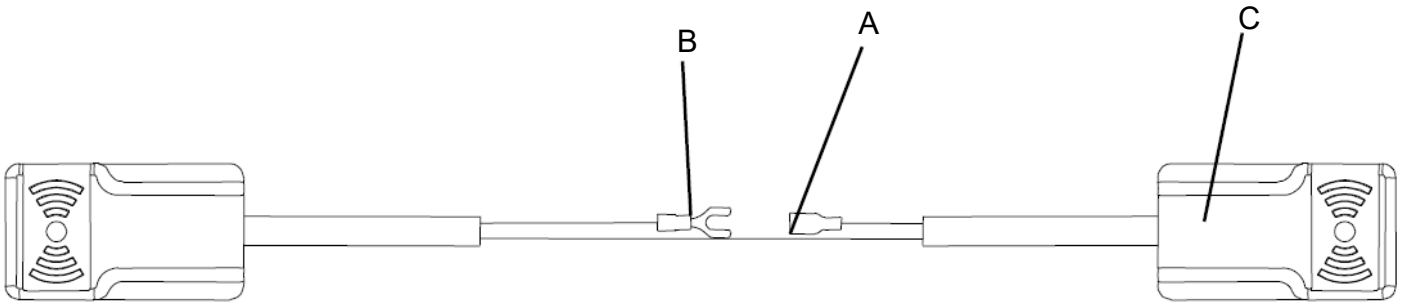

11. Remove the interior trim panel on the passenger side of the vehicle (*If interior trim is equipped with air bag, use caution*). Connect the White signal wire from the wiring harness to terminal (A) on the module. Connect module wire (B) to the vehicle ground. Remove the double sided tape backing and place the front module (C) in a secure location to the inside of the door jamb. **See Photo 9 A.** Remove the cover off of the double sided tape and place the place the rear module (C) in a secure location to the inside of the door jamb. **See Photo 9 B.**

12. Follow step 11 and install the driver side module using the brown wire from the supplied wiring harness. *Photos 9A and 9B are shown from the passenger side of the vehicle*.

NOTE: The magnets will be installed in a later step after the power has been connected.

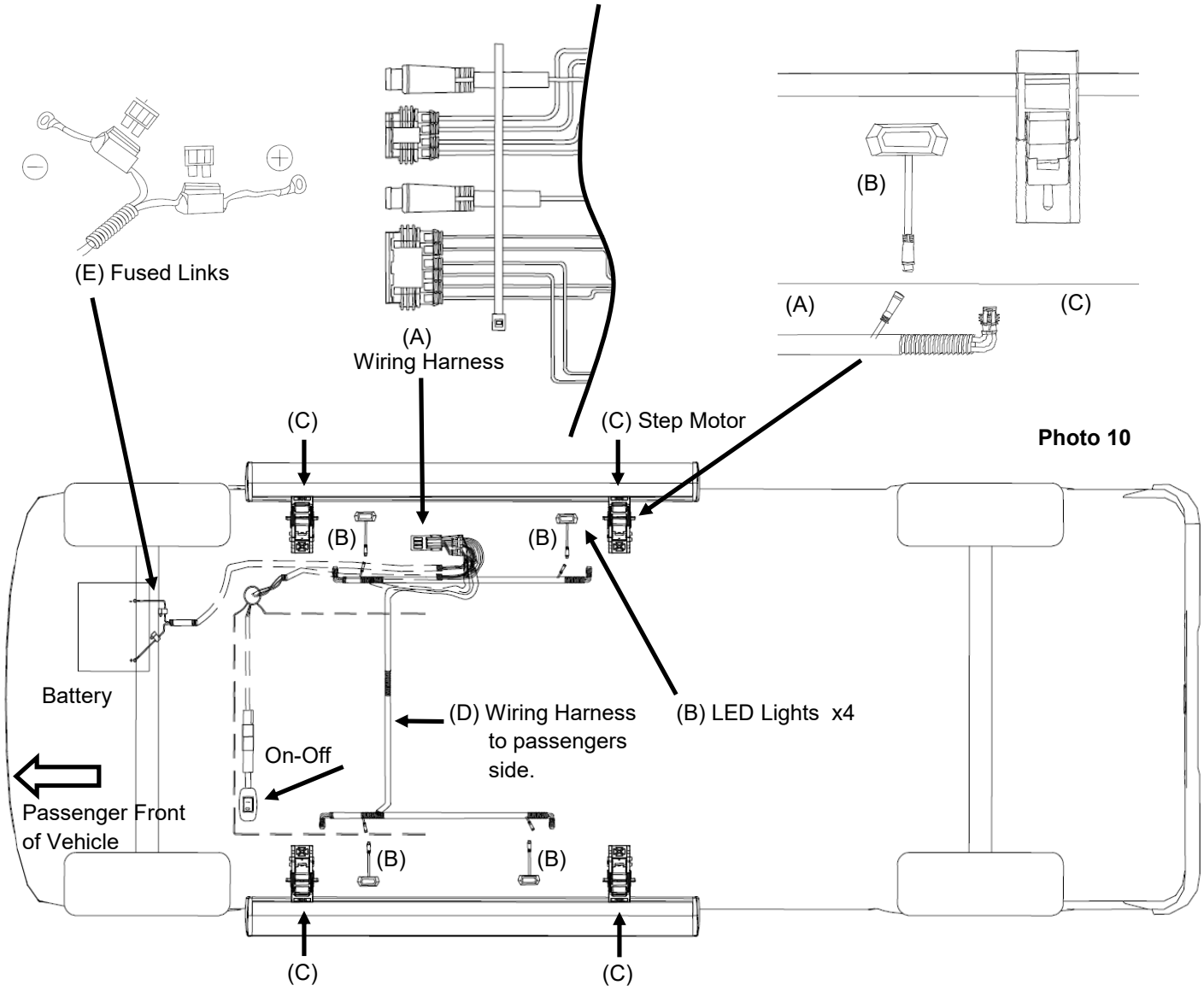

13. (A) Connect the 4 plugs of the wiring harness to the controller assembly mounted to the body of the vehicle on the driver side. **See Photo 10.**
14. (B) Mount the (4) LED Lights. Clean the surface of the pinch weld under the center of each door on the driver and passenger side of the vehicle. Remove the double sided tape backing and apply to the pinch weld.
15. (A) Route the wiring harness along the frame of the driver side.
16. (C) Connect the step motor labeled to the corresponding wiring harness (Driver Side) Front Left Motor and Rear Left Motor.
17. (B) Connect the LED light plugs on the driver side.
18. (D) Route the wiring harness across the frame to the passenger side of the vehicle.
19. (C) Connect the step motor labeled to the corresponding wiring harness (Passengers Side) Front Right Motor and Rear Right Motor.
20. (B) Connect the LED light plugs on the passenger side.
21. (E) Route the fused link harness along the driver side frame up to the battery box, secure the wiring harness with the supplied wire ties away from heat or moving parts. Connect the fused link's to the Positive and Negative side of the battery.

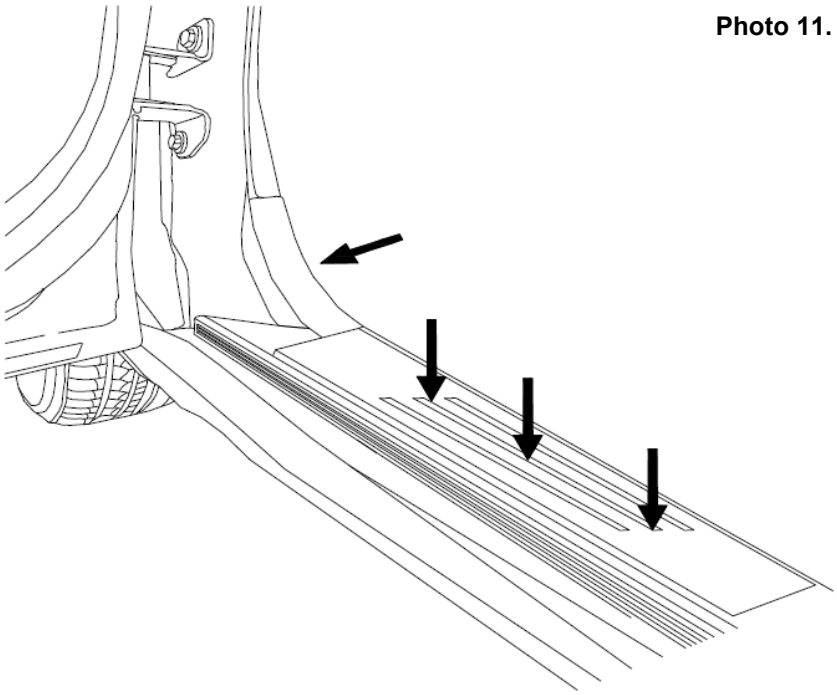

Photo 11.

22. Adjust the carpet into place and re-install the B-pillar trim, kick panel and the scuff plate on the driver and passenger side of the vehicle. **See Photo 11 .**

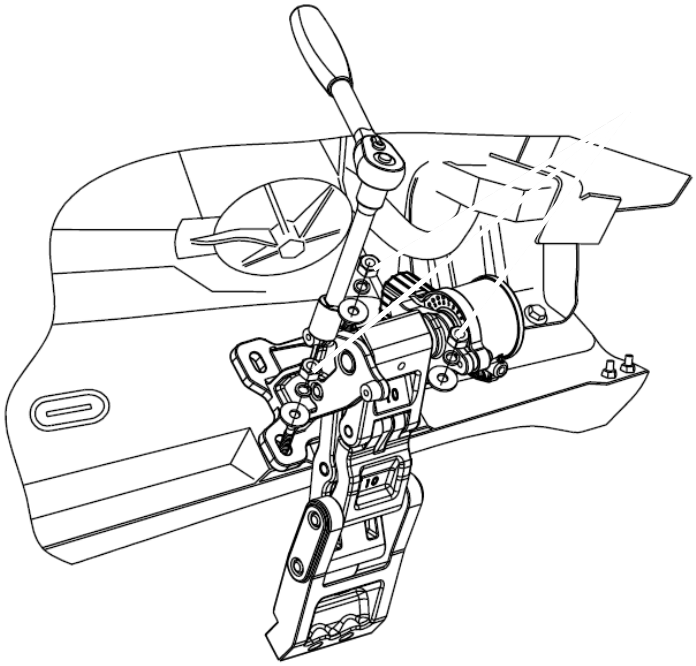

Photo 12

23. Using the (On-Off) switch cycle the steps (2-3 Times) leave them in the down position. The switch will be in the (On) position.
24. Tighten the moto bracket to the rocker panel studs using a 13mm socket to 23ft/lbs. Steps should work in a smooth motion with no binding. **See Photo 12.**
25. Tighten the step to the motor bracket using a 5mm Allen to 14ft/lbs.

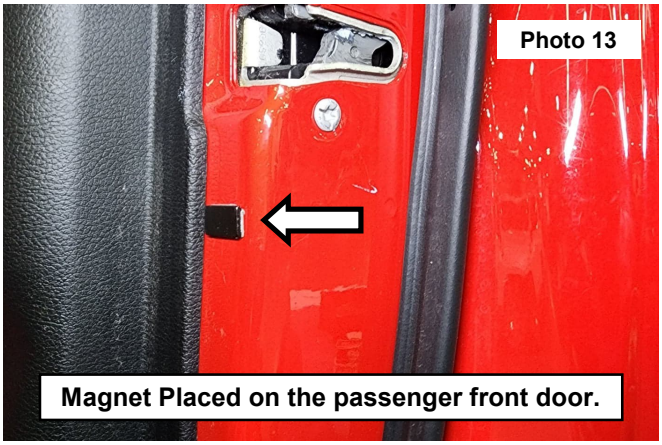

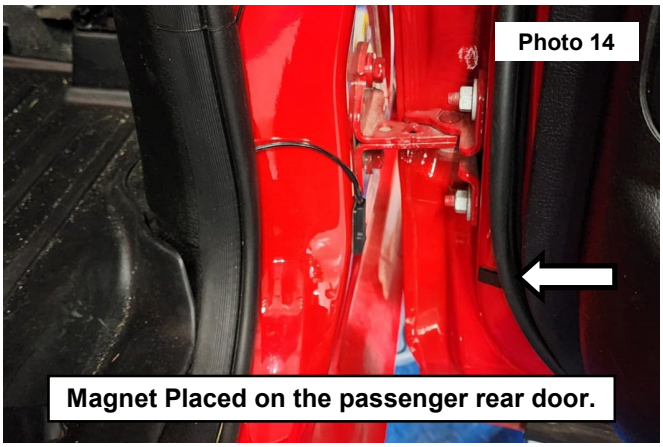

26. Place the magnet on the vehicle door aligned with the module. (Shown on the passenger side) for aluminum door vehicles this can be done with painter's tape to test and ensure it will work correctly. **See Photos 13 and 14.**
27. Ensure the On-Off switch is in the ON position. Now test the front and rear doors on the right and left side of the vehicle. If each one works correctly, the magnets are in line with the module. Mark the magnets position on each of the 4 doors, remove the covering from the double sided tape and stick the magnet to the door in the marked position.

NOTE: The On-Off switch will remain in the On position for normal use. We recommend the switch be in the Off position in icy or off roading conditions to prevent binding or damage to the step board, motor or motor bracket.

Troubleshooting Guide

Steps not working.
- On/Off Switch in On position
- Check for proper Power and Ground connections to battery
- Check Fuses in the Positive and Negative wires to the battery
- Check Ground connection on Pass and Driver side at B-Pillar
- Check all plugs and connections to ensure they are seated properly and making a good connection

Steps work with On/Off Switch but not with doors opening and closing.
- Check Module to Magnet alignment on doors
- Use a magnet to position over module

Steps drop when door is closed and retract when door is opened.
- Motors will operate in reverse polarity. Check the fused links on the battery for Positive and Negative connection

Torque Specs:

Size	Grade 5	Grade 8	Size	Class 8.8	Class 10.9
5/16”	15 ft/lbs	20ft/lbs	6MM	5ft/lbs	9ft/lbs
3/8”	30 ft/lbs	35ft/lbs	8MM	18ft/lbs	23ft/lbs
7/16”	45 ft/lbs	60ft/lbs	10MM	32ft/lbs	45ft/lbs
1/2”	65 ft/lbs	90ft/lbs	12MM	55ft/lbs	75ft/lbs
9/16”	95 ft/lbs	130ft/lbs	14MM	85ft/lbs	120ft/lbs
5/8”	135ft/lbs	175ft/lbs	16MM	130ft/lbs	165ft/lbs
3/4”	185ft/lbs	280ft/lbs	18MM	170ft/lbs	240ft/lbs

By purchasing any item sold by Rough Country, LLC, the buyer expressly warrants that he/she is in compliance with all applicable, State, and Local laws and regulations regarding the purchase, ownership, and use of the item. It shall be the buyers responsibility to comply with all Federal, State and Local laws governing the sales of any items listed, illustrated or sold. The buyer expressly agrees to indemnify and hold harmless Rough Country, LLC for all claims resulting directly or indirectly from the purchase, ownership, or use of the items.