Rough Country PSR61030 Installation Instructions

PSR61030

Part number: PSR61030

trailfortress.com/rough-country-power-running-boards-psr61030

Scan for fitment, price and install help

JEEP JL E-Boards 2018-23

Thank you for choosing Rough Country for all your vehicle needs.

Please read instructions before beginning installation. Check the kit hardware against the kit contents shown below. Be sure you have all needed parts and know where they go.
If questions exist, please call us @1-800-222-7023. We will be happy to answer any questions concerning this product.
Check all fasteners for proper torque. Check to ensure for adequate clearance between all components.
Periodically check all hardware for tightness.

KIT CONTENTS (2D):
Board Assembly x2
Front Motor Left x1
Front Motor Right x1
Rear Motor Left x1
Rear Motor Right x1
Motor Protective Plate L x1
Motor Protective Plate R x1
Controller Assembly x1
LED Lights x4
Power Board Switch x1
Wiring Harness

Wired Magnetic Sensors
Module x2
Magnet x2

TOOLS NEEDED:
5mm Allen
13mm Wrench
18mm Wrench
Wire Cutter/Stripper
Weatherproof Tape

HARDWARE INCLUDED (2D):
Short M8 T-bolt x1
Long M8 T-bolt x1
M12 T-bolt x2
M12 Lock Washer x2
12mm Spring Washer x4
12mm Flat Washer x4
M12 Hex Nut x2
8mm Spring Washer x14
8mm Flat Washer x14
M6x25mm Socket Cap Screw x8
M8x25mm Hex Head Bolt x8
M8x35mm Hex Head Bolt x4
M12x35mm Hex Head Bolt x2
M8 Hex Nut x2
M12 Tension Block x2
Wire Tie x25
Fuse x2



KIT CONTENTS (4D):
Board Assembly x2
Front Motor Left x1
Front Motor Right x1
Rear Motor Left x1
Rear Motor Right x1
Motor Protective Plate L x1
Motor Protective Plate R x1
Controller Assembly x1
LED Lights x4
Power Board Switch x1
Wiring Harness

Wired Magnetic Sensors
Module x2
Magnet x4

HARDWARE INCLUDED (4D):
M6x25mm Socket Cap Screw x8
M8x25mm Hex Head Bolt x6
M8x35mm Hex Head Bolt x8
M12x35mm Hex Head Bolt x2
Mounting Plate x2
12mm Spring Washer x2
12mm Flat Washer x2
8mm Spring Washer x14
8mm Flat Washer x14
M12 Tension Block x2
Wire Tie x25
Fuse x2

Product Packing List

Board Assembly x2

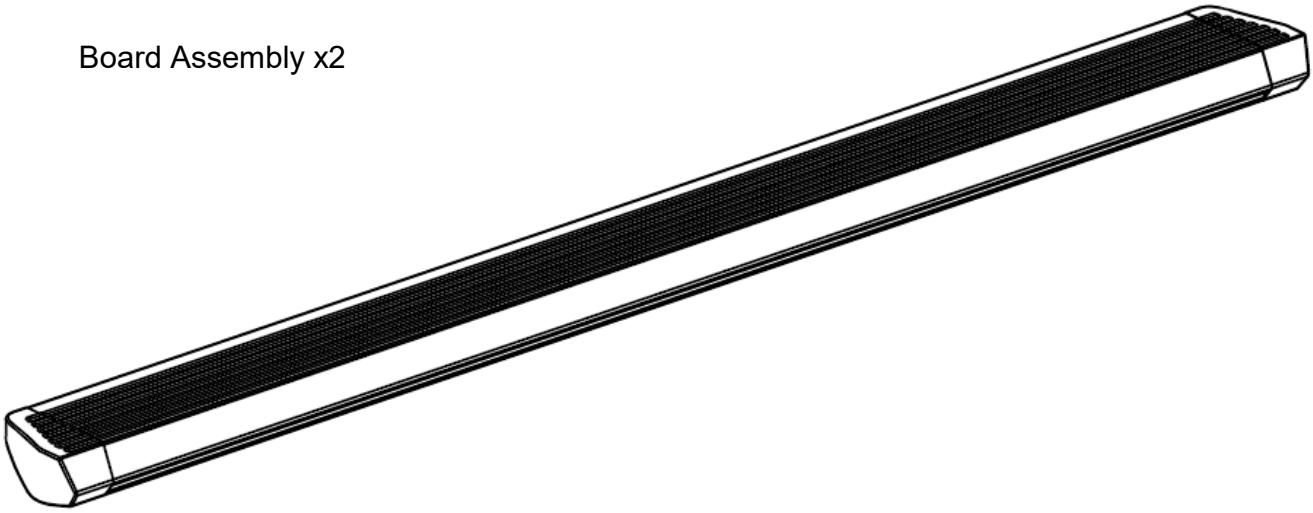

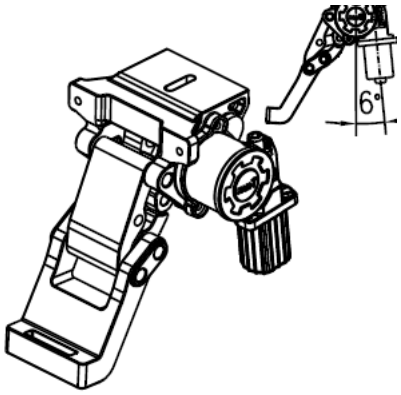

Front Left Motor x1
Driver Side

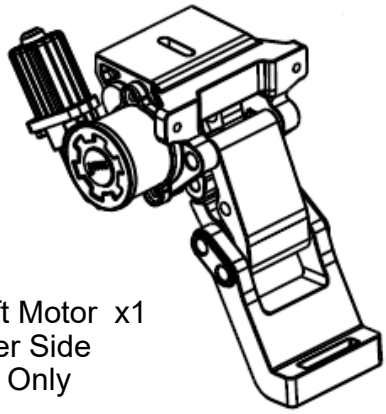

Rear Left Motor x1
Driver Side
4D Only

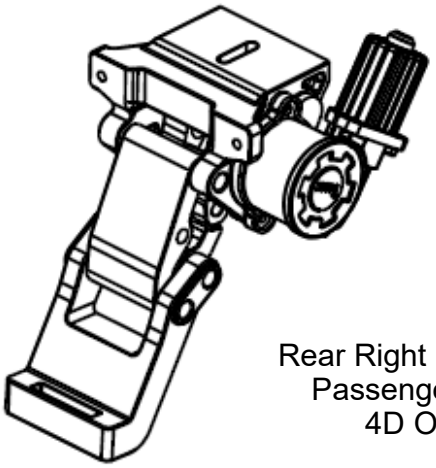

Rear Right Motor x1
Passenger Side
4D Only

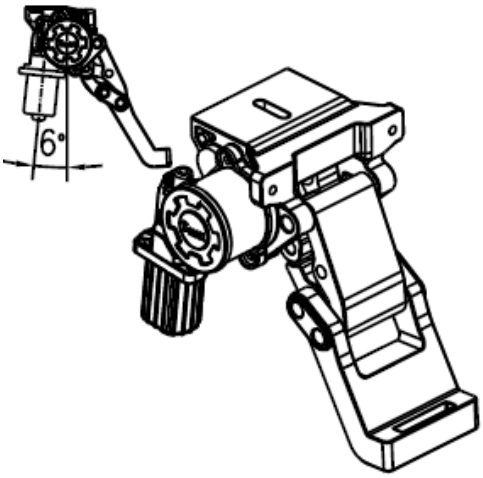

Front Right Motor x1
Passenger Side

trailfortress.com/rough-country-power-running-boards-psr61030

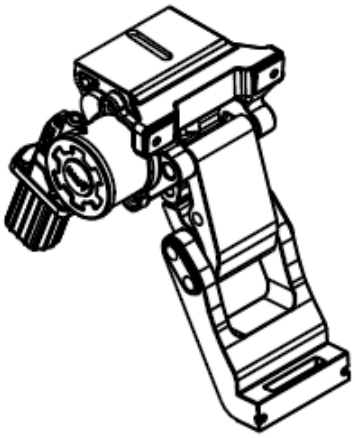

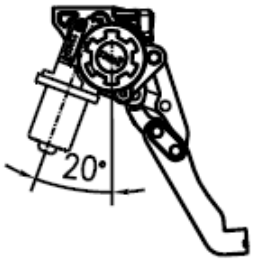

Rear Right Motor x1
Passenger Side
2D Only

Rear Left Motor x1
Driver Side
2D Only

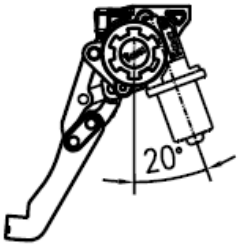

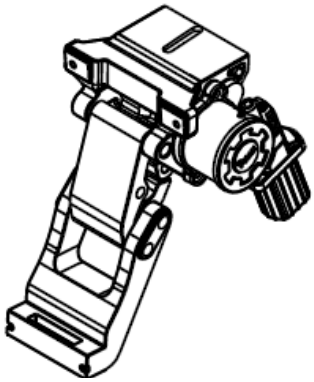

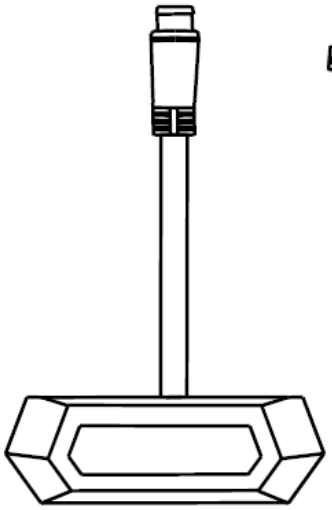

LED Lights x4

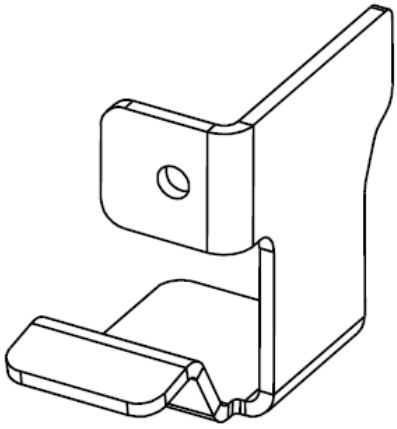

Motor Protective Plate Left x1
2D Only

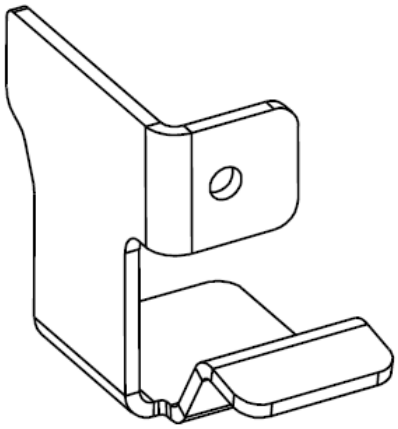

Motor Protective Plate Right x1
2D Only

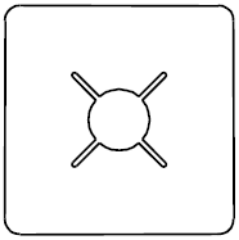

M12 Lock Washer x2
2D Only

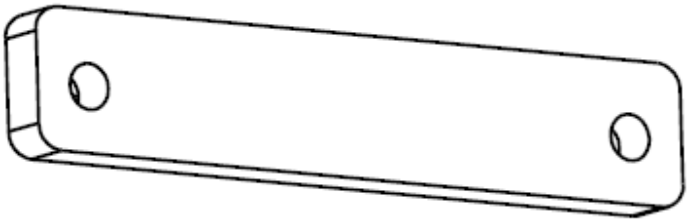

Mounting Plate x2
4D Only

trailfortress.com/rough-country-power-running-boards-psr61030

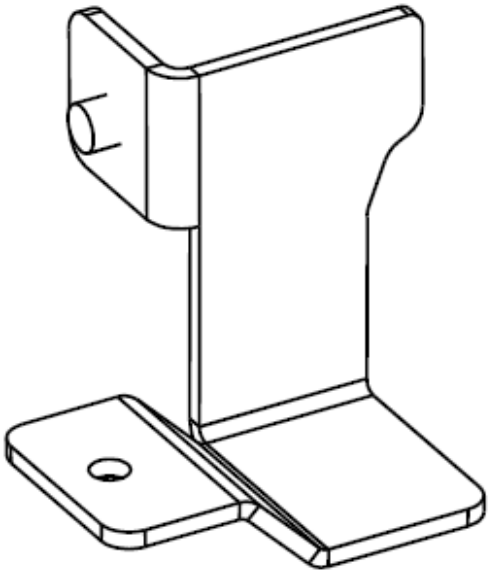

Motor Protective Plate Left x1
Driver Side 4D

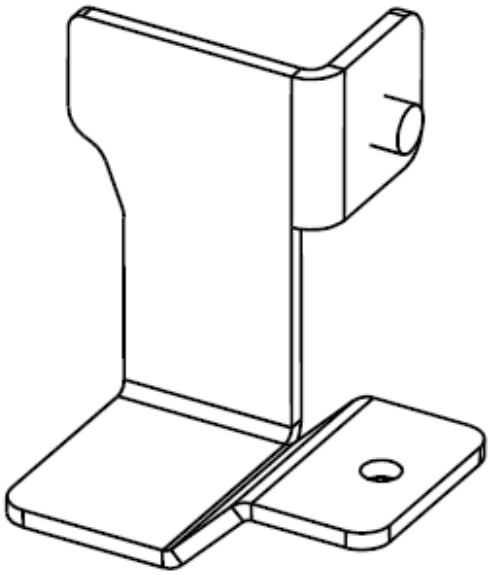

Motor Protective Plate Right x1
Passenger Side 4D

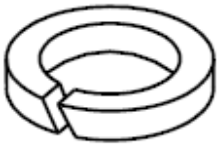

12mm Spring Washer
2D x4
4D x2

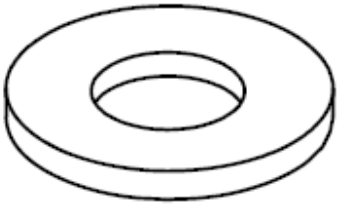

Large 12mm Flat Wash-
er
2D x4

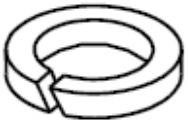

8mm Spring Washer
2D x14
4D x14

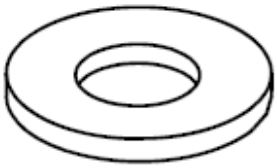

8mm Flat Washer
2D x14
4D x14

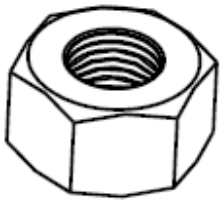

M8 Hex Nut x2
2D Only

M12 T-bolt x2
2D Only

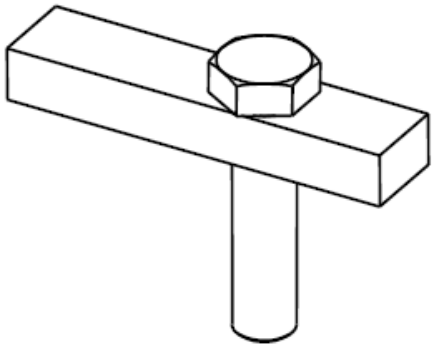

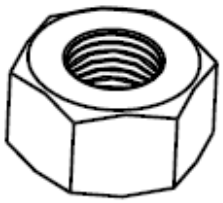

M12 Hex Nut x2
2D Only

trailfortress.com/rough-country-power-running-boards-psr61030

Product Packing List

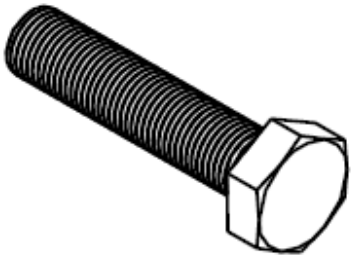

M8x35mm Hex Head Bolt
2D x4
4D x8

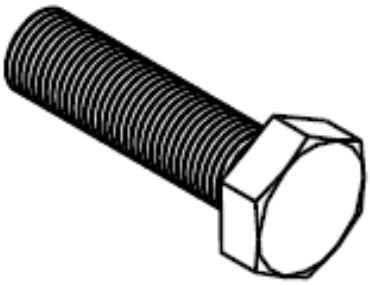

M8x25mm Hex Head Bolt
2D x8
4D x6



M6x25mm Socket Cap
Screw x8

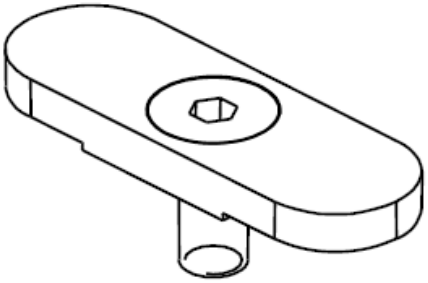

Short M8 T-bolt x1
2D Only

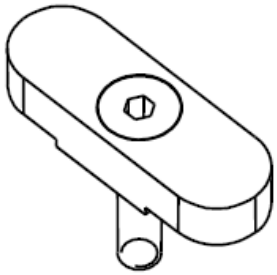

Long M8 T-bolt x1
2D Only

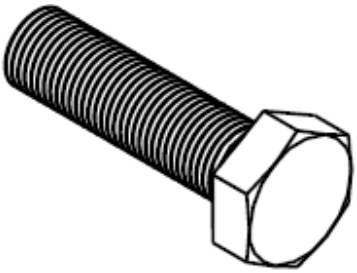

M12x35mm Hex Head Bolt x2



Wire Tie x25

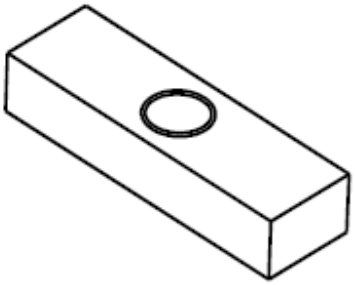

M12 Tension Block x2

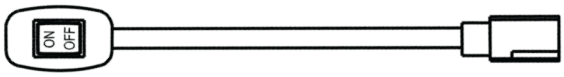

Power Board Switch

Fuse x2

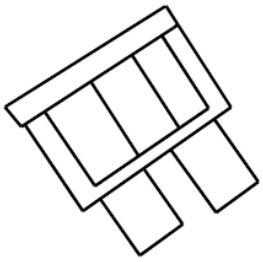

trailfortress.com/rough-country-power-running-boards-psr61030

Product Packing List

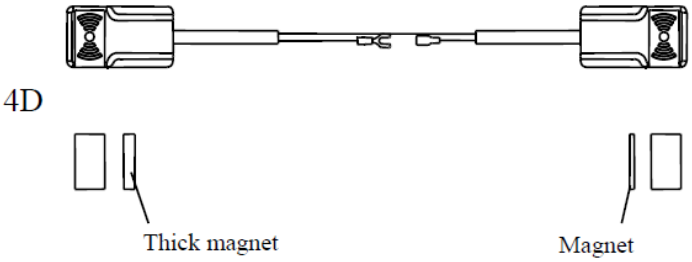

Body Mounted Module x2
Door Mounted Magnet
4D x2 Thick / x2 Normal
2D x2 Normal

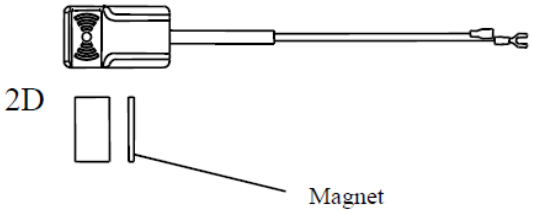

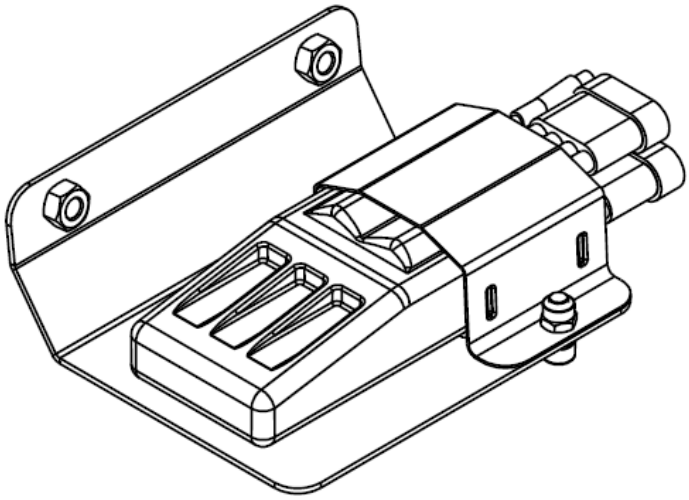

Controller Assembly x1

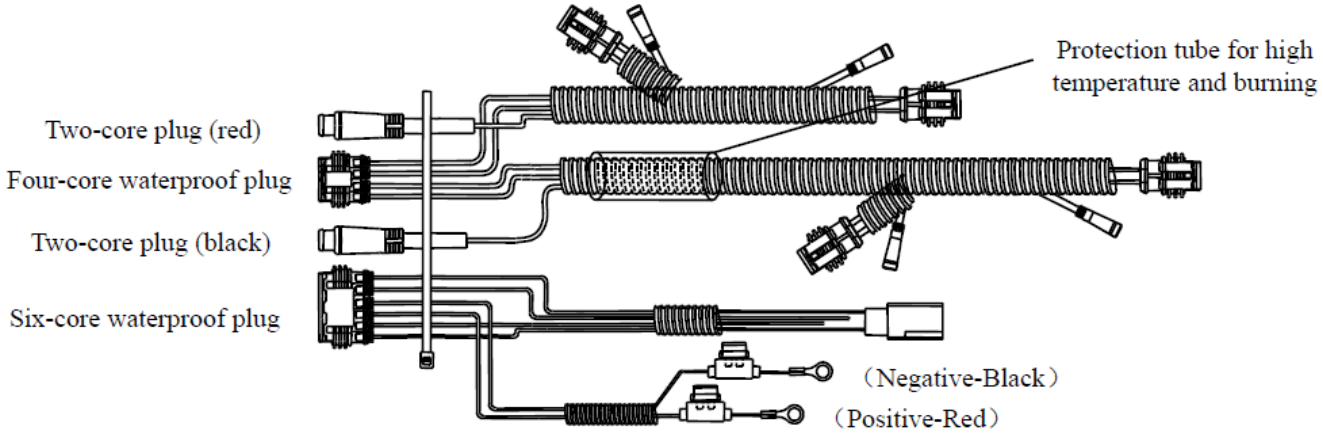

Wiring Harness x1

trailfortress.com/rough-country-power-running-boards-psr61030

Installation of the Passenger Side Motors and Controller Assembly

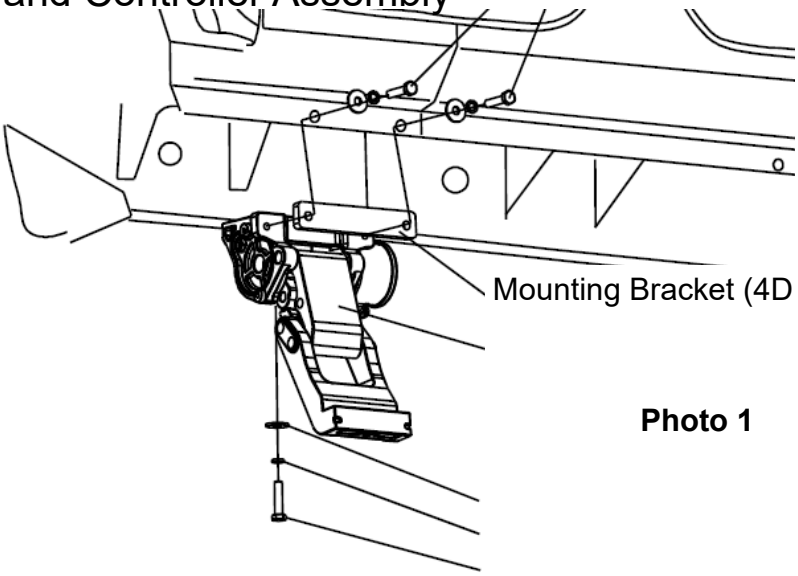

Photo 1

1. Install the passenger side rear motor using two (2) of the supplied M8x35mm hex head bolts, spring washers, and flat washers through the pinch weld of the vehicle with a 13mm wrench. Do not fully tighten at this time. **NOTE:** 4 door models will need to install the mounting bracket between the pinch weld and rear motor. Use a supplied M8x35mm hex head bolt, spring washer, and large diameter 8mm washer to secure the motor through the threaded hole in the vehicle body. Loosely tighten with a 13mm wrench. **See Photo 1.**
2. Install the front passenger motor with two (2) supplied M8x25mm hex head bolts, spring washers, and flat washers. Loosely tighten with a 13mm wrench. Use a supplied M8x35mm hex head bolt, spring washer, and large diameter 8mm washer to secure the motor through the threaded hole in the vehicle body. Loosely tighten with a 13mm wrench. **See Photo 2.**

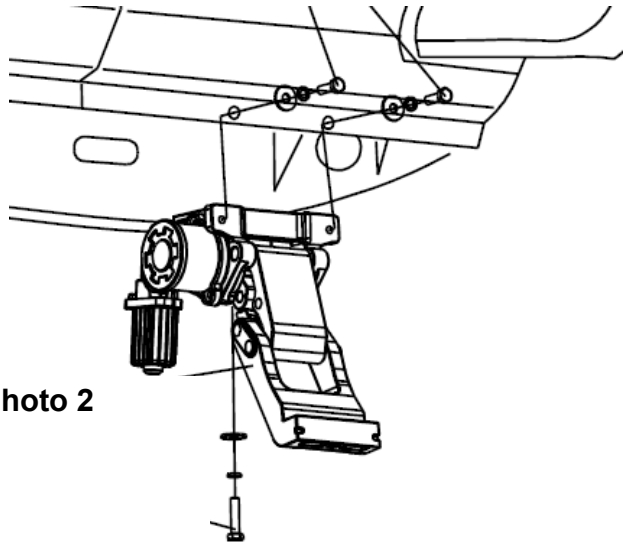

Photo 2

3. Repeat Step 1 and Step 2 for driver side of the vehicle.

trailfortress.com/rough-country-power-running-boards-psr61030

Installation of the Passenger Side Motors and Controller Assembly

4. **Four Door Model:** Insert the supplied M12 tension block into the slot of the vehicle body. **See Photo 3.**
5. **Four Door Model:** Take the passenger side (motor protective bracket right) and align it with corresponding slot and threaded hole in vehicle body. Use a supplied M12x35mm hex head bolt, spring washer and large diameter washer and loosely install with an 18mm wrench. **See Photo 4.**

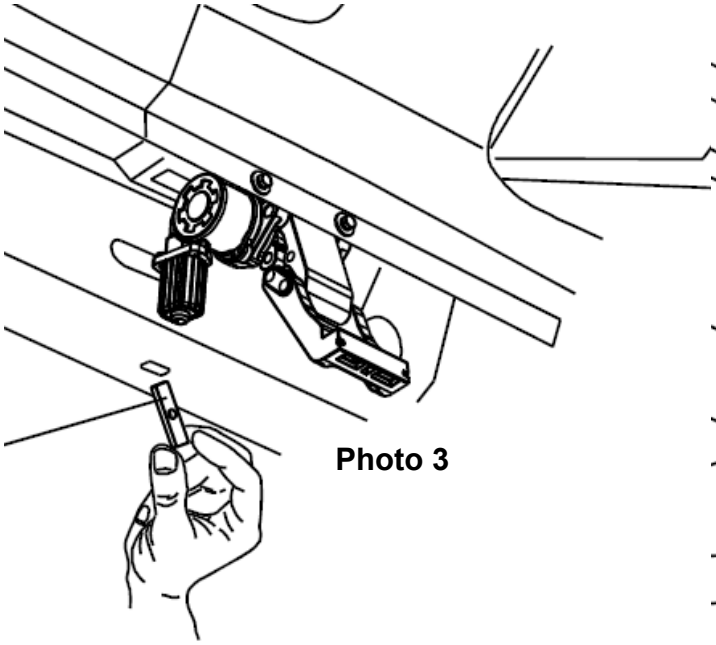

Photo 3

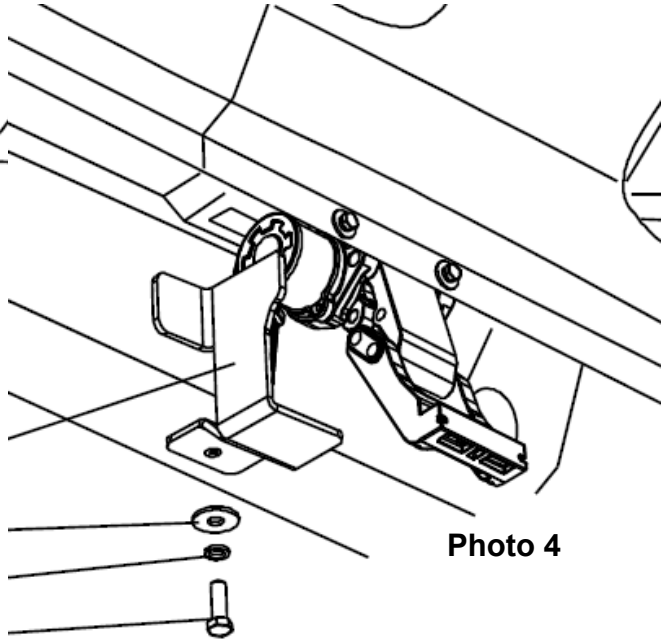

Photo 4

6. **Two Door Model:** Insert supplied M12 T-bolt and M12 lock through the slot in the vehicle frame. **See Photo 5. NOTE:** Picture does not show motor installed for ease of visualizing mounting location.
7. **Two Door Model:** Install M12 hex nut, spring washer, and large diameter washer. Loosely tighten with an 18mm wrench. **See Photo 6.**
8. Repeat Steps 4-7 for driver side.

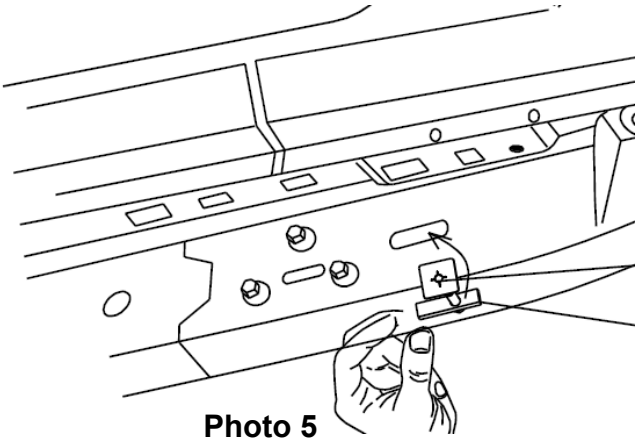

Photo 5

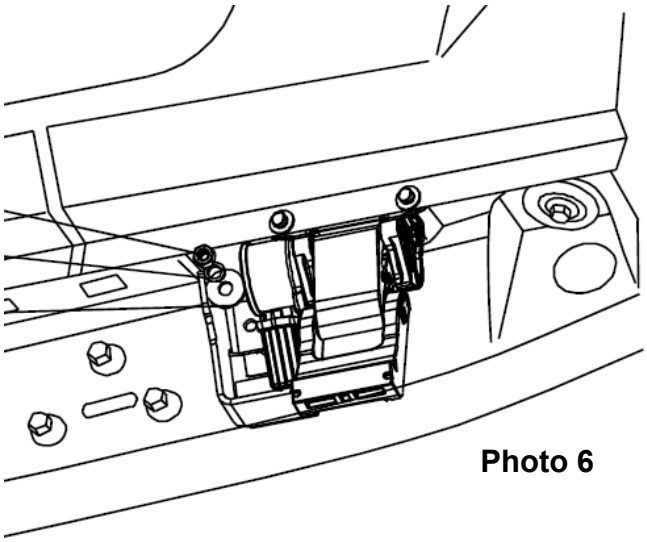

Photo 6

trailfortress.com/rough-country-power-running-boards-psr61030

Installation of the Passenger Side Controller Assembly

9. **Two Door Model:** Install the supplied short 8mm T-bolt and long 8mm T-bolt on passenger side. **See Photo 7.**
10. **Two Door Model:** Install the controller assembly with a supplied M8 hex nut, large diameter washer, and spring washer. Tighten with a 13mm wrench. **See Photo 8.**

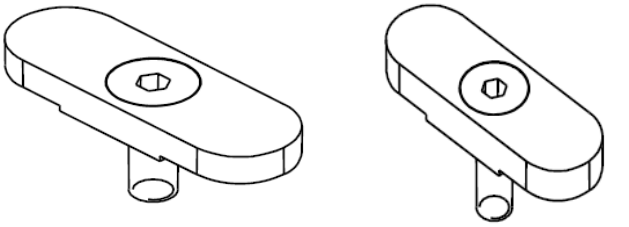

Short M8 T-bolt x1

Long M8 T-bolt x1

Long 8mm T-bolt **Short 8mm T-bolt**

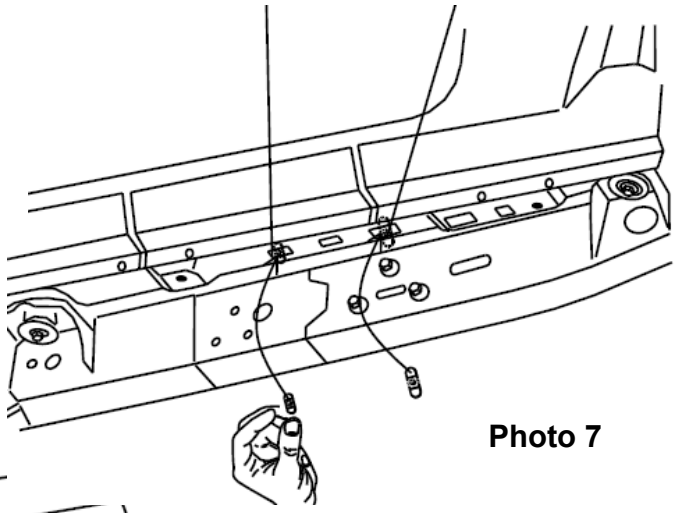

Photo 7

Photo 8

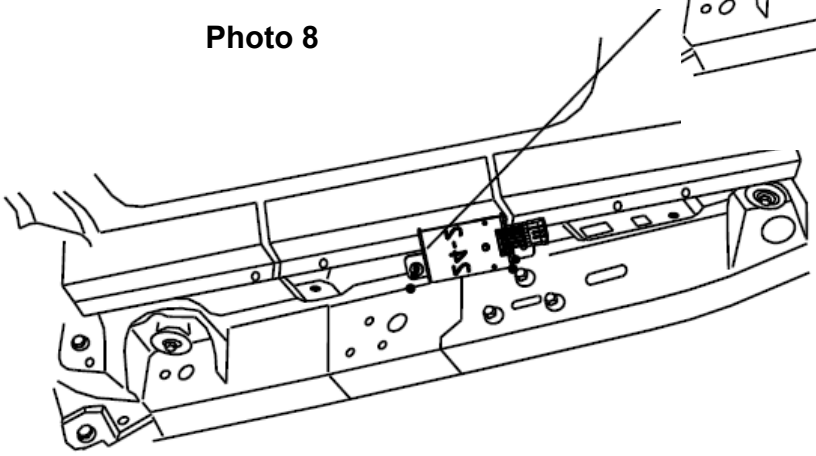

11. **Four Door Model:** Install the controller assembly with two supplied M8x25mm hex head bolts, spring washers, and flat washers into the mounting holes in the pinch weld on the passenger side. Tighten with a 13mm wrench. **See Photo 9.**

Photo 9

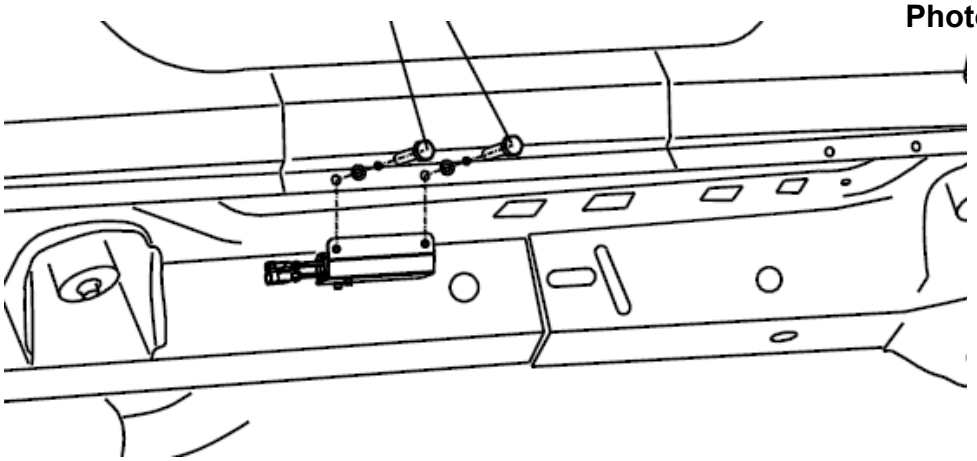

trailfortress.com/rough-country-power-running-boards-psr61030

12. Install board assembly on passenger side with four (4) M6x25mm socket cap screws (two for each motor). Tighten with a 5mm Allen wrench. When board assembly is in desired position, fully tighten the motor mounting bolts. **See Photo 10.**
13. Repeat for driver side.

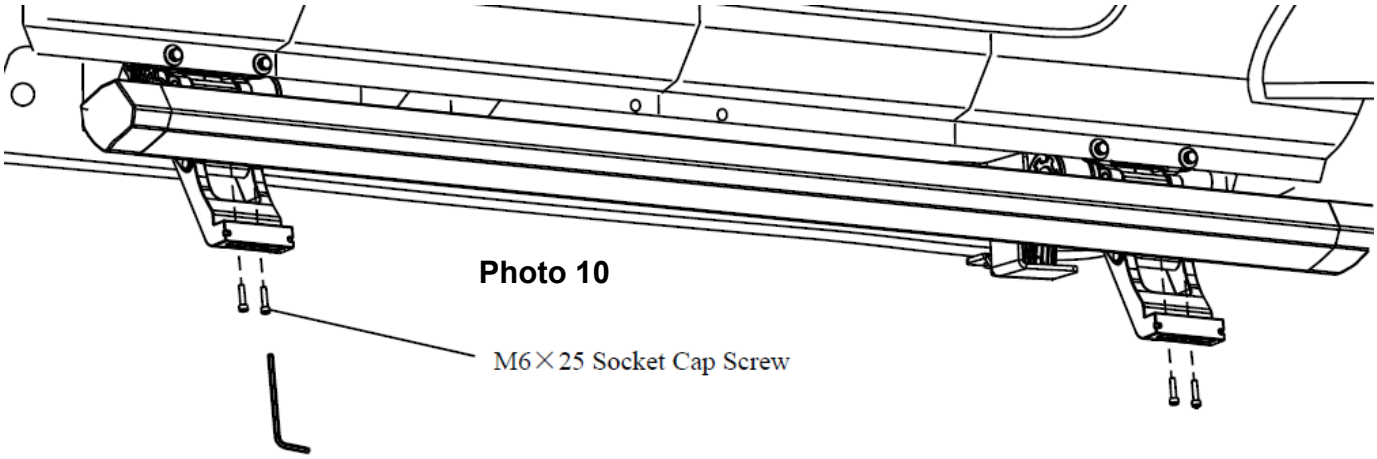

Photo 10

14. Remove the kick panel and the scuff plate on the passenger side of the vehicle.
15. Lift the carpet to expose the rubber grommet on the passenger side. Feed the brown signal wire, white signal wire, and On/Off switch wires through the rubber grommet. **See Photo 11.**

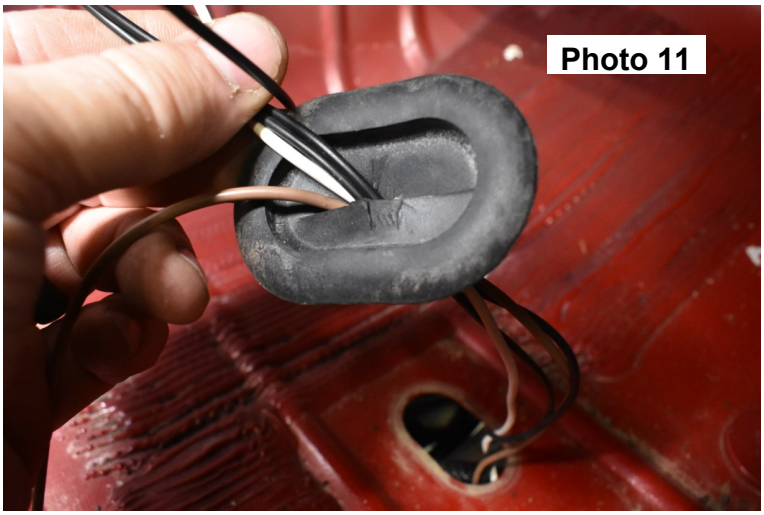

Photo 11

trailfortress.com/rough-country-power-running-boards-psr61030

Wiring Harness Installation

Photo 12

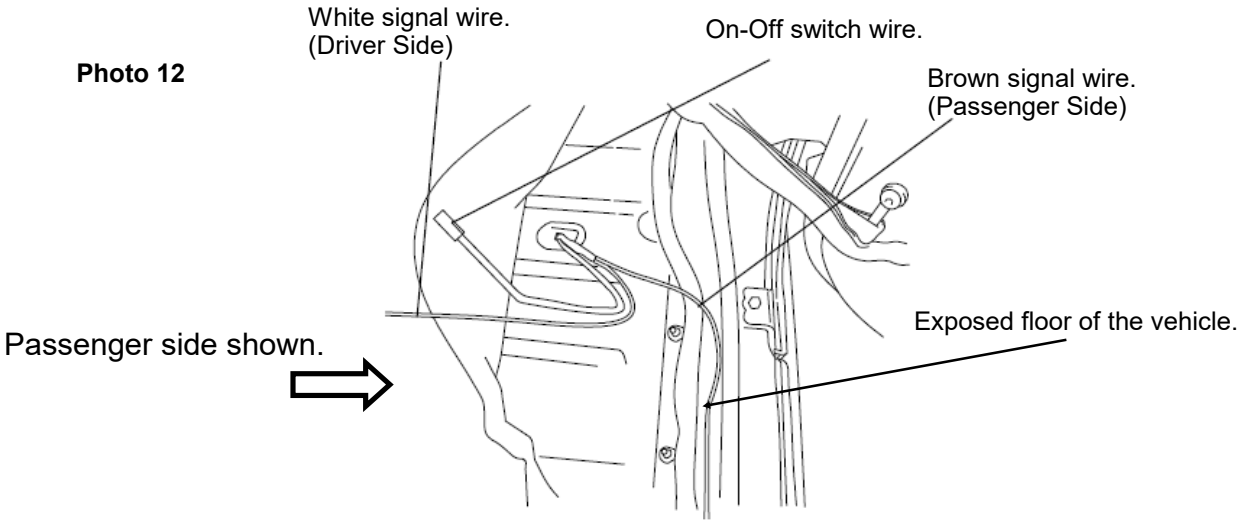

16. Install the supplied wiring harness' Brown, White and On-Off switch wire through the grommet in the drain plug under the floor of the vehicle to the inside of the cab. **See Photo 12.**

NOTE: Apply waterproof tape to the wiring harness and the drain plug once the wiring harness has been fully installed.

Photo 13

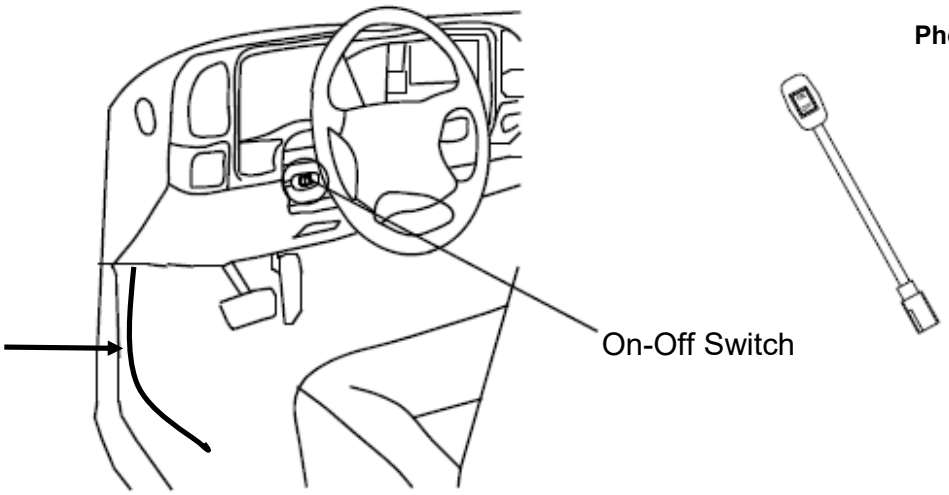

17. Mount the On-Off switch. Clean the area of installation and remove the covering on the double sided tape and apply it to the dash. Switch shown on the upper dash. **See Photo 13.**
18. Connect the On-Off switch to the wiring harness installed in the floor of the cab. Leave switch in the On position, this will keep the motors in the extended position as installed to the vehicle when power is connected. Secure the On-Off switch wiring harness behind the dash to the drain plug under the carpet.

NOTE: Normal function of the On-Off switch once power has been connected to the positive and negative fused links on the battery. (On) the steps will extend for use and entering the vehicle. Steps will retract when both doors per side are closed connecting the magnet to the module. (Off) the steps will retract to the body of the vehicle even when the doors are open and the magnet is away from the module.

trailfortress.com/rough-country-power-running-boards-psr61030

2D Module Installation

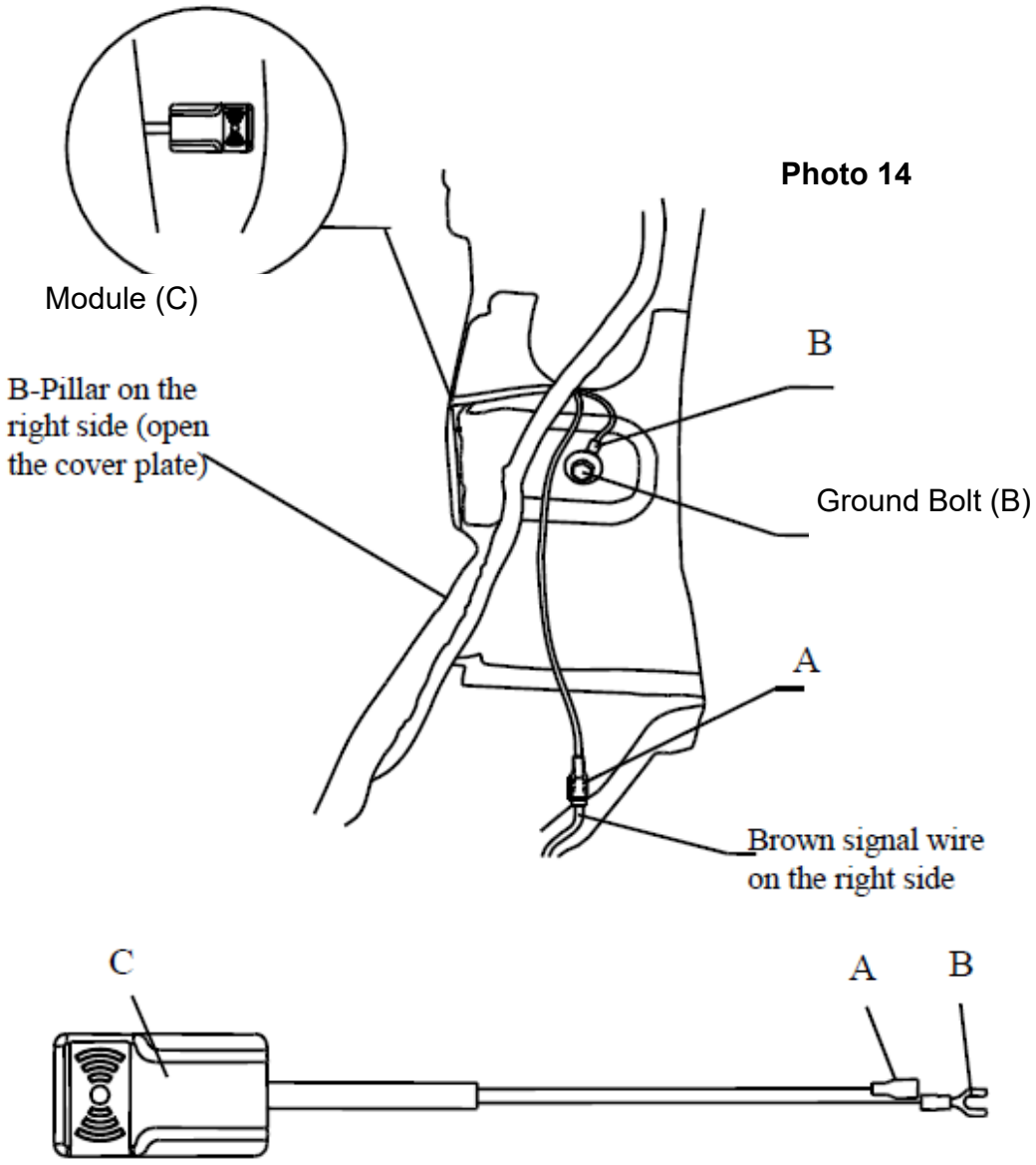

19. Remove the interior trim panel on the passenger side of the vehicle (*If interior trim is equipped with air bag, use caution*). Connect the brown signal wire from the wiring harness to terminal (A) on the module. Connect module wire (B) to the vehicle ground. Remove the double sided tape backing and place the front module (C) in a secure location to the inside of the door jamb. **See Photo 14.** Remove the cover off of the double sided tape and place the place the rear module (C) in a secure location to the inside of the door jamb.
20. Follow step 21 and install the driver side module using the white wire from the supplied wiring harness.

NOTE: The magnets will be installed in a later step after the power has been connected.

trailfortress.com/rough-country-power-running-boards-psr61030

4D Module Installation

Photo 15A

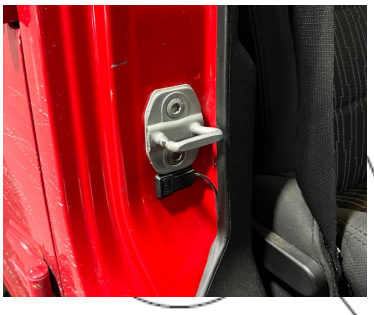

Front Passenger Door Module (C)

Photo 15B

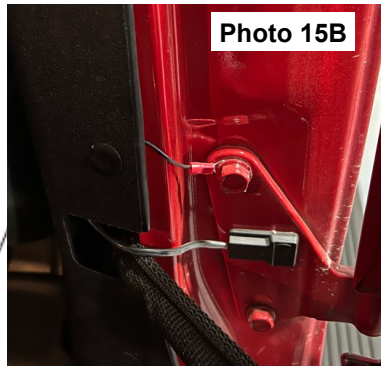

Rear Passenger Door Module (C)

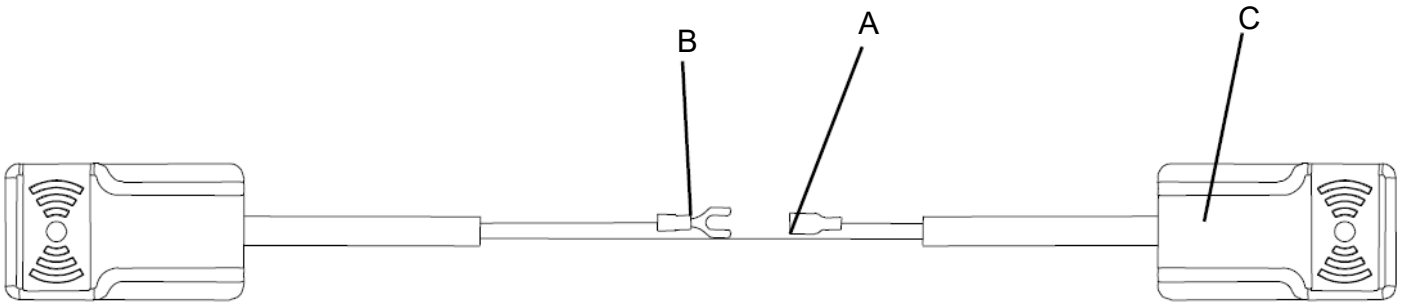

21. Remove the interior trim panel on the passenger side of the vehicle (*If interior trim is equipped with air bag, use caution*). Connect the brown signal wire from the wiring harness to terminal (A) on the module. Connect module wire (B) to the vehicle ground. Remove the double sided tape backing and place the front module (C) in a secure location to the inside of the door jamb. **See Photo 15A.** Remove the cover off of the double sided tape and place the place the rear module (C) in a secure location to the inside of the door jamb. **See Photo 15B.**
22. Follow step 14 and install the driver side module using the brown wire from the supplied wiring harness. *Photos 15A and 15B are shown from the passenger side of the vehicle*.

NOTE: The magnets will be installed in a later step after the power has been connected.

trailfortress.com/rough-country-power-running-boards-psr61030

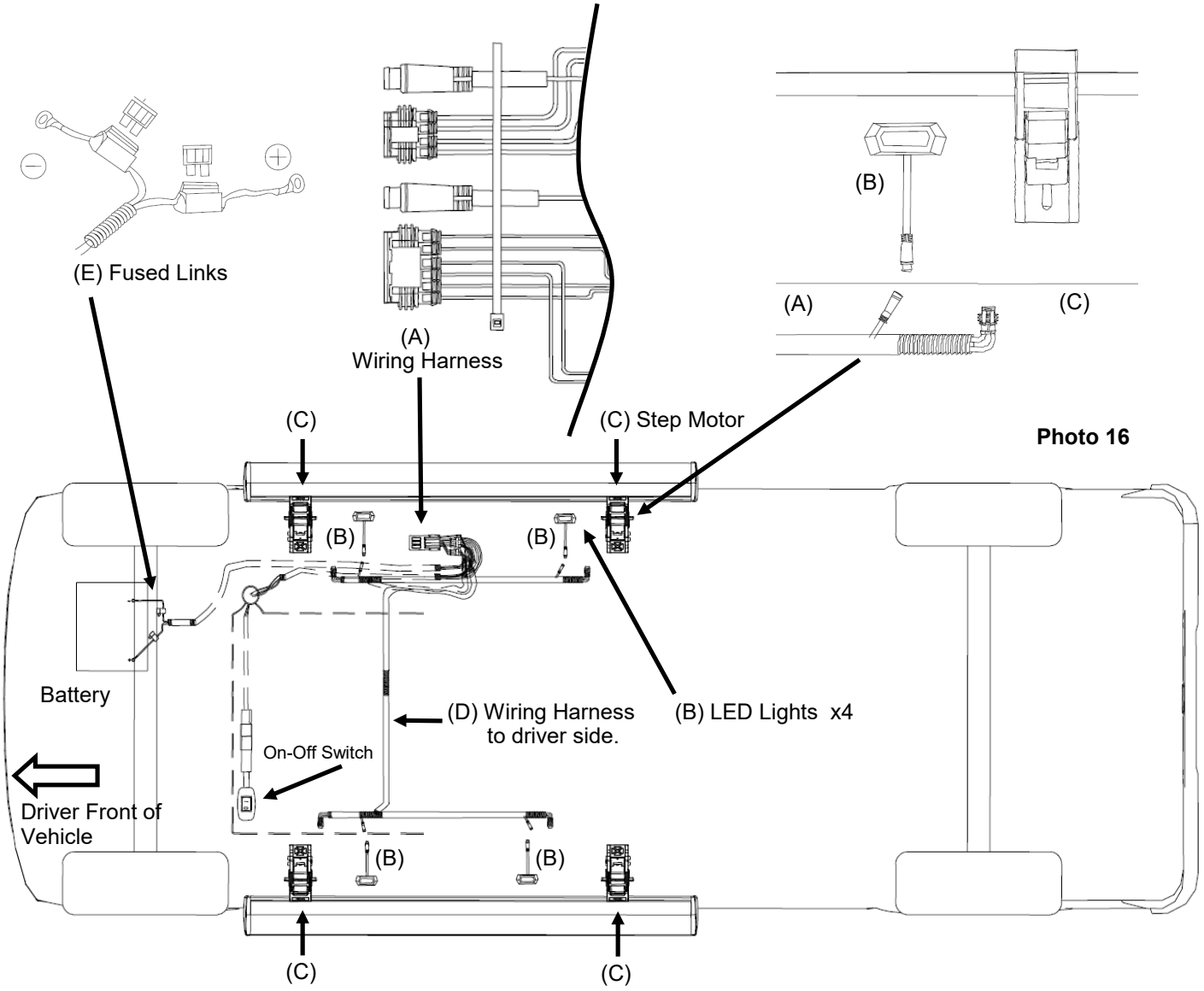

Photo 16

23. (A) Connect the 4 plugs of the wiring harness to the controller assembly mounted to the body of the vehicle on the passenger side. **See Photo 16.**
24. (B) Mount the (4) LED Lights. Clean the surface of the pinch weld under the center of each door on the driver and passenger side of the vehicle. Remove the double sided tape backing and apply to the pinch weld.
25. (A) Route the wiring harness along the frame of the passenger side.
26. (C) Connect the step motor labeled to the corresponding wiring harness (Driver Side) Front Left Motor and Rear Left Motor.
27. (B) Connect the LED light plugs on the driver side.
28. (D) Route the wiring harness across the frame to the driver side of the vehicle.
29. (C) Connect the step motor labeled to the corresponding wiring harness (Passengers Side) Front Right Motor and Rear Right Motor.
30. (B) Connect the LED light plugs on the passenger side.
31. (E) Route the fused link harness along the passenger side frame up to the battery box, secure the wiring harness with the supplied wire ties away from heat or moving parts. Connect the fused link's to the Positive and Negative side of the battery.

trailfortress.com/rough-country-power-running-boards-psr61030

Photo 17.

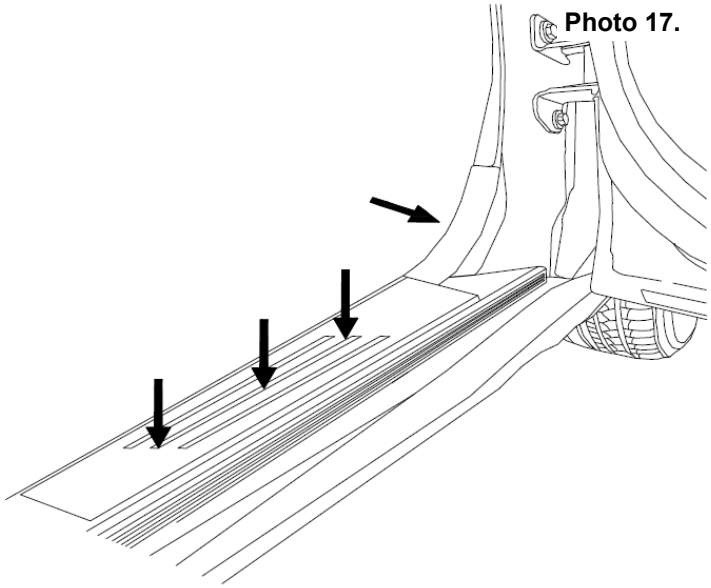

32. Adjust the carpet into place and re-install the B-pillar trim, kick panel and the scuff plate on the driver and passenger side of the vehicle. **See Photo 17.**
33. Using the (On-Off) switch cycle the steps (2-3 Times) leave them in the down position. The switch will be in the (On) position.
34. At this time, tighten the rear M8 motor bracket bolt's using a 13mm socket to 45ft/lbs and the front pinch weld mount M6 bolts using a 8mm socket to 23ft/lbs.
35. Tighten the step to the motor bracket using a 5mm Allen to 14ft/lbs.
36. Place the magnet on the vehicle door aligned with the module. (Shown on the passenger side) for aluminum door vehicles this can be done with painter's tape to test and ensure it will work correctly. **See Photos 18 and 19. NOTE:** 2D models only have two magnets. On 4D models, the thicker magnet goes on the rear door.
37. Ensure the On-Off switch is in the ON position. Now test the front and rear doors on the right and left side of the vehicle. If each one works correctly, the magnets are in line with the module. Mark the magnets position on each of the 4 doors, remove the covering from the double sided tape and stick the magnet to the door in the marked position.

NOTE: The On-Off switch will remain in the On position for normal use. We recommend the switch be in the Off position in icy or off roading conditions to prevent binding or damage to the step board, motor or motor bracket.



Photo 18

Magnet Placed on the passenger front door.

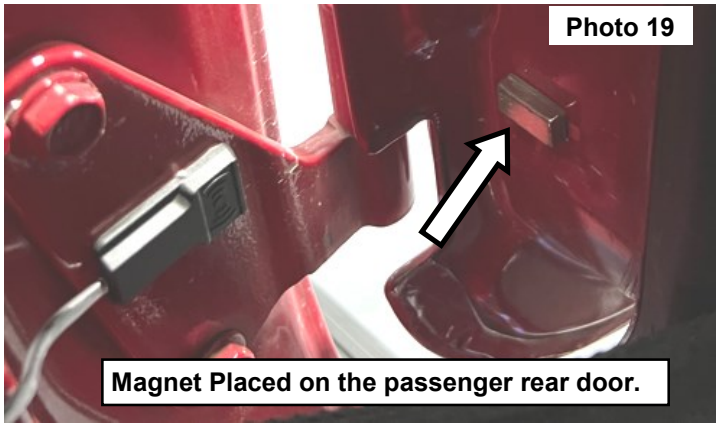

Photo 19

Magnet Placed on the passenger rear door.

trailfortress.com/rough-country-power-running-boards-psr61030

Troubleshooting Guide

Steps not working.

- On/Off Switch in On position
- Check for proper Power and Ground connections to battery
- Check Fuses in the Positive and Negative wires to the battery
- Check Ground connection on Pass and Driver side at B-Pillar
- Check all plugs and connections to ensure they are seated properly and making a good connection

Steps work with On/Off Switch but not with doors opening and closing.

- Check Module to Magnet alignment on doors
- Use a magnet to position over module

Steps drop when door is closed and retract when door is opened.

- Motors will operate in reverse polarity. Check the fused links on the battery for Positive and Negative connection

Torque Specs:

Size	Grade 5	Grade 8	Size	Class 8.8	Class 10.9
5/16”	15 ft/lbs	20ft/lbs	6MM	5ft/lbs	9ft/lbs
3/8”	30 ft/lbs	35ft/lbs	8MM	18ft/lbs	23ft/lbs
7/16”	45 ft/lbs	60ft/lbs	10MM	32ft/lbs	45ft/lbs
1/2”	65 ft/lbs	90ft/lbs	12MM	55ft/lbs	75ft/lbs
9/16”	95 ft/lbs	130ft/lbs	14MM	85ft/lbs	120ft/lbs
5/8”	135ft/lbs	175ft/lbs	16MM	130ft/lbs	165ft/lbs
3/4”	185ft/lbs	280ft/lbs	18MM	170ft/lbs	240ft/lbs

By purchasing any item sold by Rough Country, LLC, the buyer expressly warrants that he/she is in compliance with all applicable, State, and Local laws and regulations regarding the purchase, ownership, and use of the item. It shall be the buyers responsibility to comply with all Federal, State and Local laws governing the sales of any items listed, illustrated or sold. The buyer expressly agrees to indemnify and hold harmless Rough Country, LLC for all claims resulting directly or indirectly from the purchase, ownership, or use of the items.

trailfortress.com/rough-country-power-running-boards-psr61030