TRAIL FORTRESS

BUILT FOR THE TRAIL. CHECKED FOR YOUR TRUCK.

Rough Country PSR51518 Installation Instructions

Power Running Boards for 2014–2019 Silverado & Sierra Crew Cab

Part number: PSR51518

trailfortress.com/power-running-boards-silverado-sierra-crew-cab-rough-country-psr51518

Scan for fitment, price and install help

CHEVY/GMC 2007-18 1500/2500/3500

Thank you for choosing Rough Country for all your vehicle needs.

Please read instructions before beginning installation. Check the kit hardware against the kit contents shown below. Be sure you have all needed parts and know where they go.
If questions exist, please call us @1-800-222-7023. We will be happy to answer any questions concerning this product.
Check all fasteners for proper torque. Check to ensure for adequate clearance between all components.
Periodically check all hardware for tightness.

KIT CONTENTS:
Front Motor Left x1
Rear Motor Left x1
Rear Motor Right x1
Front Motor Right x1
Power Board Switch x1
Controller Assembly x1
Wiring Harness x1
Step Boards x2
LED Lights x4

Wired Magnetic Sensors
Module x2
Magnet x4

TOOLS NEEDED:
5mm Allen
12mm Wrench
12mm Socket
Ratchet
Wire Cutter

HARDWARE INCLUDED:
M8 x30 Hex Flange Bolt x8
M8 x25 Hex Flange Bolt x2
M6 x25 Socket Cap Screw x8
Wire Ties x25
Fuse x2







Product Packing List

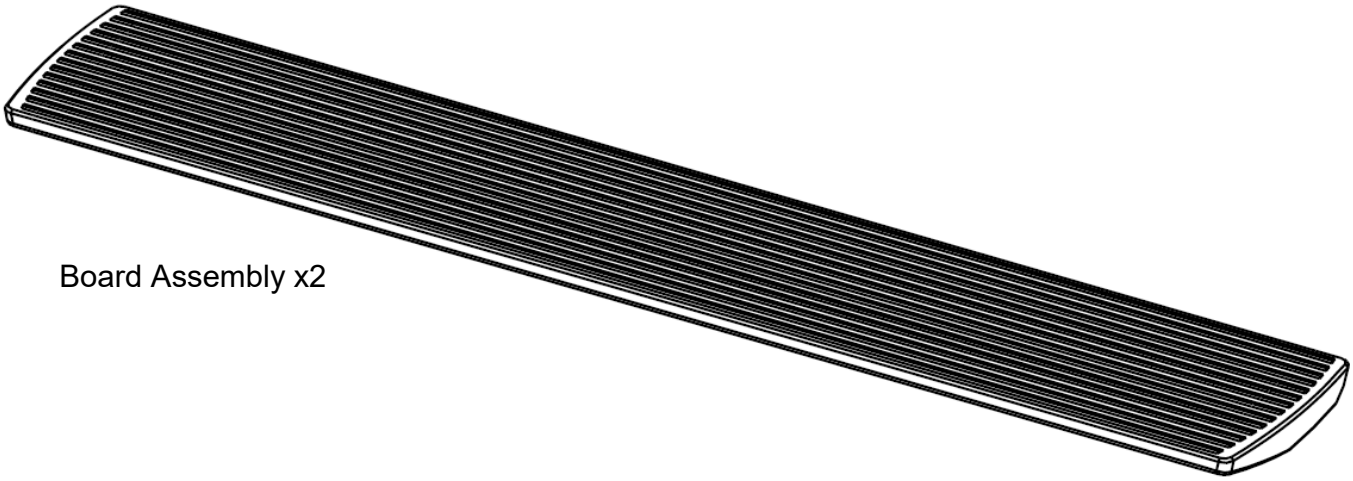

Board Assembly x2

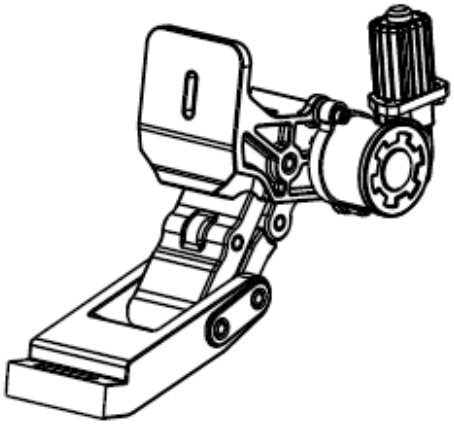

Front Left Motor x1
Driver Side

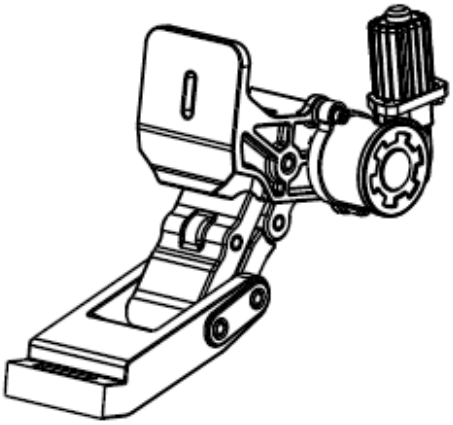

Rear Left Motor x1
Driver Side

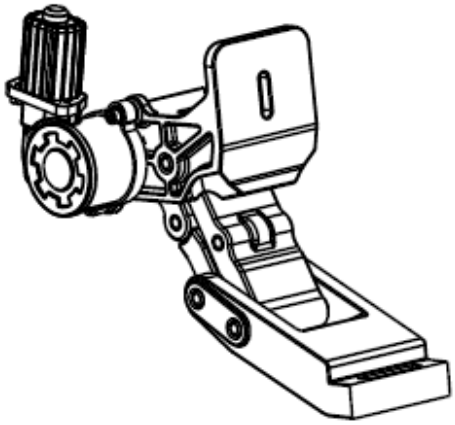

Rear Right Motor x1
Passenger Side

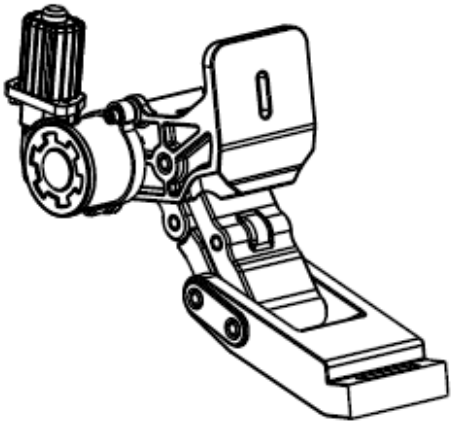

Front Right Motor x1
Passenger Side

trailfortress.com/power-running-boards-silverado-sierra-crew-cab-rough-country-psr51518

Product Packing List

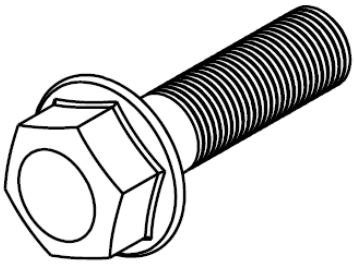

M8 x30 Hex Flange Bolt x8

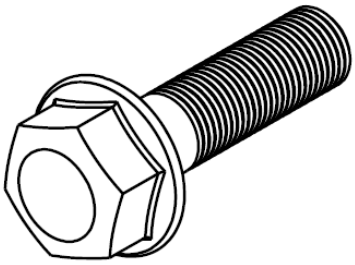

M8 x25 Hex Flange Bolt x2



M6 x25 Socket Cap Screw x8



Flush Head Rivet x4



Wire Tie x25

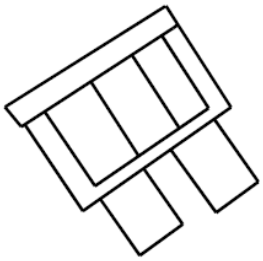

Fuse x2

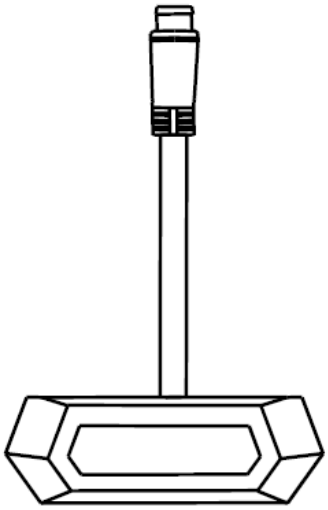

LED Lights x4

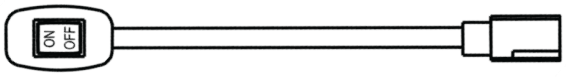

Power Board Switch x1

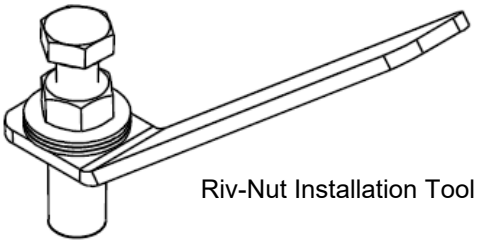

Riv-Nut Installation Tool x1



M8 Hex Head Flange Nut x1

trailfortress.com/power-running-boards-silverado-sierra-crew-cab-rough-country-psr51518

Product Packing List

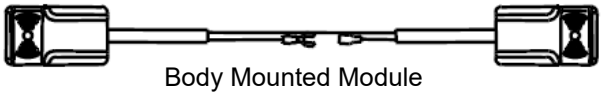

Body Mounted Module



Door Mounted Magnet

Body Mounted Module x2
Door Mounted Magnet x4

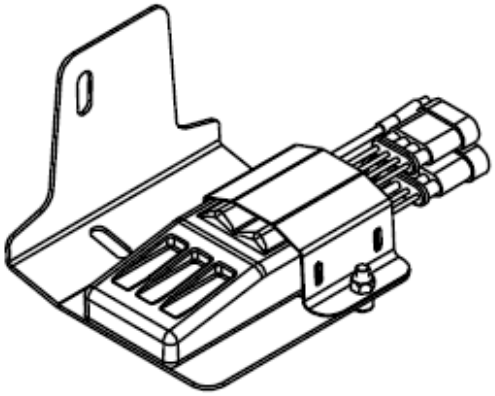

Controller Assembly x1

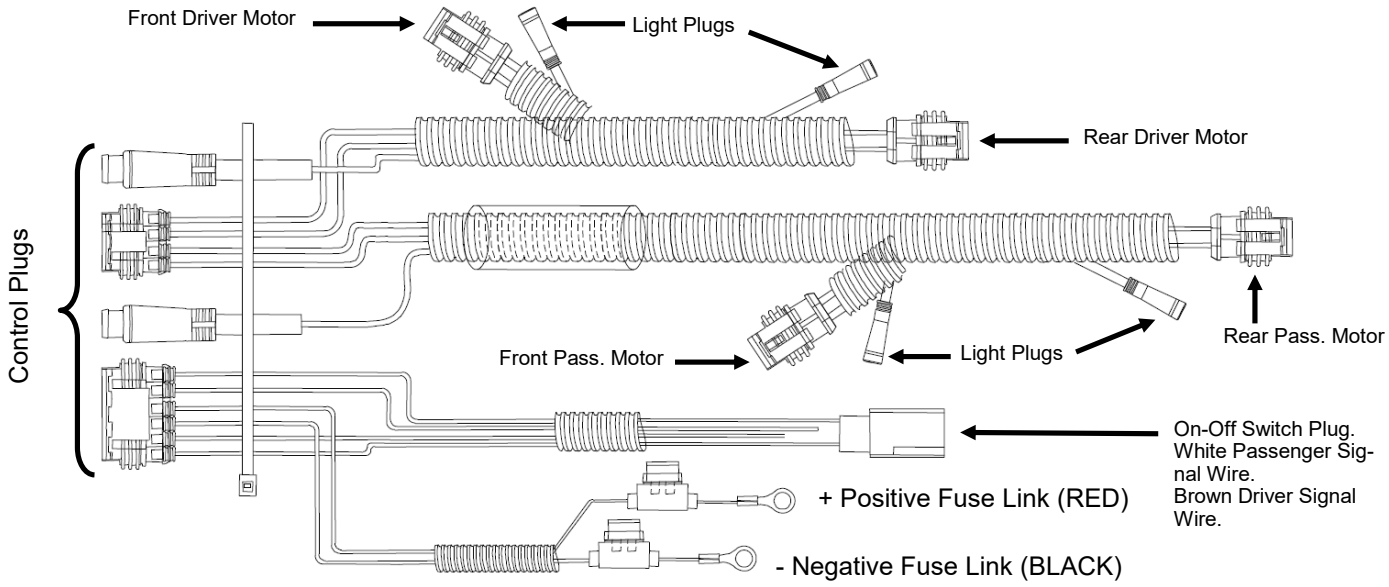

Wiring Harness x1

trailfortress.com/power-running-boards-silverado-sierra-crew-cab-rough-country-psr51518

Installation Position of the Driver Side Motors and Controller Assembly

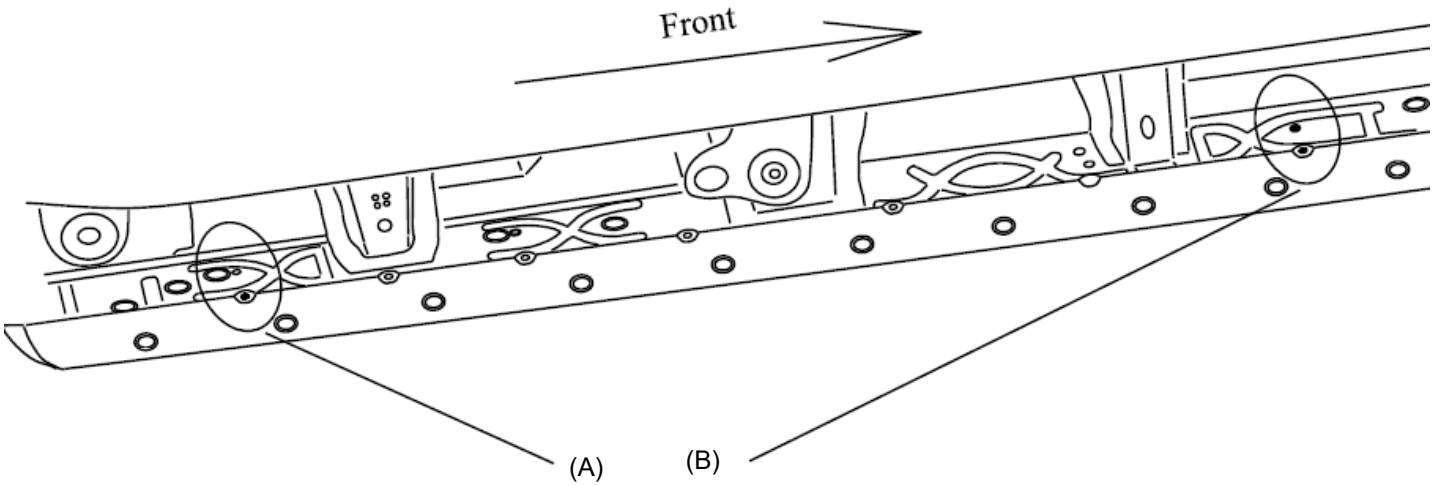

A. Installation Position for Rear Left Motor (Driver Side)

B. Installation Position for Front Left Motor (Driver Side)

Diagram shows the inner rocker panel on the driver side from beneath the vehicle.

trailfortress.com/power-running-boards-silverado-sierra-crew-cab-rough-country-psr51518

Driver Side Motor Installation

Photo 1

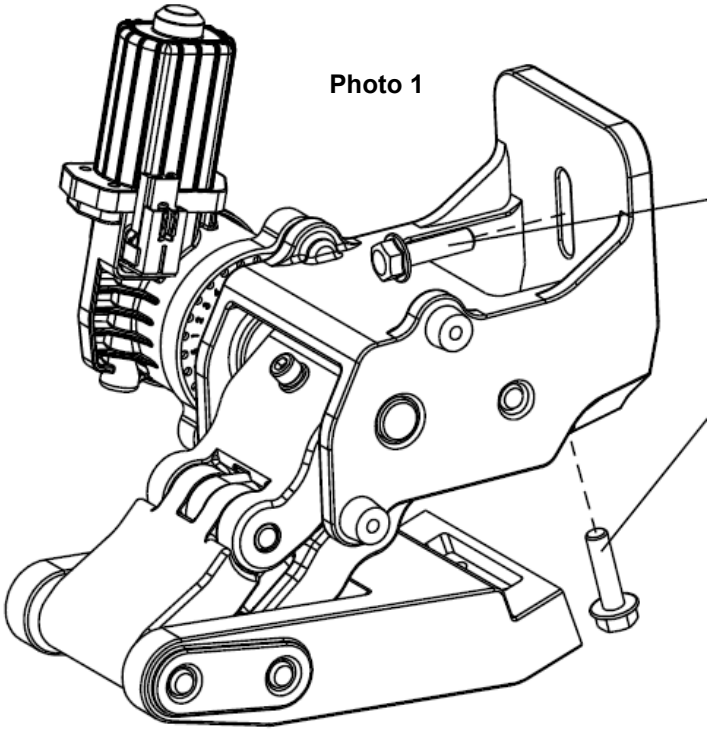

Photo 1A

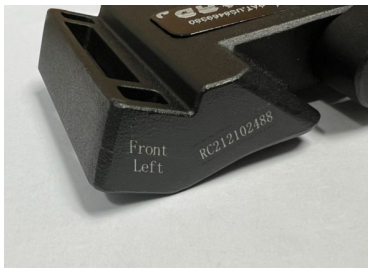

1. Align the two slotted holes in the motor bracket to the matching holes in the body of the vehicle. **See Photo 1. NOTE:** Bracket placements are found on the step board mount of the motor bracket **See Photo 1A**.

Photo 2

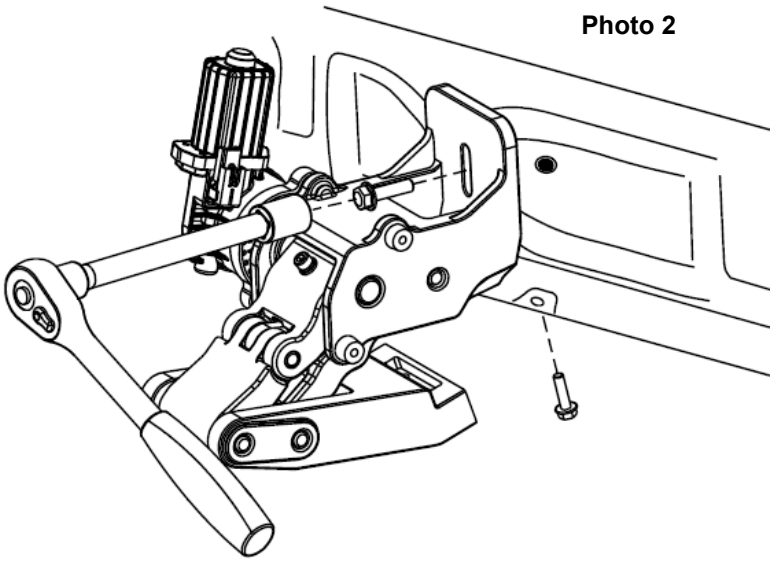

4. Secure the motor bracket to the body of the vehicle using (2) of the supplied M8 x30 hex flange bolts. **See Photo 2.**

NOTE: Do not tighten at this time, snug only using a 12mm socket.

trailfortress.com/power-running-boards-silverado-sierra-crew-cab-rough-country-psr51518

5. Install the driver rear motor to the body of the vehicle (reference the driver front installation steps). NOTE: Not all models have threaded holes for the rear motor. Refer to Rivet Nut installation instructions on the back page for more information.
6. Slide T-Nut into the track of the board assembly. **See Photo 5.** Align the T-Nut so the threaded holes match the slot of the motor brackets. **See Photo 5A.**





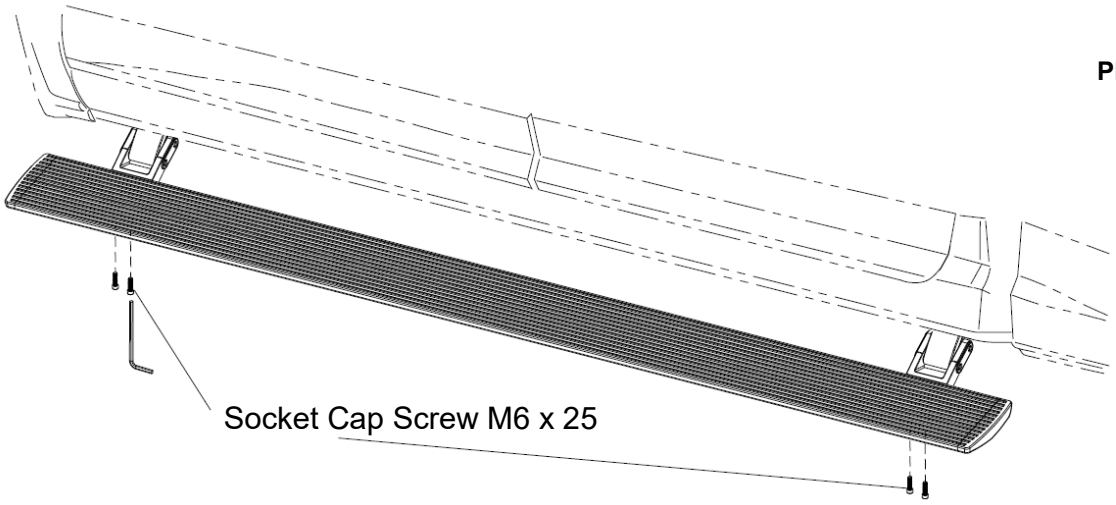

7. Install the step board onto the driver front and rear motor brackets. Secure the board using (2) M6 x 25 Socket Cap Screw bolts into each motor bracket.

NOTE: Center the step to the cab of the vehicle. Do not tighten at this time, snug only using a 5mm Allen. **See Photo 6.**

8. At this time, install the Passengers Side step motors and step board following the steps from 1-7.

trailfortress.com/power-running-boards-silverado-sierra-crew-cab-rough-country-psr51518

Installation of the controller

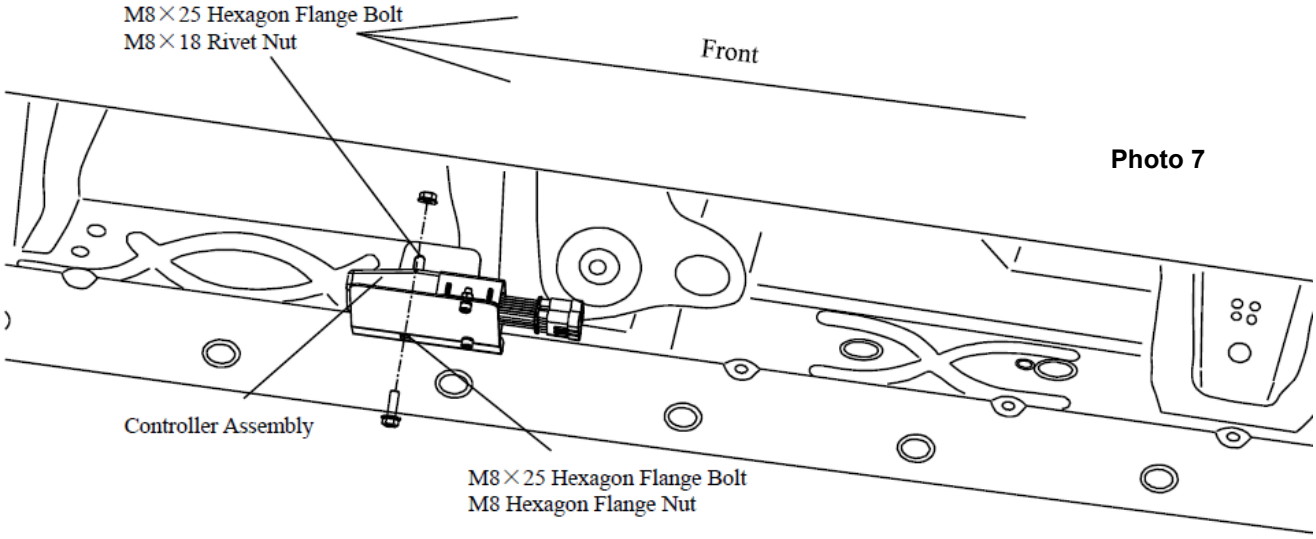

Photo 7

9. Install the controller bracket using an M8 x25 hex flange bolt and nut for the bottom hole. Install a rivet nut and M8x25 hex flange bolt for the upper slot. Installation instructions for installing the rivet nut are on the back page. The controller bracket will go near the center of the truck on the passenger side. Tighten the bracket using a 12mm socket. **See Photo 7.**



Photo 8

10. Remove the kick panel and the scuff plate on the passenger side of the vehicle.
11. Lift the carpet to expose the plastic grommet on the passenger side. In the center of the grommet, drill a hole using a 7/16” drill. Feed the wiring harness and On/Off switch through the hole. **See Photo 8.**

trailfortress.com/power-running-boards-silverado-sierra-crew-cab-rough-country-psr51518

Wiring Harness Installation

Photo 10

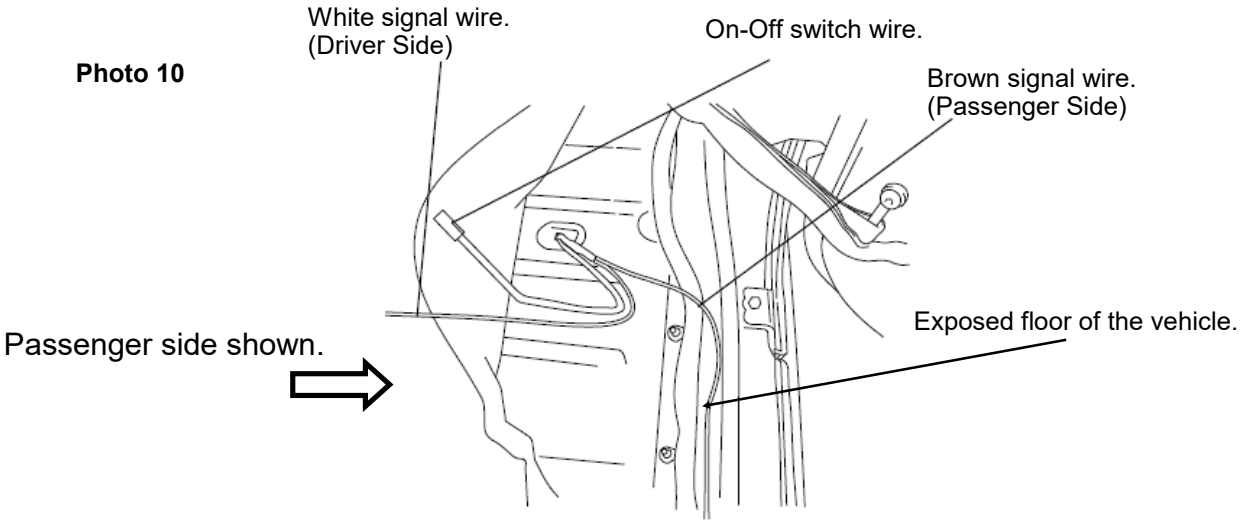

12. Install the supplied wiring harness' Brown, White and On-Off switch wire through the hole drilled in the drain plug under the floor of the vehicle to the inside of the cab. **See Photo 10.**

NOTE: Apply waterproof tape to the wiring harness and the drain plug once the wiring harness has been fully installed.

Photo 11

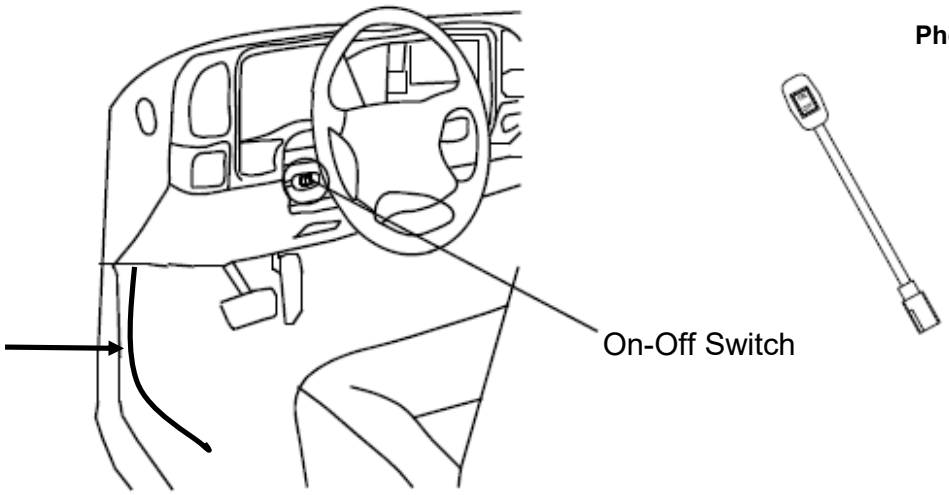

13. Mount the On-Off switch. Clean the area of installation and remove the covering on the double sided tape and apply it to the dash. Switch shown on the upper dash. **See Photo 11.**
14. Connect the On-Off switch to the wiring harness installed in the floor of the cab. Leave switch in the On position, this will keep the motors in the extended position as installed to the vehicle when power is connected. Secure the On-Off switch wiring harness behind the dash to the drain plug under the carpet.

NOTE: Normal function of the On-Off switch once power has been connected to the positive and negative fused links on the battery. (On) the steps will extend for use and entering the vehicle. Steps will retract when both doors per side are closed connecting the magnet to the module. (Off) the steps will retract to the body of the vehicle even when the doors are open and the magnet is away from the module.

trailfortress.com/power-running-boards-silverado-sierra-crew-cab-rough-country-psr51518

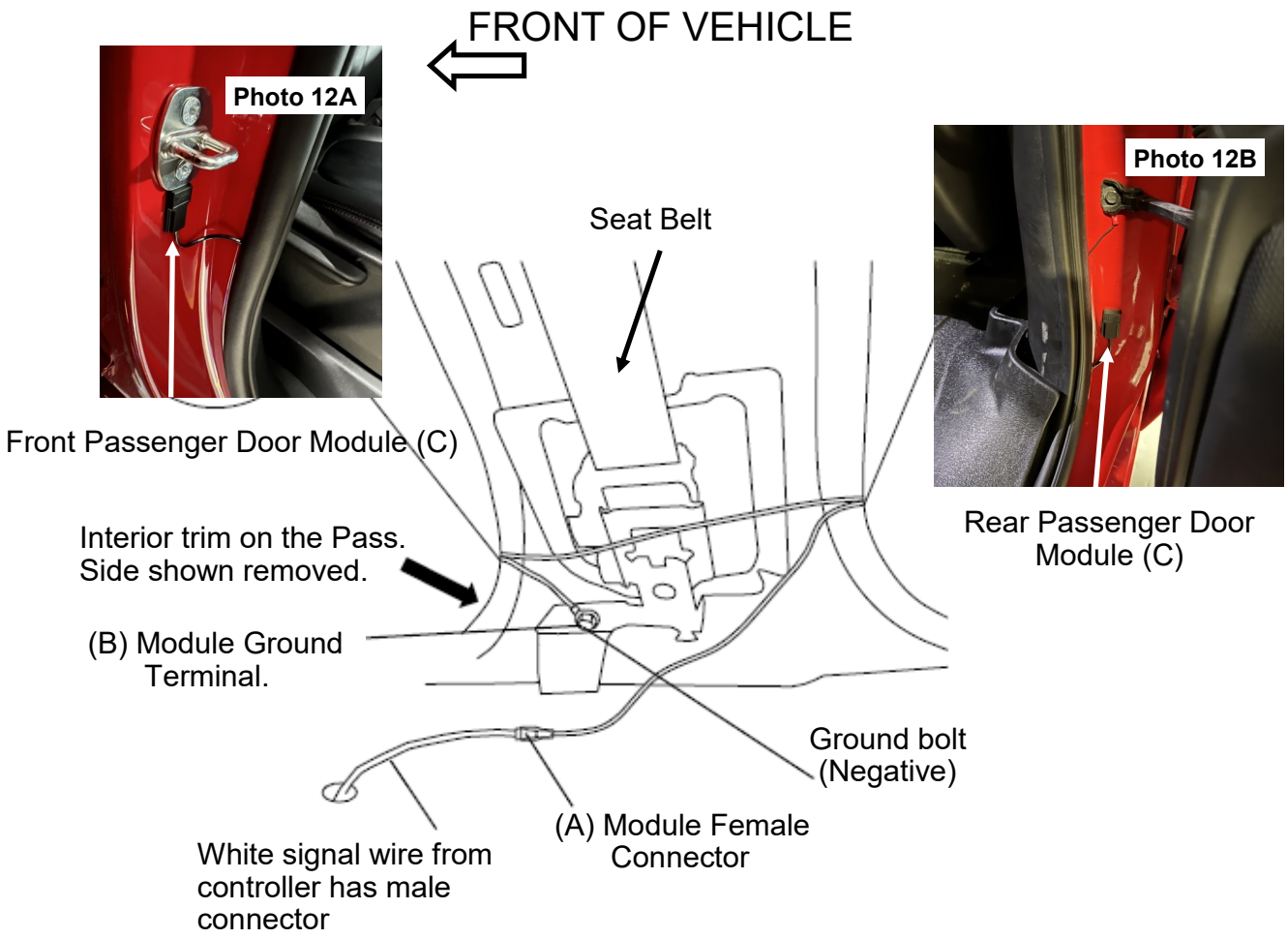

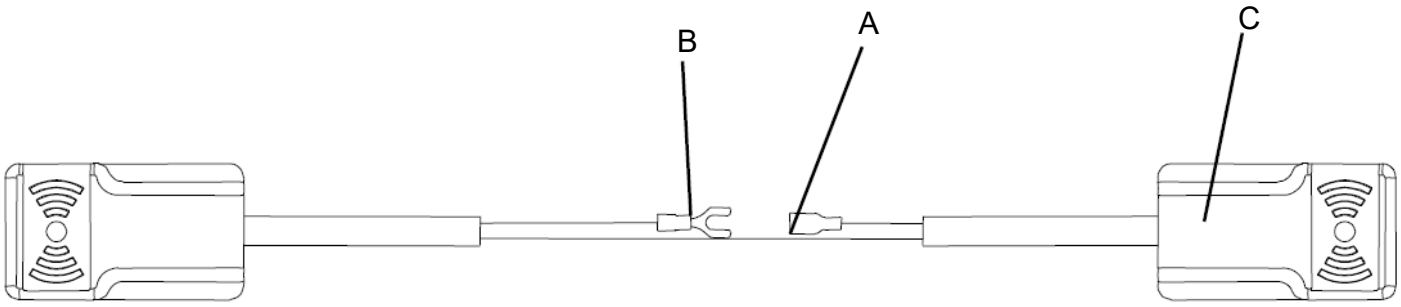

15. Remove the interior trim panel on the passenger side of the vehicle (*If interior trim is equipped with air bag, use caution*). Connect the White signal wire from the wiring harness to terminal (A) on the module. Connect module wire (B) to the vehicle ground. Remove the double sided tape backing and place the front module (C) in a secure location to the inside of the door jamb. **See Photo 12 A.** Remove the cover off of the double sided tape and place the place the rear module (C) in a secure location to the inside of the door jamb. **See Photo 12 B.**
16. Follow step 14 and install the driver side module using the brown wire from the supplied wiring harness. *Photos 12A and 12B are shown from the passenger side of the vehicle*.

NOTE: The magnets will be installed in a later step after the power has been connected.

trailfortress.com/power-running-boards-silverado-sierra-crew-cab-rough-country-psr51518

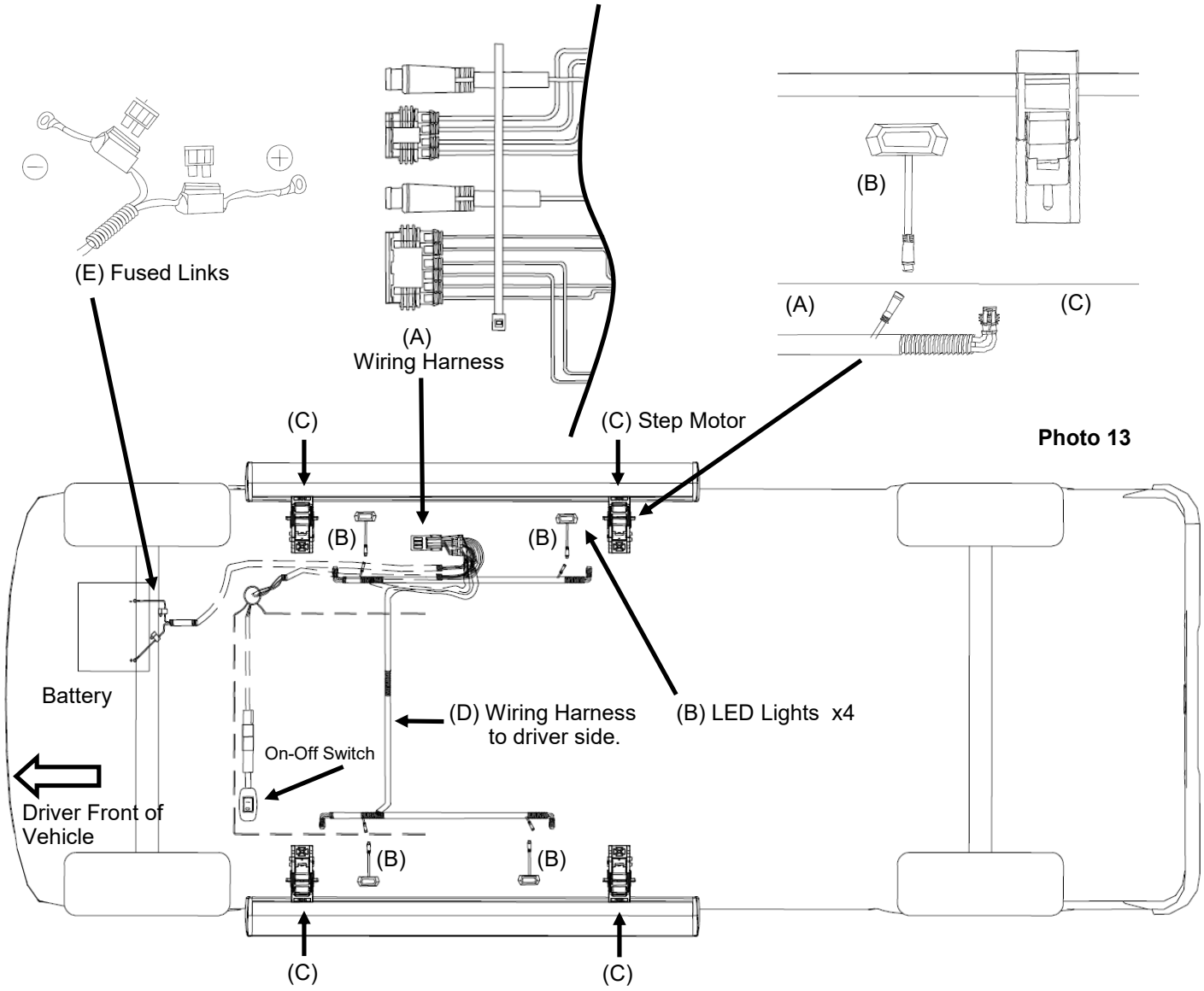

17. (A) Connect the 4 plugs of the wiring harness to the controller assembly mounted to the body of the vehicle on the passenger side. **See Photo 13.**
18. (B) Mount the (4) LED Lights. Clean the surface of the pinch weld under the center of each door on the driver and passenger side of the vehicle. Remove the double sided tape backing and apply to the pinch weld.
19. (A) Route the wiring harness along the frame of the passenger side.
20. (C) Connect the step motor labeled to the corresponding wiring harness (Driver Side) Front Left Motor and Rear Left Motor.
21. (B) Connect the LED light plugs on the driver side.
22. (D) Route the wiring harness across the frame to the passenger side of the vehicle.
23. (C) Connect the step motor labeled to the corresponding wiring harness (Passengers Side) Front Right Motor and Rear Right Motor.
24. (B) Connect the LED light plugs on the passenger side.
25. (E) Route the fused link harness along the driver side frame up to the battery box, secure the wiring harness with the supplied wire ties away from heat or moving parts. Connect the fused link's to the Positive and Negative side of the battery.

trailfortress.com/power-running-boards-silverado-sierra-crew-cab-rough-country-psr51518

Photo 14.

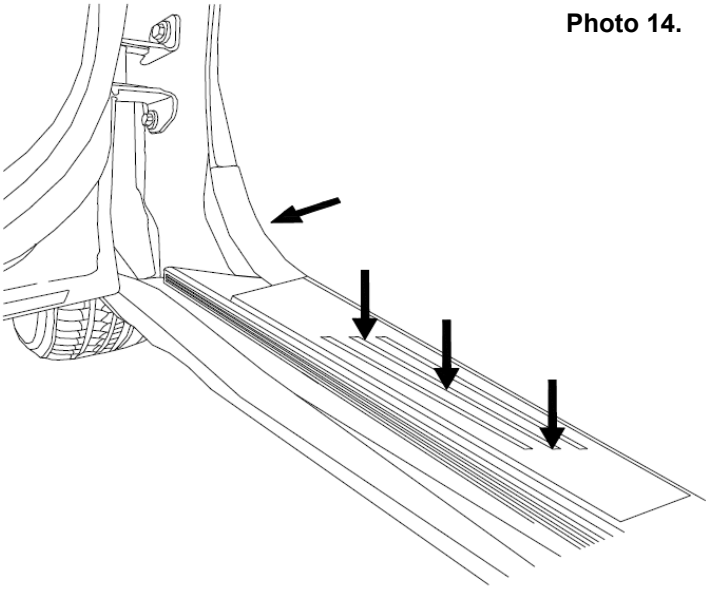

26. Adjust the carpet into place and re-install the B-pillar trim, kick panel and the scuff plate on the driver and passenger side of the vehicle. **See Photo 14.**
27. Using the (On-Off) switch cycle the steps (2-3 Times) leave them in the down position. The switch will be in the (On) position.
28. At this time, tighten the rear M8 x30 motor bracket bolt's using a 12mm socket to 45ft/lbs. and the front pinch weld mount M6 x20 bolts using a 8mm socket to 23ft/lbs.
39. Tighten the step to the motor bracket using a 5mm Allen to 14ft/lbs.

30 Place the magnet on the vehicle door aligned with the module. (Shown on the passenger side) for aluminum door vehicles this can be done with painter's tape to test and ensure it will work correctly. **See Photos 15 and 16.**
31. Ensure the On-Off switch is in the ON position. Now test the front and rear doors on the right and left side of the vehicle. If each one works correctly, the magnets are in line with the module. Mark the magnets position on each of the 4 doors, remove the covering from the double sided tape and stick the magnet to the door in the marked position.

NOTE: The On-Off switch will remain in the On position for normal use. We recommend the switch be in the Off position in icy or off roading conditions to prevent binding or damage to the step board, motor or motor bracket.

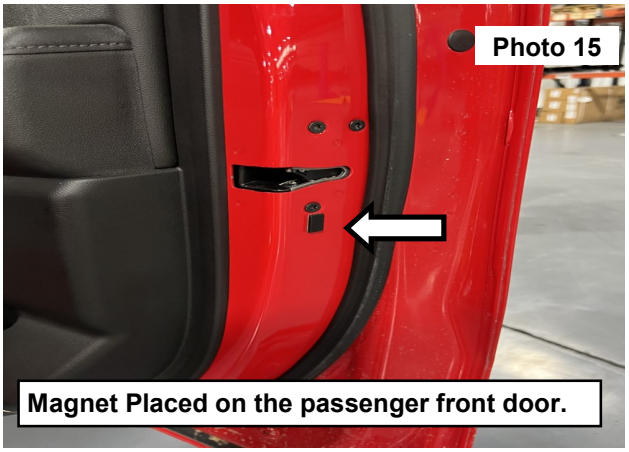

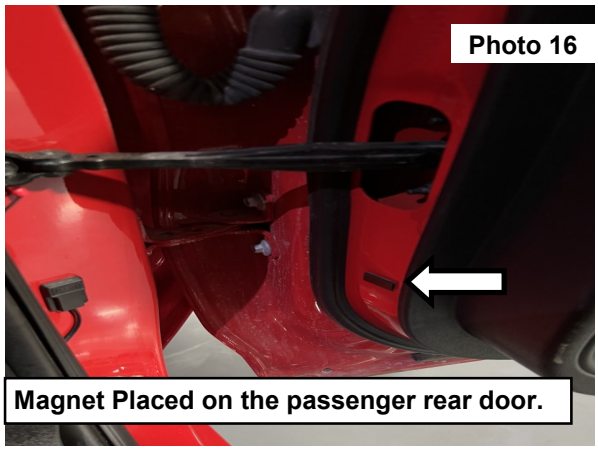

trailfortress.com/power-running-boards-silverado-sierra-crew-cab-rough-country-psr51518

Rivet Nut Installation

Place the rivet nut into the smooth hole. Align the threaded portion of the installation tool with the rivet nut. Place a 12mm wrench on the bottom hex nut. Use another 12mm wrench to hold the bolt still. Turn the bottom wrench until the rivet nut is locked in place, then remove the tool.

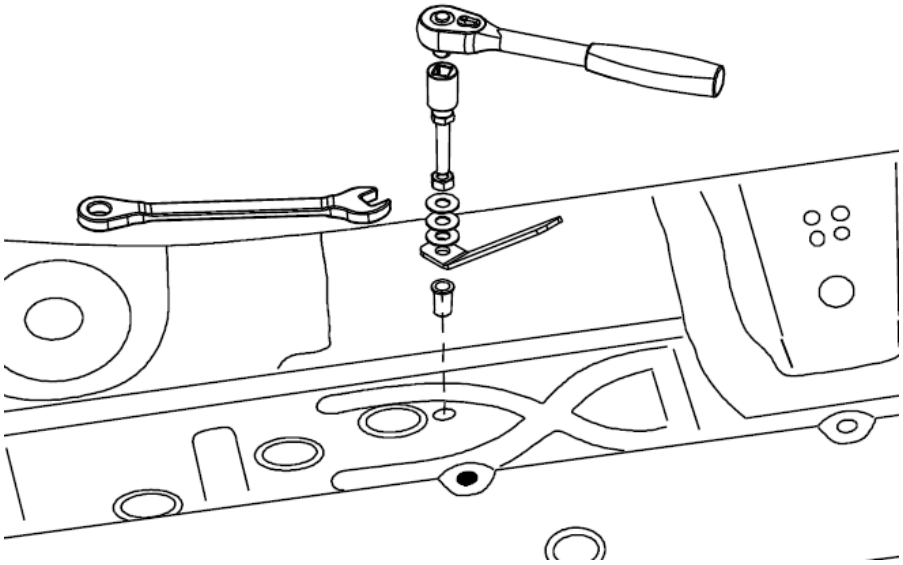

Troubleshooting Guide

Steps not working.

- On/Off Switch in On position
- Check for proper Power and Ground connections to battery
- Check Fuses in the Positive and Negative wires to the battery
- Check Ground connection on Pass and Driver side at B-Pillar
- Check all plugs and connections to ensure they are seated properly and making a good connection

Steps work with On/Off Switch but not with doors opening and closing.

- Check Module to Magnet alignment on doors
- Use a magnet to position over module

Steps drop when door is closed and retract when door is opened.

- Motors will operate in reverse polarity. Check the fused links on the battery for Positive and Negative connection

Torque Specs:

Size	Grade 5	Grade 8	Size	Class 8.8	Class 10.9
5/16”	15 ft/lbs	20ft/lbs	6MM	5ft/lbs	9ft/lbs
3/8”	30 ft/lbs	35ft/lbs	8MM	18ft/lbs	23ft/lbs
7/16”	45 ft/lbs	60ft/lbs	10MM	32ft/lbs	45ft/lbs
1/2”	65 ft/lbs	90ft/lbs	12MM	55ft/lbs	75ft/lbs
9/16”	95 ft/lbs	130ft/lbs	14MM	85ft/lbs	120ft/lbs
5/8”	135ft/lbs	175ft/lbs	16MM	130ft/lbs	165ft/lbs
3/4”	185ft/lbs	280ft/lbs	18MM	170ft/lbs	240ft/lbs

By purchasing any item sold by Rough Country, LLC, the buyer expressly warrants that he/she is in compliance with all applicable, State, and Local laws and regulations regarding the purchase, ownership, and use of the item. It shall be the buyers responsibility to comply with all Federal, State and Local laws governing the sales of any items listed, illustrated or sold. The buyer expressly agrees to indemnify and hold harmless Rough Country, LLC for all claims resulting directly or indirectly from the purchase, ownership, or use of the items.

trailfortress.com/power-running-boards-silverado-sierra-crew-cab-rough-country-psr51518