TRAIL FORTRESS

BUILT FOR THE TRAIL. CHECKED FOR YOUR TRUCK.

Rough Country PSR51330 Installation Instructions

Power Running Boards for 2021–2025 Ford Bronco 4-Door

Part number: PSR51330

trailfortress.com/power-running-boards-ford-bronco-4-door-rough-country-psr51330

Scan for fitment, price and install help

FORD 2020-23 BRONCO 2DR/4DR

Thank you for choosing Rough Country for all your vehicle needs.

Please read instructions before beginning installation. Check the kit hardware against the kit contents shown below. Be sure you have all needed parts and know where they go.
If questions exist, please call us @1-800-222-7023. We will be happy to answer any questions concerning this product.
Check all fasteners for proper torque. Check to ensure for adequate clearance between all components.
Periodically check all hardware for tightness.

KIT CONTENTS (2D):
Board Assembly x2
Front Motor Left x1
Front Motor Right x1
Rear Motor Left x1
Rear Motor Right x1
Controller Assembly x1
LED Lights x4
Power Board Switch x1
Wiring Harness

Wired Magnetic Sensors Module x2
Magnet x2

TOOLS NEEDED:
5mm Allen
13mm Wrench
17mm Wrench
Wire Cutter/Stripper
Weatherproof Tape

HARDWARE INCLUDED (2D):
M8x25mm Hex Head Bolt x2
M10x25mnm Hex Head Bolt x6
M10x35mm Hex Head Bolt x4
8mm Spring Washer x2
8mm Flat Washer x2
10mm Spring Washer x10
10mm Flat Washer x10
M6x25mm Socket Cap Screw x8
M8 Flange Nut x2
Lock Washer x2
U-Bolt x1
Fuse x2
Wire Tie x25



KIT CONTENTS (4D):
Board Assembly x2
Front Motor Left x1
Front Motor Right x1
Rear Motor Left x1
Rear Motor Right x1
Controller Assembly x1
LED Lights x4
Power Board Switch x1
Wiring Harness

Wired Magnetic Sensors Module x2
Magnet x4

HARDWARE INCLUDED (4D):
M8x25mm Hex Head Bolt x2
M10x25mnm Hex Head Bolt x8
M10x35mm Hex Head Bolt x4
8mm Spring Washer x2
8mm Flat Washer x2
10mm Spring Washer x12
10mm Flat Washer x12
M6x25mm Socket Cap Screw x8
Fuse x2
Wire Tie x25

Product Packing List

Board Assembly x2

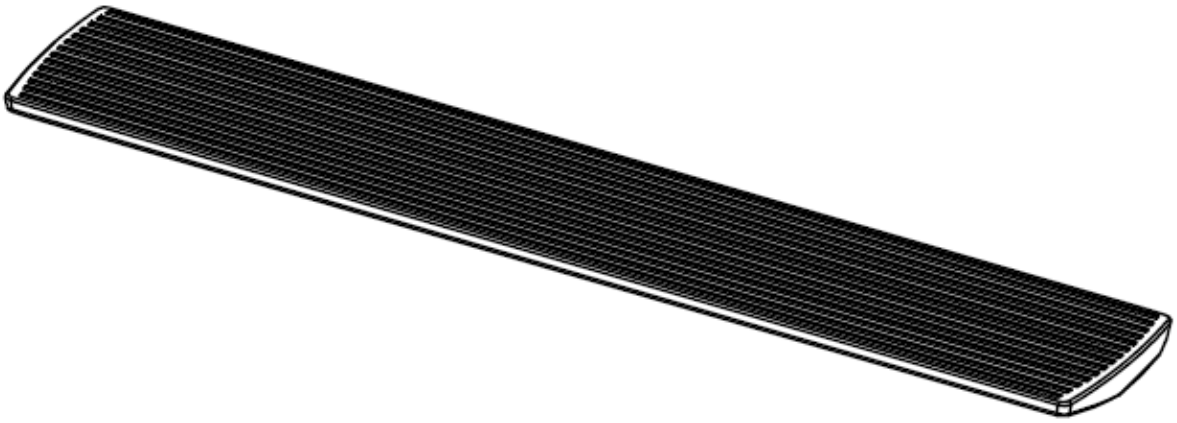

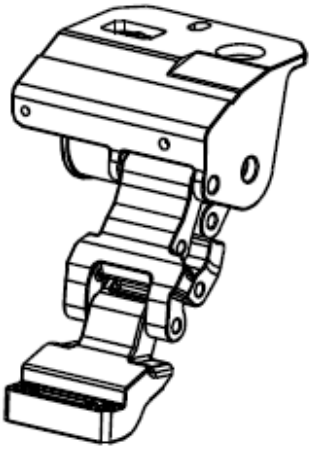

Front Left Motor x1
Driver Side

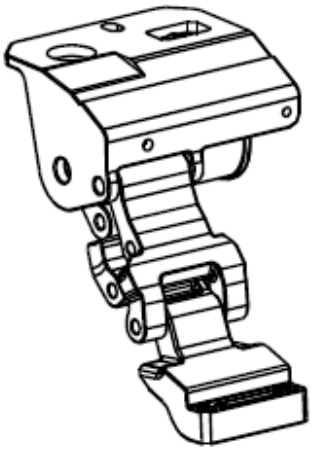

Front Right Motor x1
Passenger Side

Rear Right Motor x1
Passenger Side
4D Only

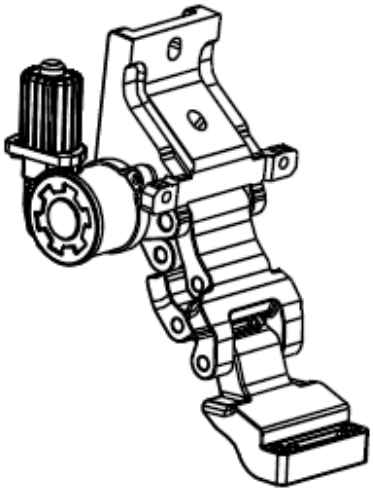

Rear Left Motor x1
Driver Side
4D Only

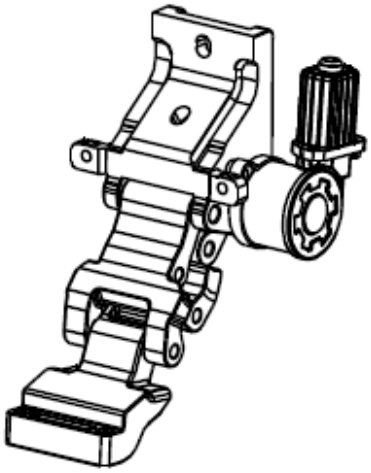

trailfortress.com/power-running-boards-ford-bronco-4-door-rough-country-psr51330

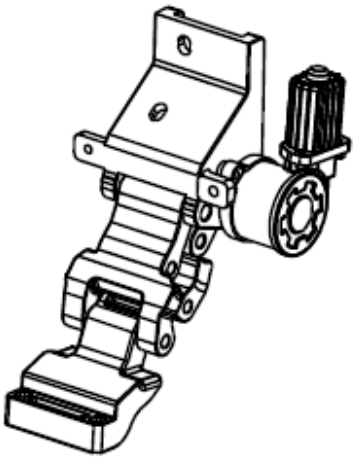

Rear Left Motor x1
Driver Side
2D Only

Rear Right Motor x1
Passenger Side
2D Only

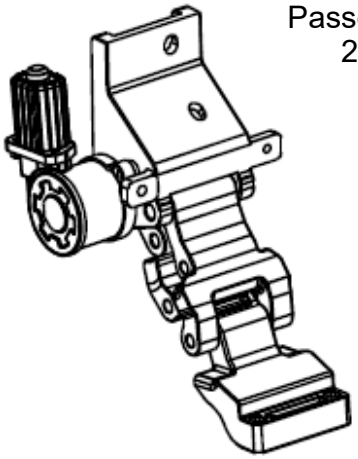

LED Lights x4

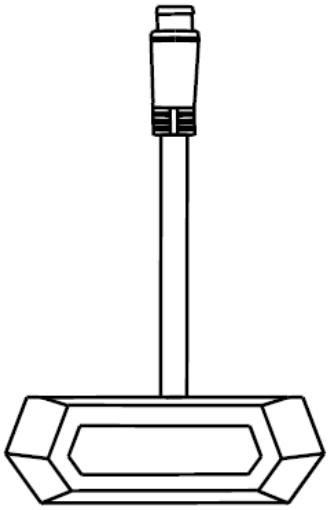

LED Lights x4

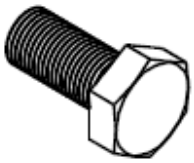

M10x25mm Hex Head Bolt
2D x6
4D x8

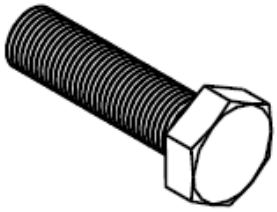

M8x25mm Hex Head Bolt x2

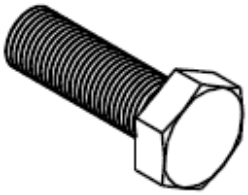

M10x35mm Hex Head Bolt x4



Fuse x2

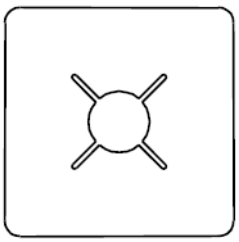

Lock Washer x2
2D Only

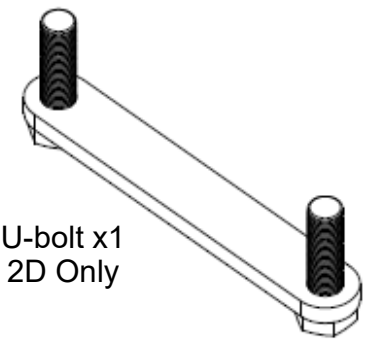

U-bolt x1
2D Only

trailfortress.com/power-running-boards-ford-bronco-4-door-rough-country-psr51330



8mm Spring Washer x2

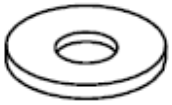

8mm Flat Washer x2



10mm Spring Washer
2D x10
4D x12

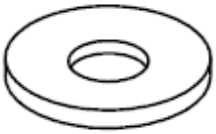

10mm Flat Washer
2D x10
4D x12



M6x25mm Socket Cap Screw x8



M8 Flange Nut x2
2D Only

Controller Assembly x1
4D

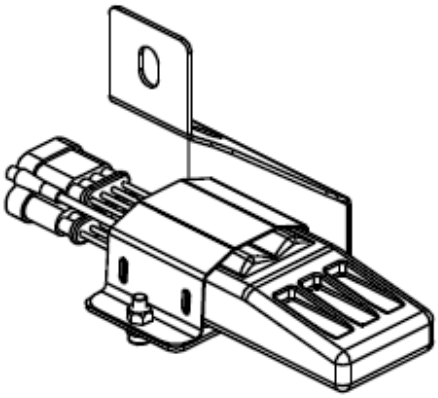

trailfortress.com/power-running-boards-ford-bronco-4-door-rough-country-psr51330

Product Packing List

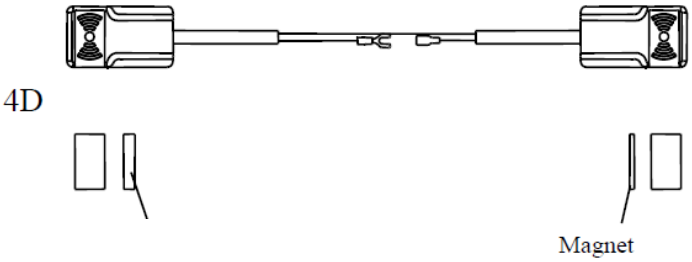

Body Mounted Module x2
Door Mounted Magnet
4D x4
2D x2

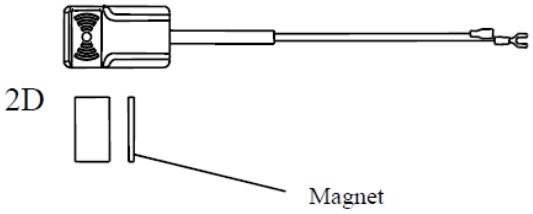

Controller Assembly x1
2D

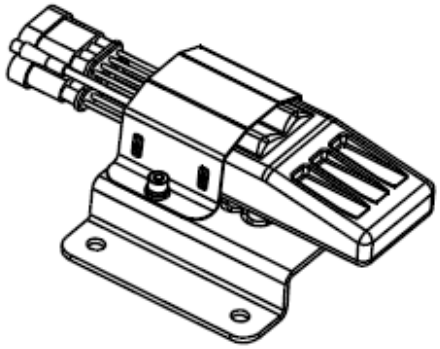

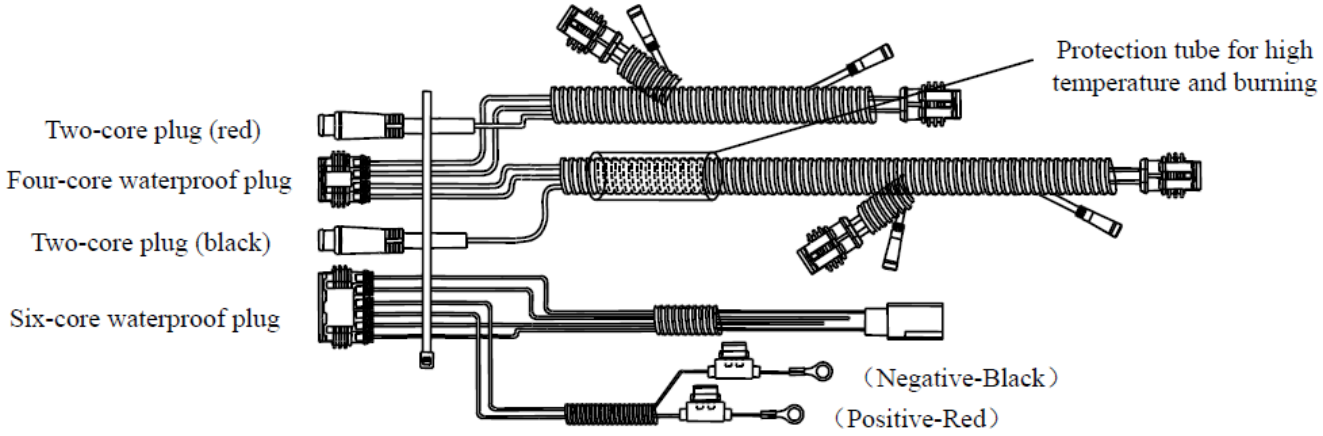

Wiring Harness x1

trailfortress.com/power-running-boards-ford-bronco-4-door-rough-country-psr51330

1. Install the front driver motor with the supplied hardware in the specified locations. **See Photo 1A.** Mount the front driver motor on the pinch weld. **See Photo 1B.** Loosely tighten bolts using a 13mm wrench for the M8 bolt and a 17mm wrench for the M10 bolts.

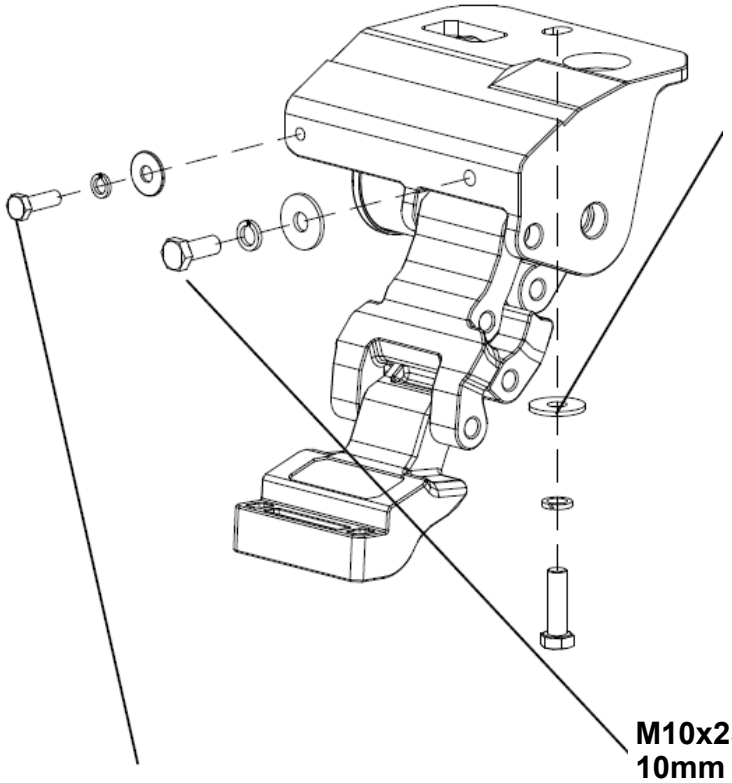

M10x35mm bolt
10mm Spring Washer
10mm Flat Washer

M10x25mm bolt
10mm Spring Washer
10mm Flat Washer

M8x25mm bolt
8mm Spring Washer
8mm Flat Washer

Photo 1A

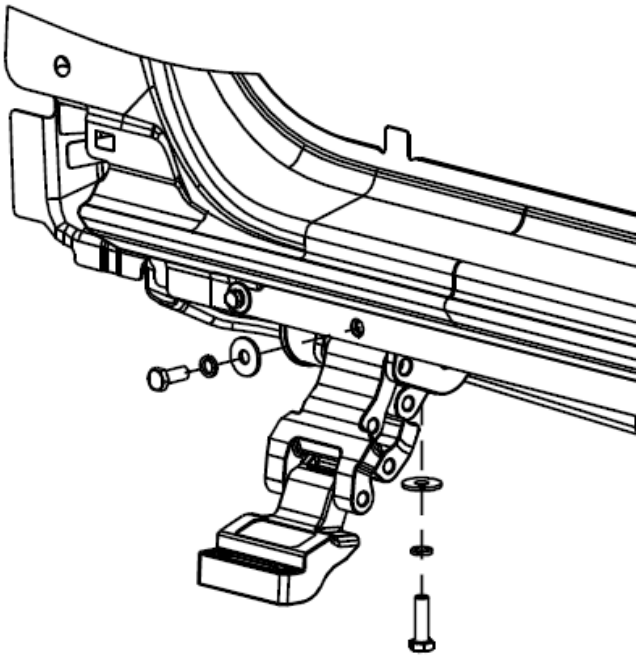

Photo 1B

trailfortress.com/power-running-boards-ford-bronco-4-door-rough-country-psr51330

2. Install the rear driver motor with the supplied hardware in the specified locations. **See Photo 2A.** Mount the rear driver motor on the pinch weld. **See Photo 2B.** Loosely tighten with a 17mm wrench. **NOTE:** Two door models follow the same installation process, but with a different rear motor.
3. Repeat Step 1 and Step 2 for passenger side of vehicle.

M10x35mm bolt
10mm Spring Washer
10mm Flat Washer

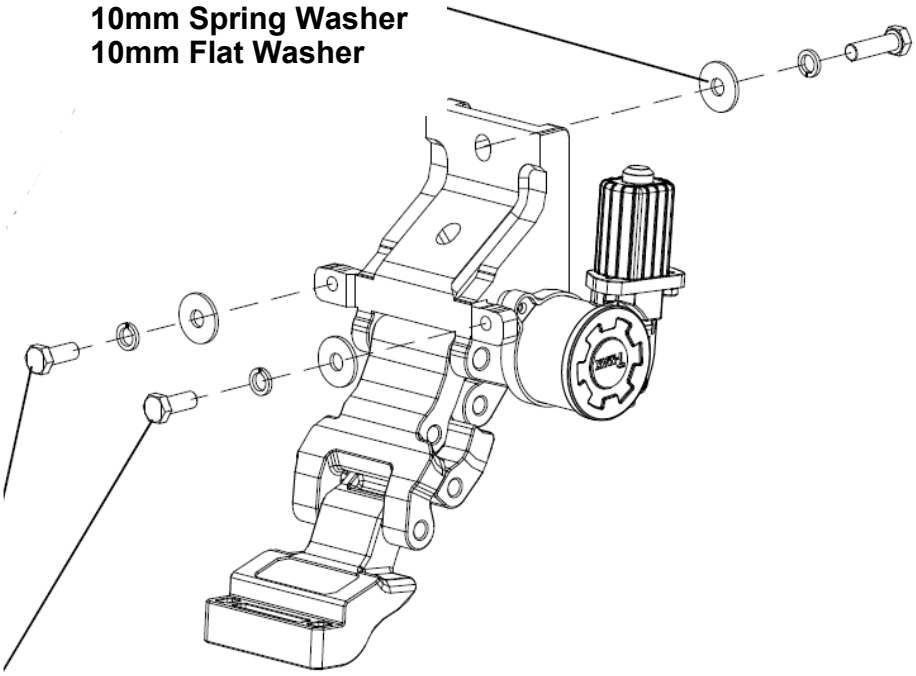

Photo 2A

M10x25mm Bolt x2
10mm Spring Washer x2
10mm Flat Washer x2

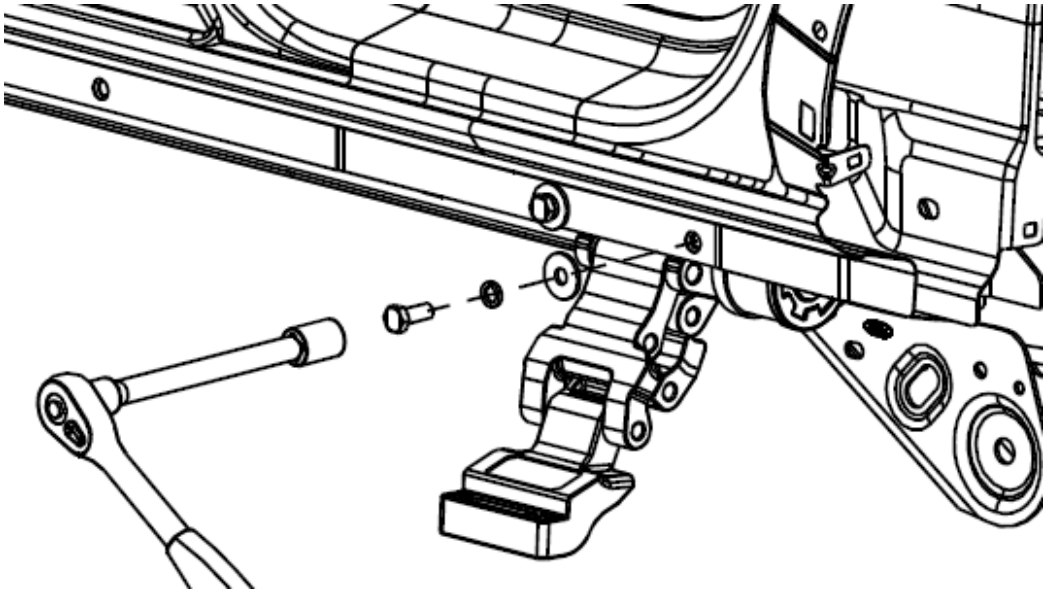

Photo 2B

trailfortress.com/power-running-boards-ford-bronco-4-door-rough-country-psr51330

4. **Four Door Model:** Install the controller assembly with two (2) M10x25mm hex head bolts, spring washers, and flat washers. Tighten with a 17mm wrench. **See Photo 3.**

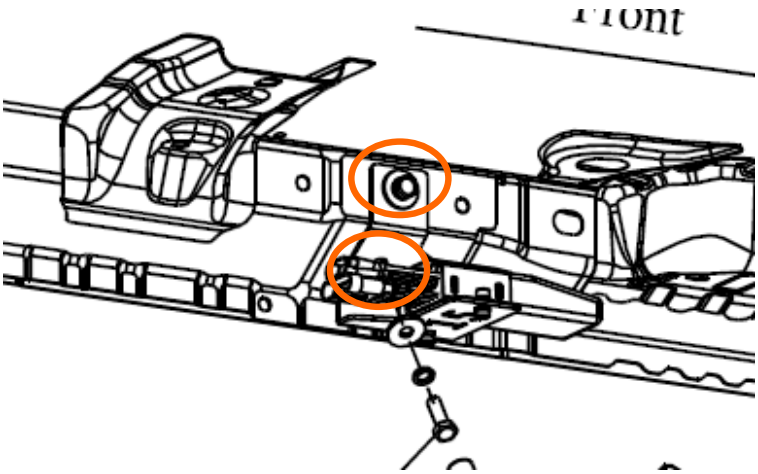

Photo 3

5. **Two Door Model:** Install the U-Bolt on the driver side of the frame. **See Photo 4.**
6. **Two Door Model:** Place the two lock washers over the threads of the U-Bolt. **See Photo 5.**
7. **Two Door Model:** Mount the controller assembly over the U-Bolt and tighten supplied M8 flange nuts with a 13mm wrench. **See Photo 6.**

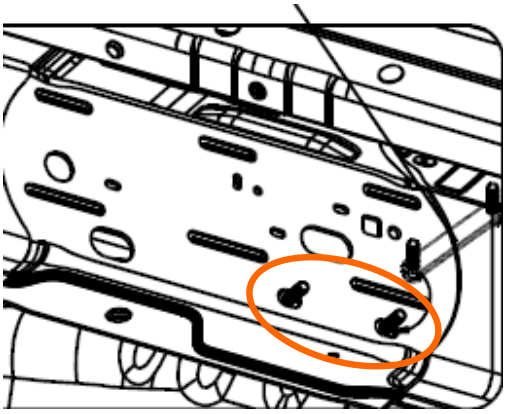

Photo 4

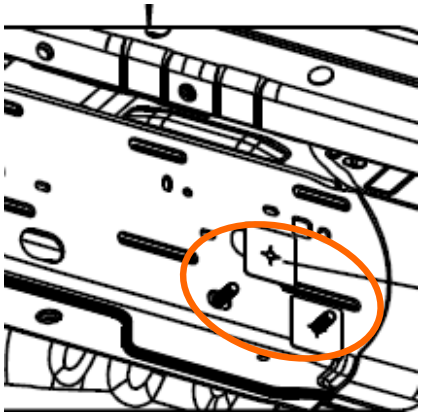

Photo 5

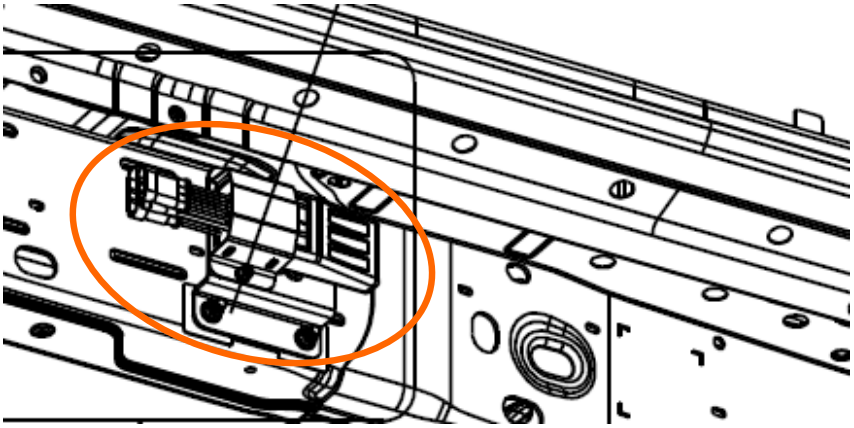

Photo 6

trailfortress.com/power-running-boards-ford-bronco-4-door-rough-country-psr51330

8. Install board assembly on driver side with four (4) M6x25mm socket cap screws (two for each motor). Tighten with a 5mm Allen wrench. When board assembly is in desired position, fully tighten the motor mounting bolts. **See Photo 7.**
9. Repeat for passenger side of vehicle.

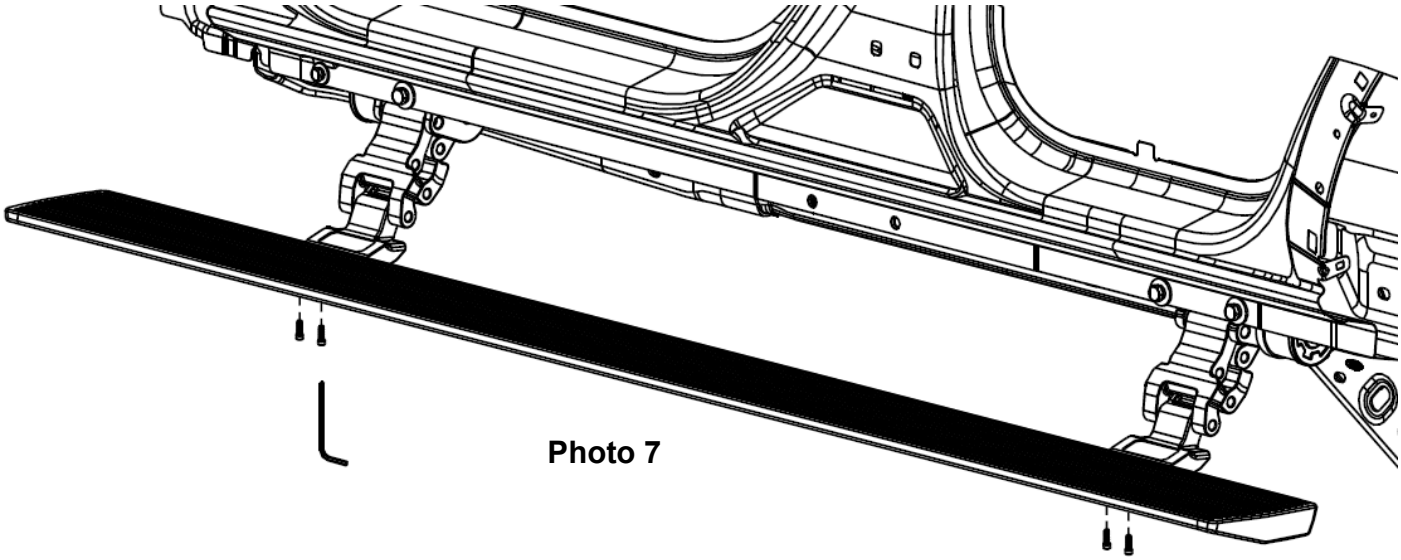

Photo 7

10. Remove the kick panel and the scuff plate on the driver side of the vehicle.
11. Lift the carpet to expose the rubber grommet on the driver side. Feed the brown signal wire, white signal wire, and On/Off switch wires through the rubber grommet. **See Photo 8.**



trailfortress.com/power-running-boards-ford-bronco-4-door-rough-country-psr51330

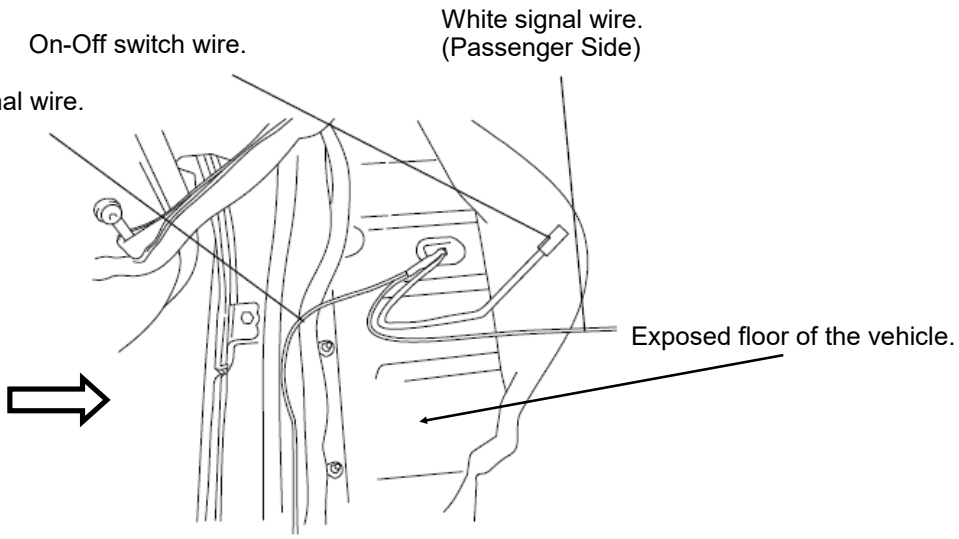

Photo 9

Driver side shown.

12. Install the supplied wiring harness' Brown, White and On-Off switch wire through the grommet in the drain plug under the floor of the vehicle to the inside of the cab. **See Photo 9.**

NOTE: Apply waterproof tape to the wiring harness and the drain plug once the wiring harness has been fully installed.

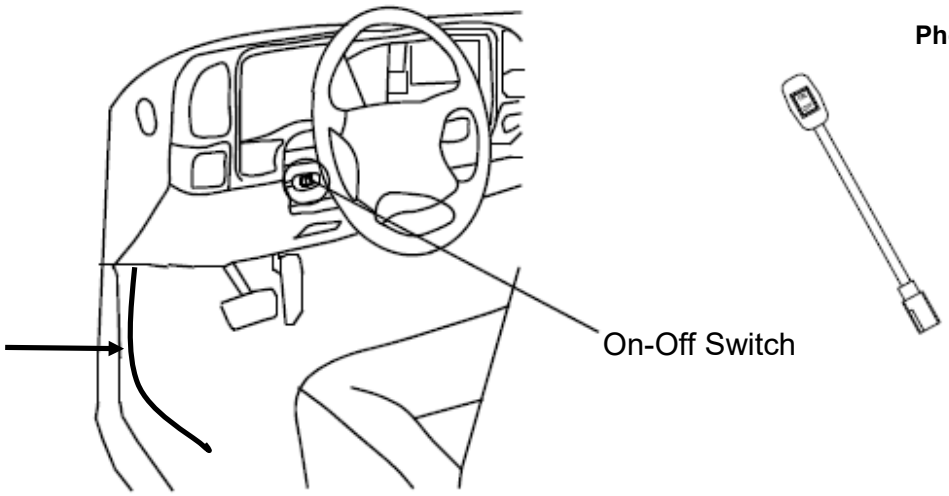

Photo 10

NOTE: Secure the On-Off Switch wiring harness from the dash to the drain plug under carpet.

13. Mount the On-Off switch. Clean the area of installation and remove the covering on the double sided tape and apply it to the dash. Switch shown on the upper dash. **See Photo 10.**
14. Connect the On-Off switch to the wiring harness installed in the floor of the cab. Leave switch in the On position, this will keep the motors in the extended position as installed to the vehicle when power is connected. Secure the On-Off switch wiring harness behind the dash to the drain plug under the carpet.

NOTE: Normal function of the On-Off switch once power has been connected to the positive and negative fused links on the battery. (On) the steps will extend for use and entering the vehicle. Steps will retract when both doors per side are closed connecting the magnet to the module. (Off) the steps will retract to the body of the vehicle even when the doors are open and the magnet is away from the module.

trailfortress.com/power-running-boards-ford-bronco-4-door-rough-country-psr51330

2D Module Installation

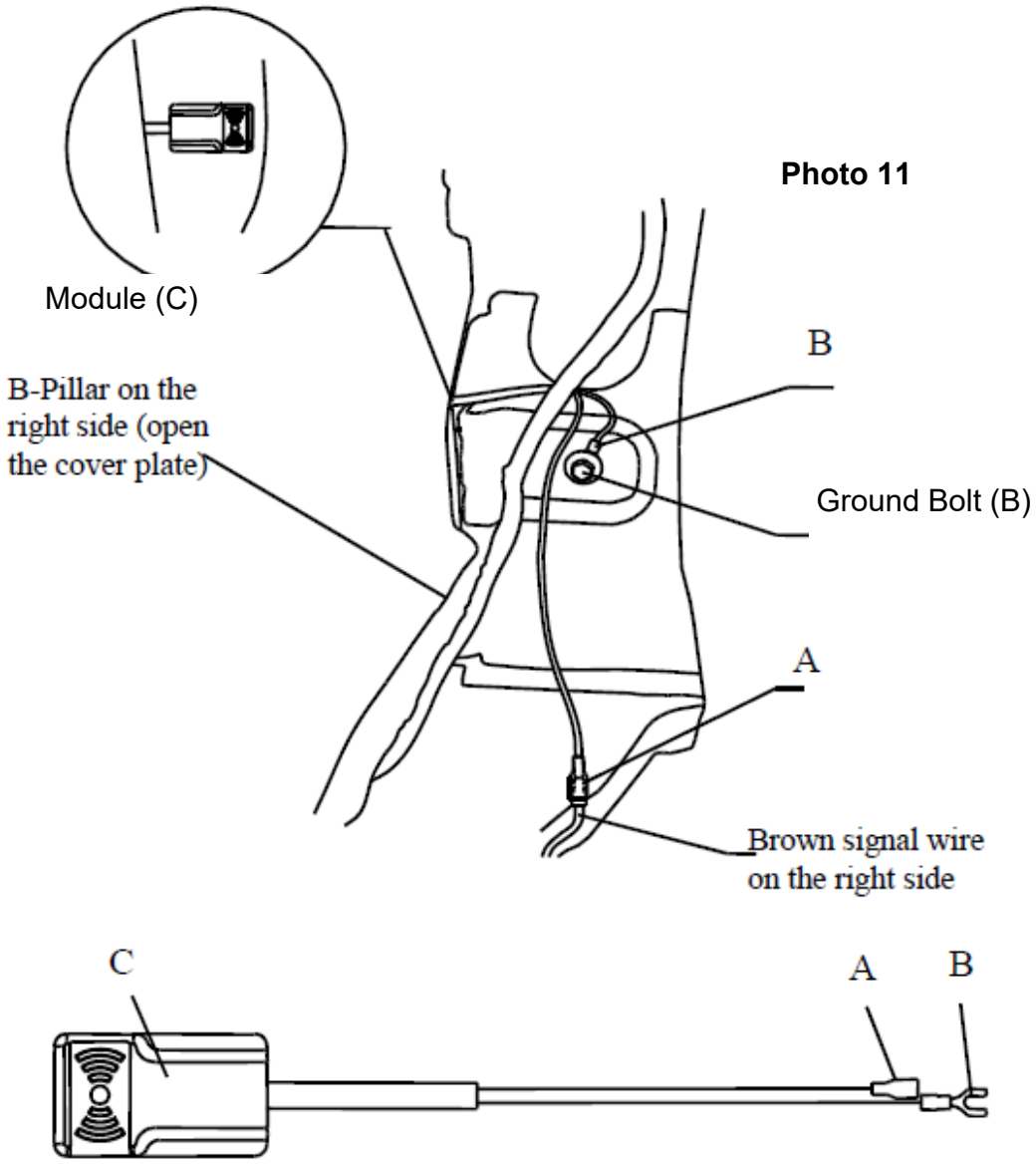

Photo 11

15. Remove the interior trim panel on the driver side of the vehicle (*If interior trim is equipped with air bag, use caution*). Connect the brown signal wire from the wiring harness to terminal (A) on the module. Connect module wire (B) to the vehicle ground. Remove the double sided tape backing and place the front module (C) in a secure location to the inside of the door jamb. **See Photo 11.** Remove the cover off of the double sided tape and place the place the rear module (C) in a secure location to the inside of the door jamb.
16. Follow step 15 and install the passenger side module using the white wire from the supplied wiring harness.

NOTE: The magnets will be installed in a later step after the power has been connected.

trailfortress.com/power-running-boards-ford-bronco-4-door-rough-country-psr51330

4D Module Installation

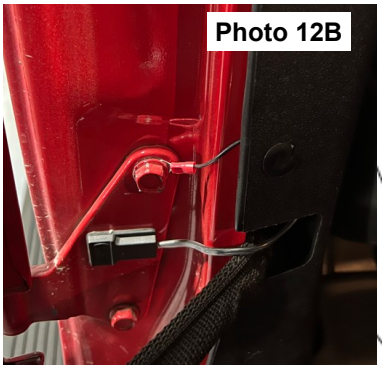

Rear Passenger Door Module (C)

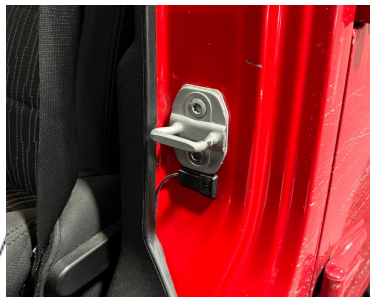

Front Passenger Door Module (C)

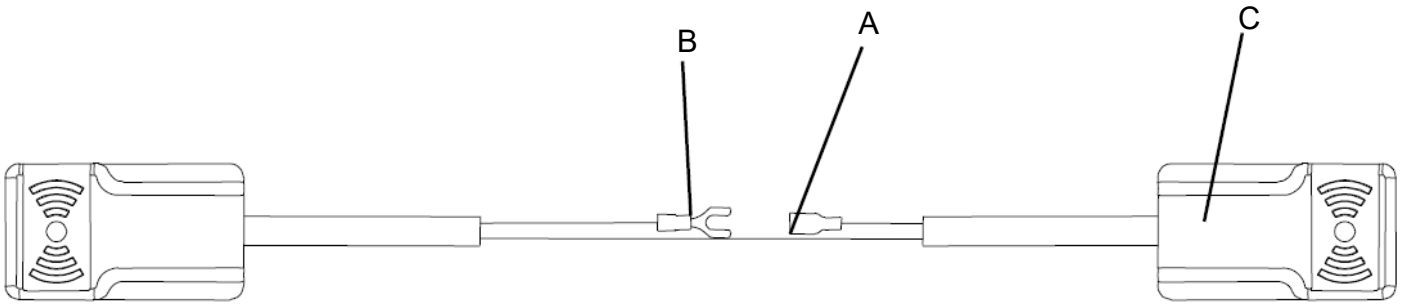

17. Remove the interior trim panel on the driver side of the vehicle (*If interior trim is equipped with air bag, use caution*). Connect the brown signal wire from the wiring harness to terminal (A) on the module. Connect module wire (B) to the vehicle ground. Remove the double sided tape backing and place the front module (C) in a secure location to the inside of the door jamb. **See Photo 12A.** Remove the cover off of the double sided tape and place the place the rear module (C) in a secure location to the inside of the door jamb. **See Photo 12B.**
18. Follow step 14 and install the passenger side module using the brown wire from the supplied wiring harness. *Photos 12A and 12B are shown from the driver side of the vehicle*.

NOTE: The magnets will be installed in a later step after the power has been connected.

trailfortress.com/power-running-boards-ford-bronco-4-door-rough-country-psr51330

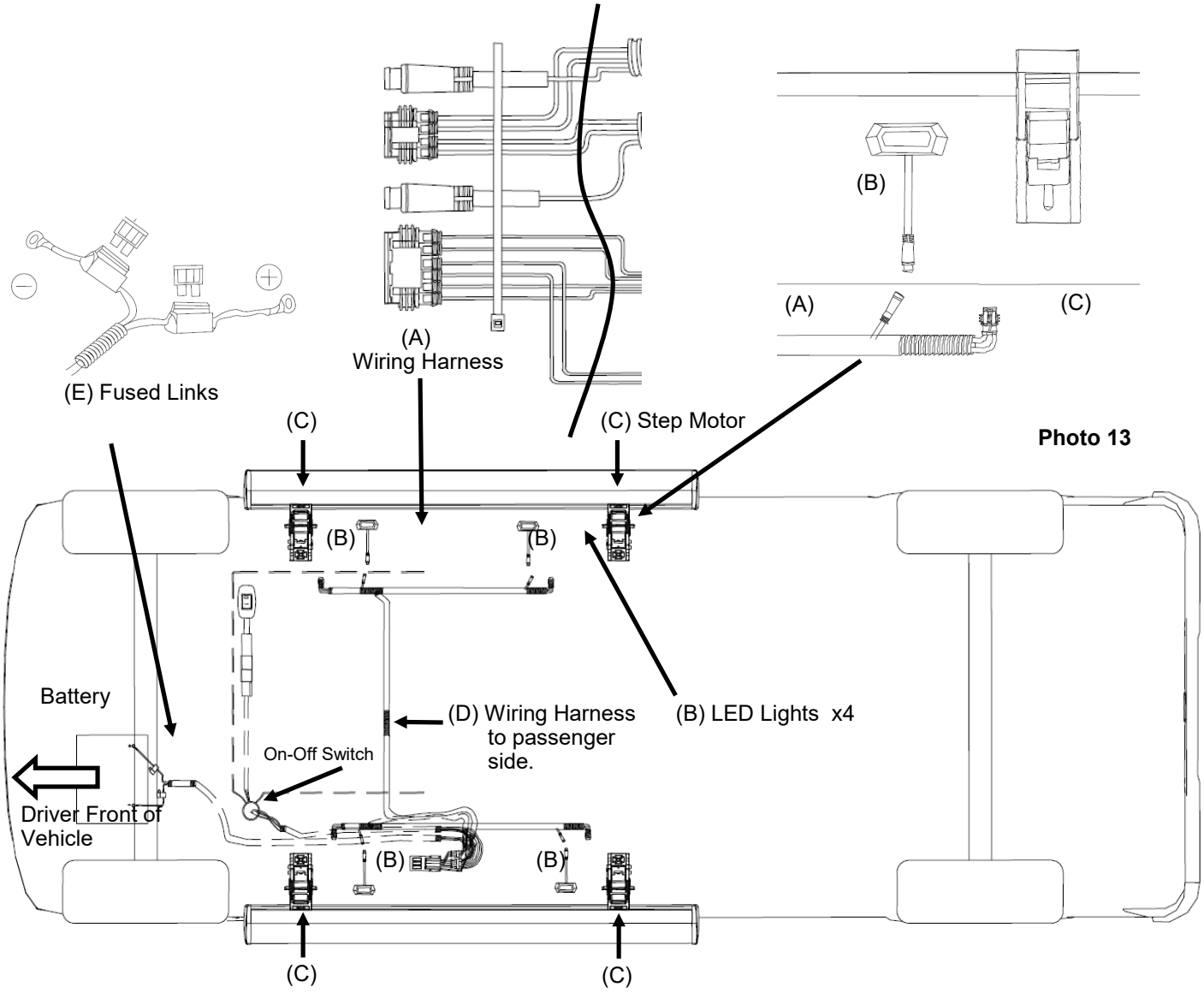

19. (A) Connect the 4 plugs of the wiring harness to the controller assembly mounted to the body of the vehicle on the driver side. **See Photo 13.**
20. (B) Mount the (4) LED Lights. Clean the surface of the pinch weld under the center of each door on the driver and passenger side of the vehicle. Remove the double sided tape backing and apply to the pinch weld.
21. (A) Route the wiring harness along the frame of the driver side.
22. (C) Connect the step motor labeled to the corresponding wiring harness (Driver Side) Front Left Motor and Rear Left Motor.
23. (B) Connect the LED light plugs on the driver side.
24. (D) Route the wiring harness across the frame to the passenger side of the vehicle.
25. (C) Connect the step motor labeled to the corresponding wiring harness (Passengers Side) Front Right Motor and Rear Right Motor.
26. (B) Connect the LED light plugs on the passenger side.
27. (E) Route the fused link harness along the passenger side frame up to the battery box, secure the wiring harness with the supplied wire ties away from heat or moving parts. Connect the fused links to the Positive and Negative side of the battery.

trailfortress.com/power-running-boards-ford-bronco-4-door-rough-country-psr51330

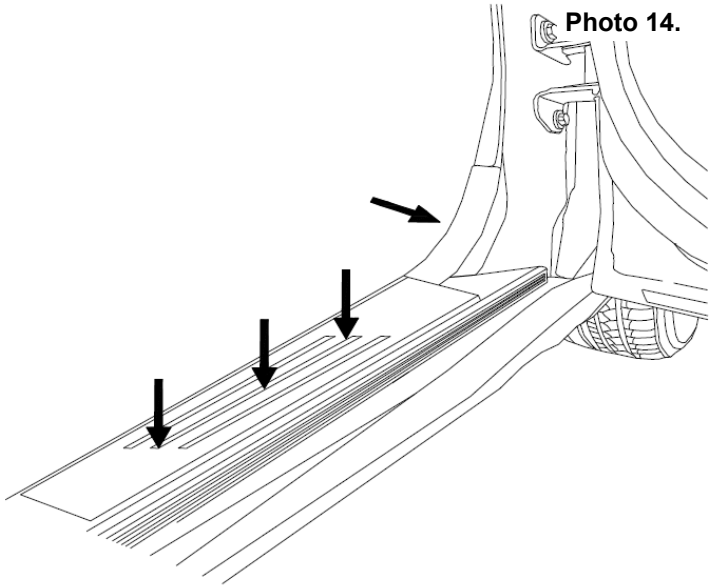

Photo 14.

28. Adjust the carpet into place and re-install the B-pillar trim, kick panel and the scuff plate on the driver and passenger side of the vehicle. **See Photo 14.**
29. Using the (On-Off) switch cycle the steps (2-3 Times) leave them in the down position. The switch will be in the (On) position.
30. At this time, tighten the rear M8 motor bracket bolt's using a 13mm socket to 22ft/lbs and the front pinch weld mount M10 bolts using a 17mm socket to 40ft/lbs.
31. Tighten the step to the motor bracket using a 5mm Allen to 14ft/lbs.
32. Place the magnet on the vehicle door aligned with the module. (Shown on the passenger side) for aluminum door vehicles this can be done with painter's tape to test and ensure it will work correctly. **See Photos 15 and 16. NOTE:** 2D models only have two magnets. On 4D models, the thicker magnet goes on the rear door.
33. Ensure the On-Off switch is in the ON position. Now test the front and rear doors on the right and left side of the vehicle. If each one works correctly, the magnets are in line with the module. Mark the magnets position on each of the 4 doors, remove the covering from the double sided tape and stick the magnet to the door in the marked position.

NOTE: The On-Off switch will remain in the On position for normal use. We recommend the switch be in the Off position in icy or off roading conditions to prevent binding or damage to the step board, motor or motor bracket.



Photo 15

Magnet Placed on the passenger front door.

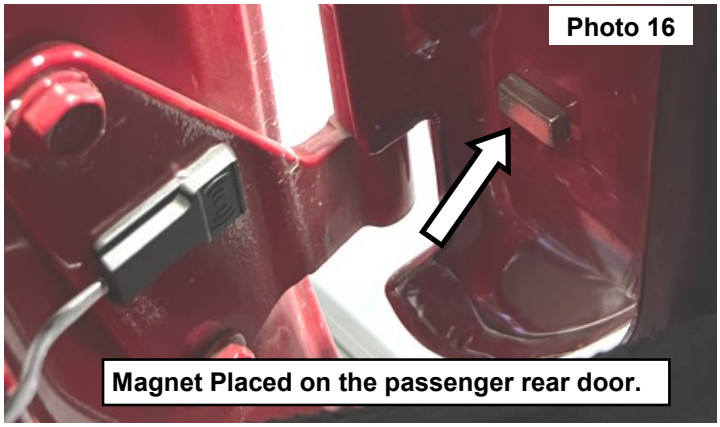

Photo 16

Magnet Placed on the passenger rear door.

trailfortress.com/power-running-boards-ford-bronco-4-door-rough-country-psr51330

Troubleshooting Guide

Steps not working.

- On/Off Switch in On position
- Check for proper Power and Ground connections to battery
- Check Fuses in the Positive and Negative wires to the battery
- Check Ground connection on Pass and Driver side at B-Pillar
- Check all plugs and connections to ensure they are seated properly and making a good connection

Steps work with On/Off Switch but not with doors opening and closing.

- Check Module to Magnet alignment on doors
- Use a magnet to position over module

Steps drop when door is closed and retract when door is opened.

- Motors will operate in reverse polarity. Check the fused links on the battery for Positive and Negative connection

Torque Specs:

Size	Grade 5	Grade 8	Size	Class 8.8	Class 10.9
5/16”	15 ft/lbs	20ft/lbs	6MM	5ft/lbs	9ft/lbs
3/8”	30 ft/lbs	35ft/lbs	8MM	18ft/lbs	23ft/lbs
7/16”	45 ft/lbs	60ft/lbs	10MM	32ft/lbs	45ft/lbs
1/2”	65 ft/lbs	90ft/lbs	12MM	55ft/lbs	75ft/lbs
9/16”	95 ft/lbs	130ft/lbs	14MM	85ft/lbs	120ft/lbs
5/8”	135ft/lbs	175ft/lbs	16MM	130ft/lbs	165ft/lbs
3/4”	185ft/lbs	280ft/lbs	18MM	170ft/lbs	240ft/lbs

By purchasing any item sold by Rough Country, LLC, the buyer expressly warrants that he/she is in compliance with all applicable, State, and Local laws and regulations regarding the purchase, ownership, and use of the item. It shall be the buyers responsibility to comply with all Federal, State and Local laws governing the sales of any items listed, illustrated or sold. The buyer expressly agrees to indemnify and hold harmless Rough Country, LLC for all claims resulting directly or indirectly from the purchase, ownership, or use of the items.

trailfortress.com/power-running-boards-ford-bronco-4-door-rough-country-psr51330