# Rough Country 99515_A Installation Instructions

99515_A

Part number: 99515_A

trailfortress.com/rough-country-bluetooth-led-soundbar-99515-a

Scan for fitment, price and install help

**Thank you for choosing Rough Country for all your vehicle needs.**

Before beginning installation, read all instructions and be sure you have all parts needed for installation.

After installation, be sure to check all fasteners for proper torque and check for adequate clearance between all components. It is also recommended to periodically check all hardware for tightness.

For all questions and concerns about this product, please call 1-800-222-7023. We will be happy to assist you.

# RESON8 BLUETOOTH LED SOUND BAR

## Installation and Operation Instructions



# PARTS LIST




A. Sound Bar
B. End Mounts
C. End Mount Pads
D. Mounting Hardware
E. Auxiliary Power Output
F. Auxiliary Output Connector
G. Battery Power Input
H. Power Input 8ft Cable
I. Wireless Remote Control
J. End Mount Hardware

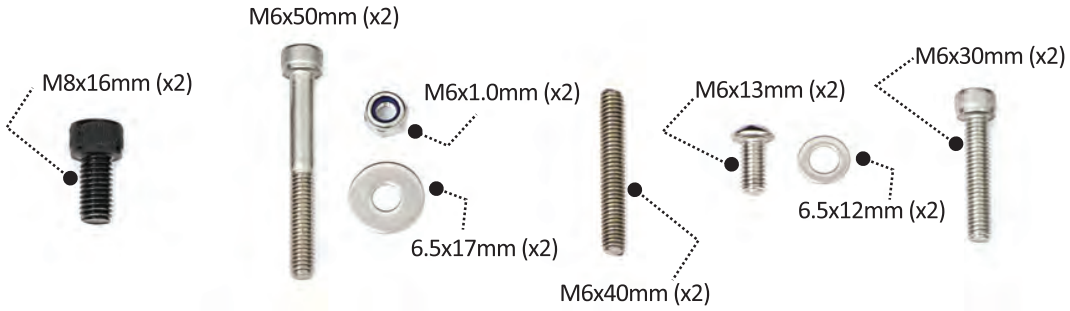


# INDEX


Safety & Warnings / Care & Maintenance .....3
Sound Bar Installation .....4
Control Panel / Pairing With Bluetooth .....5
Sound Bar Wiring / Diagram .....6
Auxiliary Ports / FM Radio / Sound bar LEDs .....7
Accessory Power / Remote Control .....8
Connect using TWS / USB Music Mode .....9
Specs and Dims / FCC Statement .....10




trailfortress.com/rough-country-bluetooth-led-soundbar-99515-a

# IMPORTANT!!

**Follow steps below to maintain water resistance!**

**The Rough Country Sound Bar has a waterproof rating of IP66. However, all caps/seals for Aux-in, Aux-out, and USB ports must be properly installed before the unit can be exposed to dust and water. If caps are open, the unit is NOT watertight.**

**Firmly press rubber caps and USB door to seal USB and auxiliary ports. USB door should be flush with edges of the control panel and caps to auxiliary ports should snap firmly into place.**

---

# SAFETY & WARNINGS

**Improper installation and/or operation may cause damage to equipment. Please, observe all safety precautions and read instructions carefully before operating your sound bar. Keep these instructions for future reference.**

1. Do NOT modify or remove any component parts of the speaker. Doing so could cause damage to seals or housings and allow water to enter unit. Never use speaker if internal parts have been exposed to water. This may cause fire or electrical shock.
2. Always comply with any music or noise regulations.
3. Always check that rubber seals are fully installed when not in-use. This may prevent any long-term moisture damage that may occur.
4. Be sure to properly clean unit from water, sand, dirt and other debris before storing.
5. Contact Rough Country or return the sound bar to a certified recycling center, if you suspect water has entered the unit or if the unit has experienced any damage that may cause the unit to take in water.
6. Do NOT power sound bar on, if you suspect water has entered the unit. Powering the device with water inside may damage the unit by causing a fire or electric shock.
7. Be sure to unplug all USB cables and auxiliary jacks and fully install rubber caps before entering water environments.
8. Never attempt to repair your sound bar. Doing so may cause further damage and void its warranty.

---

# Care & Maintenance

**The Rough Country Sound Bar has an IP66 waterproof rating and is intended for indoor and outdoor use. This speaker can be exposed to dust and water, but is NOT intended for underwater use. Proper care and maintenance will help extend the life of the sound bar.**

1. Ensure all caps are sealed prior to cleaning or rinsing. Water could enter any open ports, if not proper closed.
2. Do NOT open any caps until unit has fully dried.
3. Check rubber caps and openings for water and other debris before attempting to close.
4. Inspect rubber caps periodically for signs of wearing.
5. Periodically clean rubber caps with a moist cloth. Never use chemicals to clean. Never spray water directly into open caps.
6. Always rinse with tap water after using sound bar in salt water environments.
7. Do NOT store your sound bar in high temperature areas and avoid prolonged UV exposure.



trailfortress.com/rough-country-bluetooth-led-soundbar-99515-a

# SOUND BAR INSTALLATION

**The Rough Country Sound Bar includes 2 mounting options. Standard L-Brackets, which connect to each end of the sound bar and the rail-mount located on top of the sound bar.**

**L-Bracket End Mounts**



**Top Rail-mount**



**Mounting Location:**
Find the desired location for the sound bar and choose the best mounting option for the install. Before fully installing the sound bar, check for proper clearance and ensure speakers are in the desired listening position.

**Installing using L-Brackets:**
1. Attach the L-Brackets to both ends of the sound bar with the supplied M8x16 bolts. Do not fully tighten bolts at this time.
2. Place the sound bar in the desired location. Install rubber isolators between the L-Brackets and vehicle. Using the supplied M6x50 bolts and washers, attach L-brackets to the vehicle and fully tighten bolts to complete the install.
3. Once mounted to the vehicle, make adjustments to ensure the sound bar is in the perfect position for listening. Fully tighten end mount bolts to keep in desired position.

**Attach L-Brackets**



**Install Isolators**



**Installing using Rail-Mount:**
1. Place the sound bar in the desired location and install using supplied M6x13 bolts and washers. Fully tighten bolts to complete the install.



trailfortress.com/rough-country-bluetooth-led-soundbar-99515-a

# CONTROL PANEL




**Power:** Press and hold to power on or off. Quickly press and release to send power to connected 12V accessory. (pg. 8)

**Mode:** Press and release to cycle sources. Bluetooth/FM Radio/Aux-in/USB Music.

**Previous:** Press for previous track or tune to FM radio station.

**Skip:** Press for next track or tune to FM radio station.

**Volume (-):** Press to adjust volume down.

**Volume (+):** Press to adjust volume up

**Rear Light Bar:** Press to power on LEDs, cycle through colors, or select light modes. Choose from white(high/med/low) Red, Green, Blue, Pink, Yellow, Fade, Sync or Off. (pg. 7)

**Speaker LEDs:** Press to power on LEDs, cycle though colors, or select light modes. Choose from white(high/med/low) Red, Green, Blue, Pink, Yellow, Fade, Sync or Off. (pg. 7)

**Bluetooth/TWS:** Press and release to begin Bluetooth pairing. Press and hold to pair using TWS. (pg. 9)

**Play/Pause/Answer:** Press to play or pause current tracks or answer and end phone calls from a paired device. While in FM mode, press and hold to seek next available station. Press again to select station.

**USB Connection:** USB-A and USB-C ports for charging compatible devices or playing audio files from flash drive. (pg. 9)

# PAIRING BLUETOOTH DEVICE

**Follow the steps below to pair a device to the sound bar using Bluetooth. These steps are for the first connection only. Once a device is connected successfully, the sound bar will reconnect automatically.**

1. Power on device.
2. Power on sound bar and press Bluetooth button to begin pairing process. ”Bluetooth” voice prompt will sound.
3. On the pairing device, go to Bluetooth settings. Find and choose RC99515 to connect to sound bar.
4. Device should be connected within 5 secs. If not, power off device and repeat the above process.
5. Once connected, “Bluetooth Connected” voice prompt will sound.

**Press Bluetooth Button**



**Choose RC99515**






trailfortress.com/rough-country-bluetooth-led-soundbar-99515-a

# SOUND BAR WIRING

**The Rough Country Sound Bar must be connected to a 12V 10A power supply ONLY. Connecting to a power source that is not 12V 10A will cause damage to the speaker.**

**Connecting to Power Supply:**

1. Attach supplied wiring harness to the red 12V DC input connector on the sound bar.
2. Carefully run the wiring harness from the sound bar to the 12V DC power source. Do not run wiring harness along sharp edges or areas that may become hot.

**Installation for Gas Vehicles:**

1. Carefully loosen the positive (+) and negative (-) bolts from the battery terminals.
2. Attach the negative (**black**) wire connector to the negative (-) battery terminal and tighten bolt firmly.
3. Attach the positive (**red**) wire connector to the positive (+) battery terminal and tighten bolt firmly.

**Installation for Electric Vehicles:**

**If using a 16V or higher power supply, a DC-DC converter is required. Sound bar must be connected to 12V 10A system ONLY.**

1. Toggle the electric vehicle to Tow Mode. (Usually located near the vehicle's battery)
2. Carefully loosen the positive (+) and negative (-) bolts from the DC-DC converter terminals.
3. Attach the negative (**black**) wire connector to the negative (-) DC-DC converter terminal and tighten bolt firmly.
4. Attach the positive (**red**) wire connector to the positive (+) DC-DC converter terminal and tighten bolt firmly.
5. Toggle vehicle back to Run Mode.

# WIRING DIAGRAM

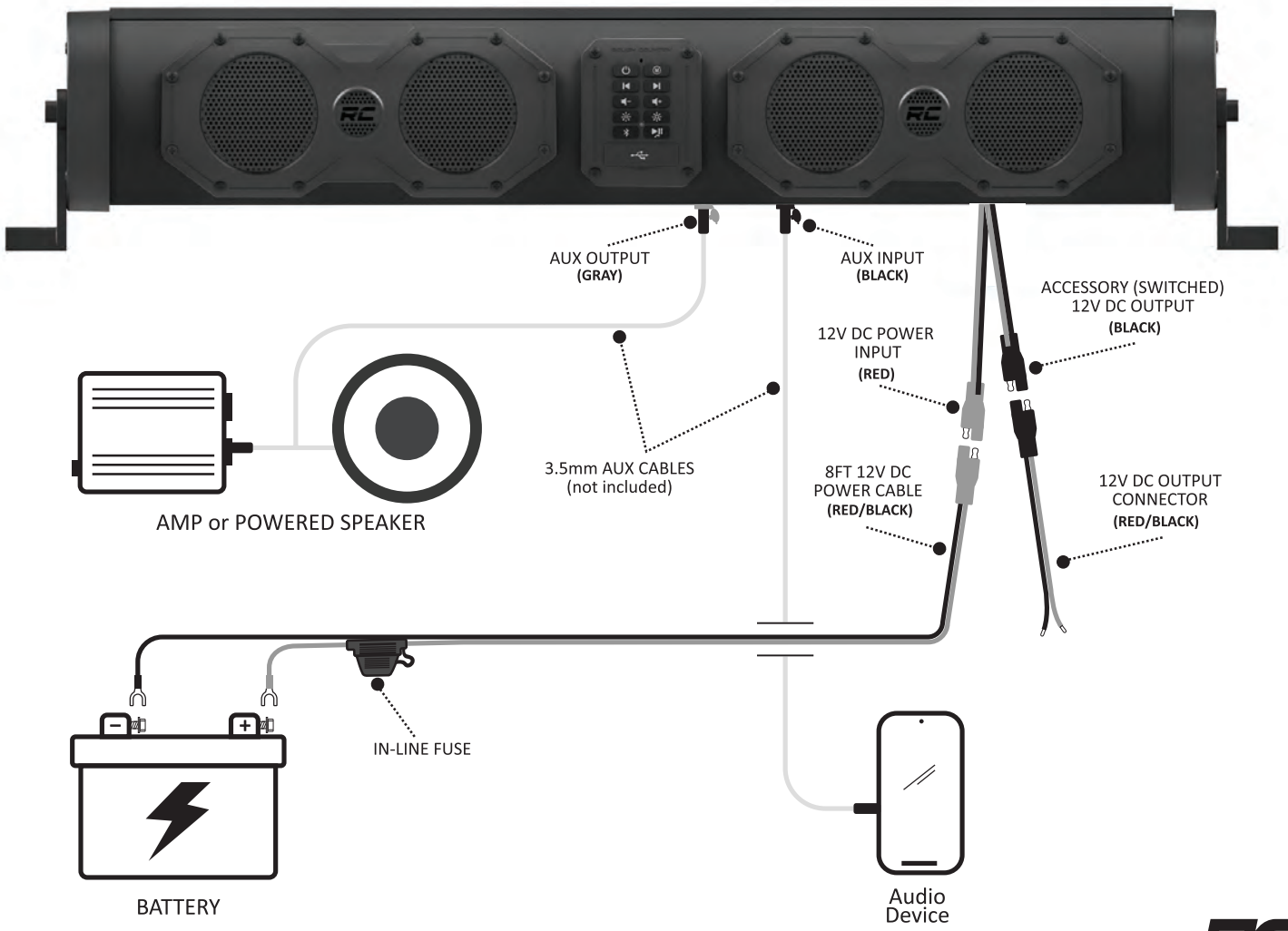




trailfortress.com/rough-country-bluetooth-led-soundbar-99515-a

# CONNECTING TO AUXILIARY PORTS

**Follow the steps below, if connecting a device to the auxiliary input or if connecting to auxiliary output to another amp or powered speaker.**

**Connecting to Aux-In:**
1. Connect a 3.5mm cable into the black aux-in port on the sound bar.
2. Connect the other end of the 3.5mm cable to the device.
3. Press the Mode Ⓜ button to choose aux-in as the source.

**Connecting to Aux-Out:**
1. Connect a 3.5mm cable into the gray aux-out port on the sound bar.
2. Connect the other end of the 3.5mm cable to the amp or powered speaker.

---

# FM RADIO

**Press Mode until FM Radio source is announced. Once in FM mode, press previous ⏮ or skip ⏭ buttons to tune radio stations or press and hold play/pause ⏯ button to seek next available station. Press play/pause again to select a station.**

---

# SOUND BAR LIGHTS

**The Rough Country Sound Bar features colorful LEDs and different light modes. The LEDs are displayed in each speaker and the rear facing light bar. Both options can be controlled using the wireless remote or control panel on the sound bar.**

**Speaker LEDs:**
Press the speaker LED button on the control panel to toggle light options and light modes. You can choose between solid white(high/med/low), red, green, blue, pink, or yellow and choose fade or music sync.

**Light Bar LEDs:**
Press the light bar button on the control panel to toggle light options and light modes. You can choose between solid white(high/med/low), red, green, blue, pink, or yellow and choose fade or music sync.

**Fade:** Fades into each color slowly and repeats.
**Music Sync:** Flashes different colors in sync with the music from the sound bar.

---

# LED INDICATORS

**This sound bar is equipped with an LED indicator, in the center of the control panel, to help indicate the different modes and functions of the sound bar.**

**Solid Yellow:** Sound bar is connected to power and on standby
**Flashing Blue:** Bluetooth pairing mode
**Solid Blue:** Bluetooth mode and device is connected
**Solid Pink:** FM mode
**Solid Green:** Aux-in mode
**Solid Red:** USB Music mode
**Flashing Purple:** TWS Pairing mode
**Solid Purple:** TWS Connected

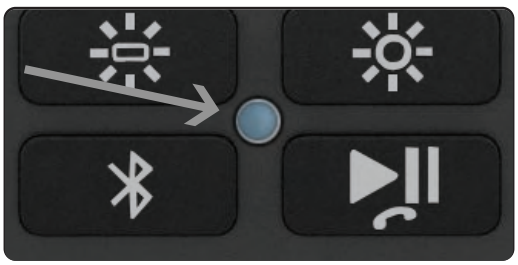



trailfortress.com/rough-country-bluetooth-led-soundbar-99515-a

# ACCESSORY SWITCHED POWER

**Power any 12V DC accessory using the Accessory 'Switched' Power connector on the sound bar. Carefully follow the steps and diagram below to connect using the accessory power option. Improper connections may result in fire or damage to the sound bar and accessory.**

**Connecting to ACC Output:**

1. Connect the accessory's power input wire to the supplied accessory power output connector.
2. Connect the accessory power connector to the black powered output connector of the sound bar.
3. Once the connections have been completed, quickly press and release the power button on the sound bar, or press the accessory ACC button on the remote to send power out to connected accessory.

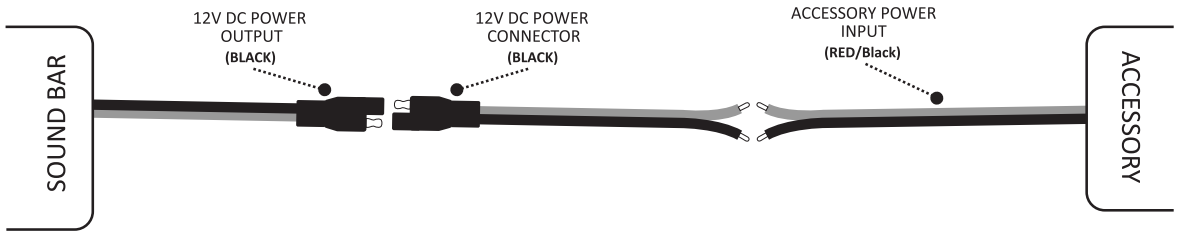


# REMOTE CONTROL

**The remote control will come ready to use and paired to your sound bar. After connecting your sound bar to power, remove the plastic tab from the battery clip.**

- **Power/Mode:** Press and hold to power sound bar on or off. Quickly press and release to cycle sources. Bluetooth/FM Radio/Aux-in/USB Music.
- **Previous:** Press for previous track or tune to FM radio station.
- **Play/Pause/Answer:** Press to play or pause current tracks. Answer or end calls from a paired device. While in FM mode, press and hold to seek next available station. Press again to select station.
- **Skip:** Press for next track or tune to FM radio station.
- **Volume (-):** Press to adjust volume down.
- **Volume (+):** Press to adjust volume up
- **Speaker LEDs:** Press to power speaker LEDs on and off. Press **+** or **-** to toggle colors and functions.
- **Rear Light Bar:** Press to power light bar on and off. Press **+** or **-** to toggle colors and functions.
- **Accessory Mode:** Press and release accessory button to send power to connected 12V accessory.

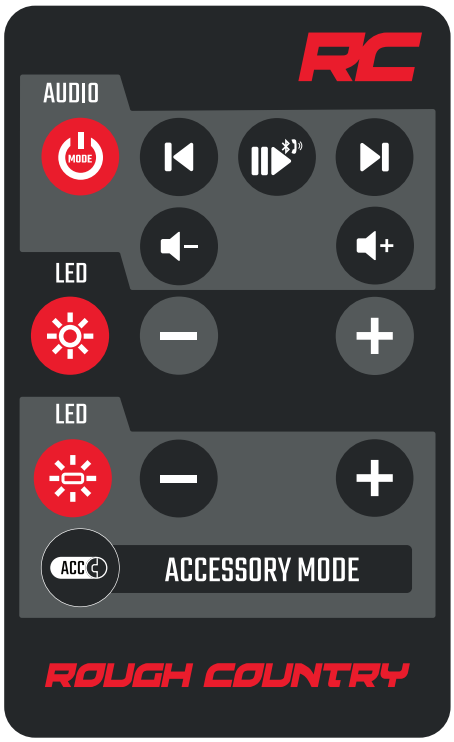




trailfortress.com/rough-country-bluetooth-led-soundbar-99515-a

# CONNECTING TWS SPEAKERS

**The Rough Country sound bar features TWS (True Wireless Stereo) technology, which allows the pairing of 2 speakers for true stereo listening. Follow instructions below to connect sound bar to a TWS compatible speaker.**

**Connect using TWS:**

1. On the sound bar, press and hold Bluetooth button (3s) to begin pairing mode. ”TWS Pair” voice prompt will sound.
2. Activate TWS feature on any compatible speaker. If connecting to another Reson8 sound bar, press and hold Bluetooth button (3s) for linking. Follow manufacturer instructions for pairing other devices with TWS feature.
3. Once the sound bar is connected, “TWS paired” voice prompt will sound.

**Disconnect TWS:**

1. On the sound bar, press and hold the Bluetooth button to disconnect speaker from TWS mode. ”TWS disconnected” voice prompt will sound.

**NOTE:**

TWS True Wireless Stereo is only available while in Bluetooth Mode (Blue LED Indicator), switching source from Bluetooth mode will automatically disconnect TWS speaker.

---

# CONNECTING USB FLASH DRIVE

**Below are steps for playing audio files from a flash drive using the USB port on the sound bar. Music mode is automatically activated when the flash drive is connected to the USB port and stored with compatible music files (MP3). The USB ports can also be used to charge compatible devices. However, it cannot be used to play audio from a mobile device.**

**Connect Flash Drive:**

1. With compatible music files stored, insert the flash drive to the USB port on the sound bar. Music mode will automatically be selected and “music” voice prompt will sound and play audio.
2. Press play/pause button to play or pause audio on the flash drive.
3. Press previous or skip buttons to navigate audio on the flash drive.

**Note:**

Music mode will not be available unless a flash drive, with compatible audio files, is properly connected to the USB port. If flash drive is connected and “music” voice prompt is not heard or red LED indicator is not shown, press mode Ⓜ to change source to USB music mode or check flash drive for compatible audio files.





trailfortress.com/rough-country-bluetooth-led-soundbar-99515-a

# SOUND BAR SPECS/DIMENSIONS

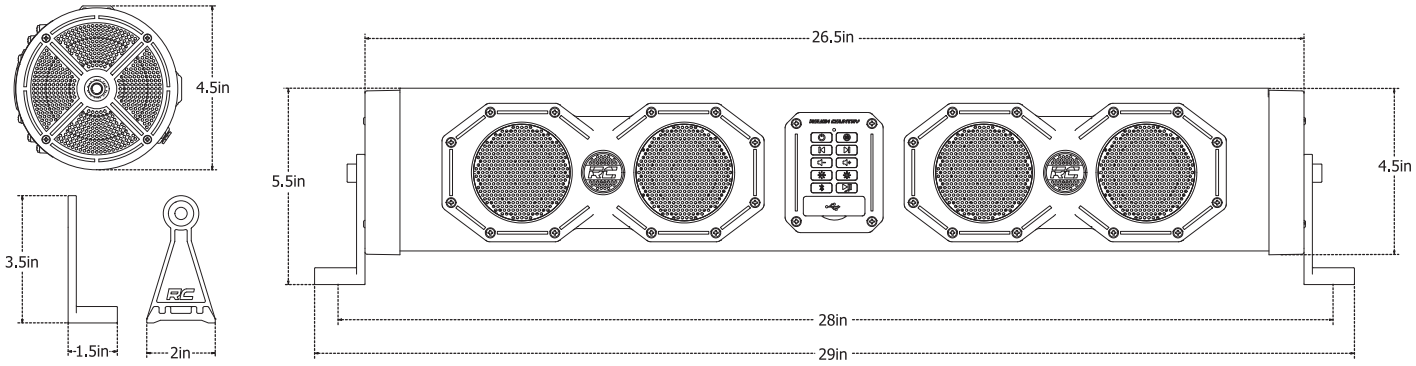


**Sound Bar:** 26.5 x 4.5 in | **Sound Bar and Brackets :** 29 x 5.5 in | **L-Brackets:** 3.5 x 2 x 1.5 in

**SPECIFICATIONS:**

| | |
|---|---|
| Bluetooth: V5.1 | TWS Range: 30ft/9.1m |
| Bluetooth Frequency: 2.4 GHz ISM spectrum band | Audio Output: 500-Watts |
| Bluetooth Range: 100ft/30m | Power Supply: 12V 10A Input |
| Bluetooth Compatibility: Bluetooth V1.1 or above | USB Output: 5V 2.1A |
| Tweeters (x2): 1-inch | FM Radio Frequency: FM 87.5-107.9 mHz |
| Woofers (x2): 3.5-inch | Storage Temperature: -40°F to 122°F / -5°C to 35°C |
| Mid-Range (x4): 2.5in | Waterproof and Dust Rating: IP66 |

# FCC STATEMENT

**Federal Communications Commission (FCC) statement | FCC ID: 2BE33-99515**
This equipment has been tested and found to comply with the limits for a Class A digital device, pursuant to Part 15 of the FCC Rules. These limits are designed to provide reasonable protection against harmful interference when the equipment is operated in a commercial environment. This equipment generates, uses, and can radiate radio frequency energy and, if not installed and used in accordance with the instruction manual, may cause harmful interference to radio communications. Operation of this equipment in a residential area is likely to cause harmful interference, in which case the user will be required to correct the interference at his own expense.

**WARNING:** Changes or modifications not expressly approved by the party responsible for compliance could void the user's authority to operate the equipment.

This device complies with Part 15 of the FCC Rules. Operation is subject to the following two conditions: (1) this device may not cause harmful interference, and (2) this device must accept any interference received, including interference that might cause undesired operation.

**RF Warning Statement:**
The device has been evaluated to meet general RF exposure requirement and can be used in portable exposure condition without restriction.

**California Proposition 65 Warning:**
This product contains chemicals known to the state of California to cause cancer and birth defects or other reproductive harm. For more information visit www.roughcountry.com/prop65 or www.p65warnings.ca.gov.



trailfortress.com/rough-country-bluetooth-led-soundbar-99515-a