TRAIL FORTRESS

BUILT FOR THE TRAIL. CHECKED FOR YOUR TRUCK.

Rough Country 99213 Installation Instructions

Aluminum MOLLE Panel Mounting Kit (Pair)

Part number: 99213

trailfortress.com/aluminum-molle-panel-mounting-kit-pair-rough-country-99213

Scan for fitment, price and install help

ROUGH COUNTRY
SUSPENSION SYSTEMS®

921992120

Universal Molly Cam Plates

Thank you for choosing Rough Country for all your vehicle needs.

Please read instructions before beginning installation. Check the kit hardware against the kit contents shown below. Be sure you have all needed parts and know where they go.
If question exist, please call us @1-800-222-7023. We will be happy to answer any questions concerning this product.
Check all fasteners for proper torque. Check to ensure for adequate clearance between all components.
Periodically check all hardware for tightness.

Kit Contents:
Molle Quick Mount Aluminum- Rear x1
Molle Quick Mount Aluminum- Front x1

Tools Needed:
4mm Allen Wrench

Hardware Included:
6MM-1.0 X 30MM BHCS x1
6MM-1.0 X 40MM BHCS x1
6MM-1.0 X 50MM BHCS x1
6mm Washers x3



Torque Specs:

Size	Grade 5	Grade 8	Size	Class 8.8	Class 10.9
5/16”	15 ft/lbs	20ft/lbs	6MM	5ft/lbs	9ft/lbs
3/8”	30 ft/lbs	35ft/lbs	8MM	18ft/lbs	23ft/lbs
7/16”	45 ft/lbs	60ft/lbs	10MM	32ft/lbs	45ft/lbs
1/2”	65 ft/lbs	90ft/lbs	12MM	55ft/lbs	75ft/lbs
9/16”	95 ft/lbs	130ft/lbs	14MM	85ft/lbs	120ft/lbs
5/8”	135ft/lbs	175ft/lbs	16MM	130ft/lbs	165ft/lbs
3/4”	185ft/lbs	280ft/lbs	18MM	170ft/lbs	240ft/lbs

INSTALLATION INSTRUCTIONS

1. Place one of the supplied button head Allen bolt through the base of the mount and through the front clamp. Place the assembly into the desired mounting location of the molly panel. **See Photo 1.**
2. Place the outer clamp to the back of the molly panel, threading the bolt into the clamp. **See Photo 2.**

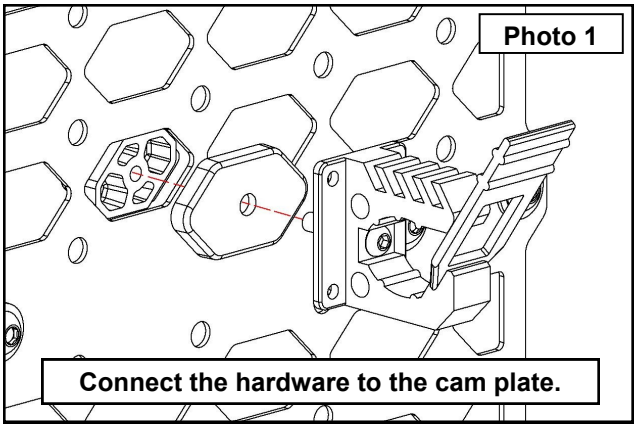

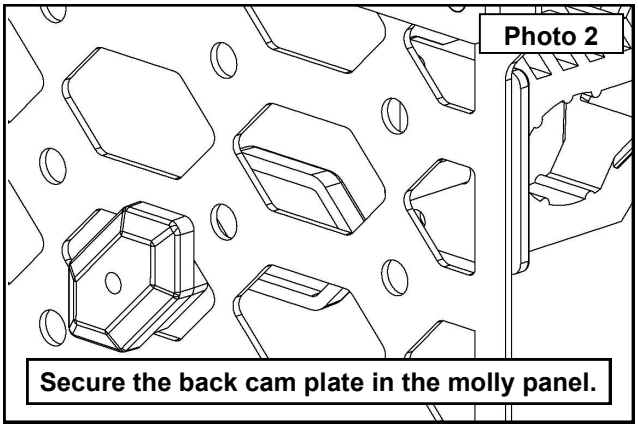

3. Use a Allen wrench to tighten the assembly. **See Photo 3.**

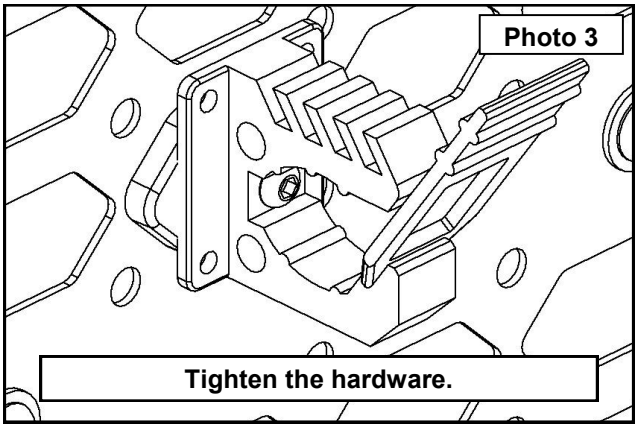

By purchasing any item sold by Rough Country, LLC, the buyer expressly warrants that he/she is in compliance with all applicable, State, and Local laws and regulations regarding the purchase, ownership, and use of the item. It shall be the buyers responsibility to comply with all Federal, State and Local laws governing the sales of any items listed, illustrated or sold. The buyer expressly agrees to indemnify and hold harmless Rough Country, LLC for all claims resulting directly or indirectly from the purchase, ownership, or use of the items.