TRAIL FORTRESS

BUILT FOR THE TRAIL. CHECKED FOR YOUR TRUCK.

Rough Country 99013 Installation Instructions

Universal Fire Extinguisher Mount for 2.5–3.5 in Roll Cage

Part number: 99013

trailfortress.com/rough-country-universal-fire-extinguisher-mount-99013

Scan for fitment, price and install help



Universal Fire Extinguisher Mount

Thank you for choosing Rough Country for all your vehicle needs.

Please read instructions before beginning installation. Check the kit hardware against the kit contents shown below. Be sure you have all needed parts and know where they go.
If question exist, please call us @1-800-222-7023. We will be happy to answer any questions concerning this product.
Check all fasteners for proper torque. Check to ensure for adequate clearance between all components.
Periodically check all hardware for tightness.

KIT CONTENTS:
Fire Extinguisher Mount x1
Small Hose Clamps x2
Large Hose Clamps x2

TOOLS NEEDED:
Flathead Screwdriver

INSTALLATION INSTRUCTONS

1. Install the Fire Extinguisher Mount on a round pipe where desired using the two small hose clamps. **See Photo 1**.
2. Install the Fire Extinguisher to the Mount using the two large hose clamps. **See Photo 2**.

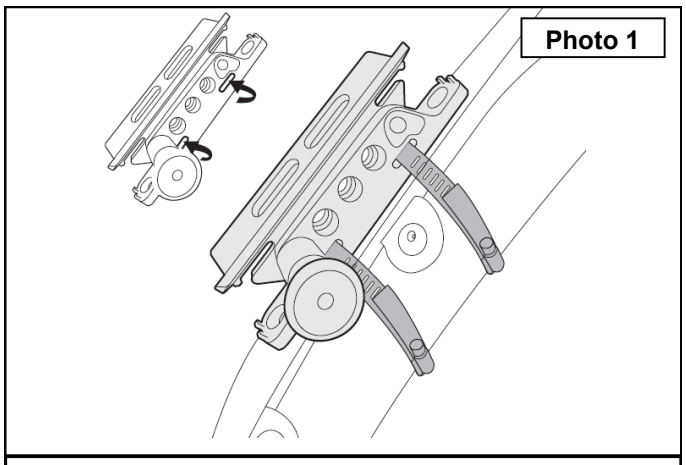

Install Mount on a round pipe with hose clamps.

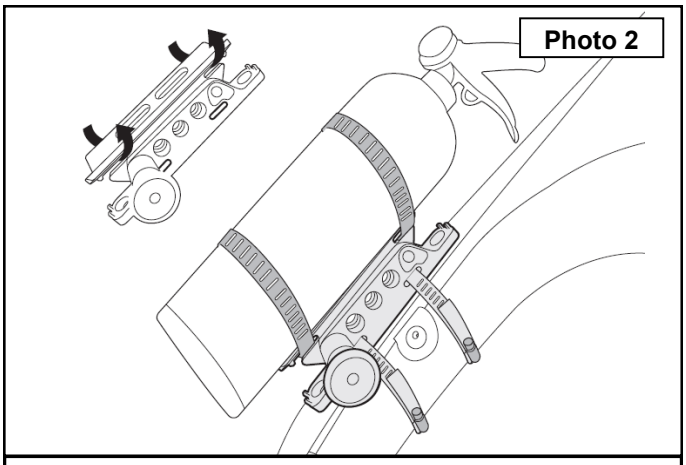

Install Extinguisher to mount using hose clamps

3. Note there are 2 holes for a flat mounting surface if desired. Hardware not included. **See Photo 3**.

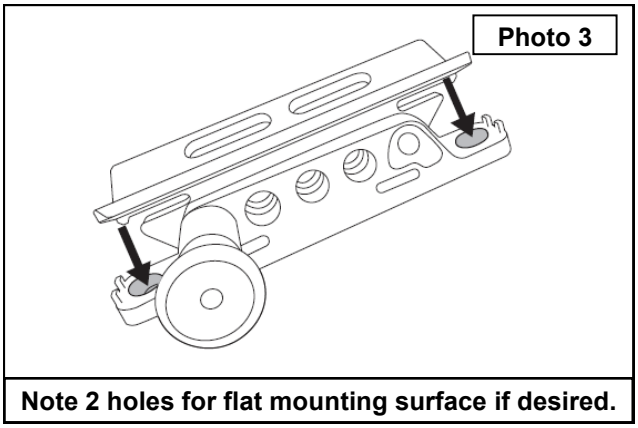

Note 2 holes for flat mounting surface if desired.

By purchasing any item sold by Rough Country, LLC, the buyer expressly warrants that he/she is in compliance with all applicable, State, and Local laws and regulations regarding the purchase, ownership, and use of the item. It shall be the buyers responsibility to comply with all Federal, State and Local laws governing the sales of any items listed, illustrated or sold. The buyer expressly agrees to indemnify and hold harmless Rough Country, LLC for all claims resulting directly or indirectly from the purchase, ownership, or use of the items.