TRAIL FORTRESS

BUILT FOR THE TRAIL. CHECKED FOR YOUR TRUCK.

Rough Country 93175 Installation Instructions

Center Console Storage Box with Tablet Holder for Polaris Ranger

Part number: 93175

trailfortress.com/center-console-storage-box-polaris-ranger-rough-country-93175

Scan for fitment, price and install help

BEFORE YOU BEGIN

1. Please read the instructions carefully and verify that each item is in the list.
2. Please retain these installation instructions for further reference and parts ordering information.

IMPORTANT

1. Please read the installation instructions carefully before you start.
2. If the vehicle is clean and free of other debris, it will be easy to install.
3. For your safety and to ensure a satisfactory installation, please complete all the installation steps in the order shown below.

Estimated installation time:
15 minutes

PRODUCT INFORMATION

①	Device Holder	x1
②	Push Pin	x2
③	Thick Foam Pad W10*H10*L1000mm	x1
④	Thin Foam Pad W20*H2*L800mm	x1

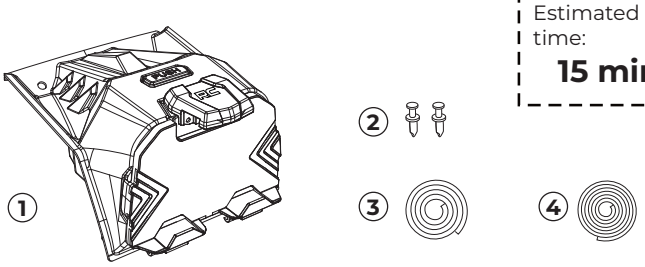

INSTALLATION TIPS

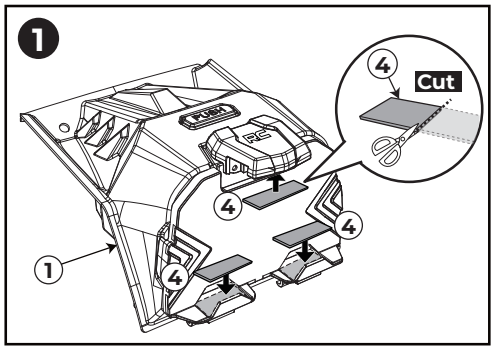

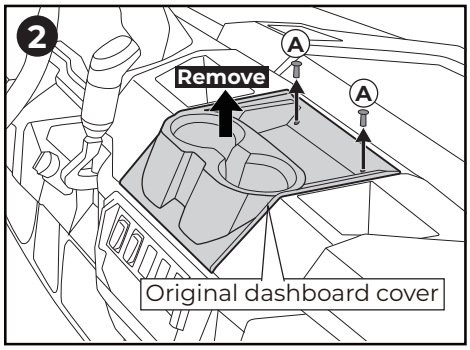

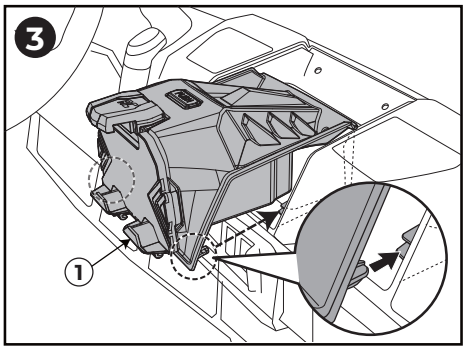

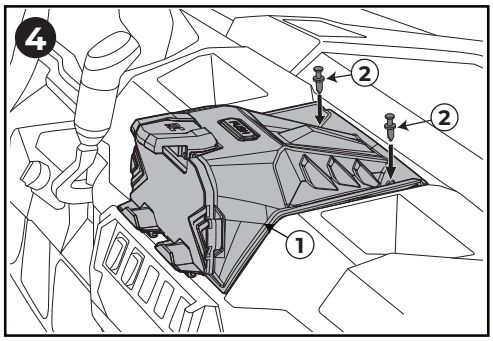

❶ Cut the suitable length. Stick the thin foam pads [4] to device holder [1] as shown.
(NOTE: The thick foam pad [3] is a spare part for small size devices.)
❷ Remove original factory dashboard cover by removing two push pins [A].
❸ Parallelly slide the device holder [1] into two slots on center dash inner wall.
❹ Install the device holder [1] to vehicle with two push pins [2].

FUNCTION DESCRIPTION

1. Press button [B] and open the device holder [1].
2. Loosen the thumb screw [C], then you can adjust the height of the claw [D] to fit different size of devices.
Tighten the screw [C] after finishing adjustment.

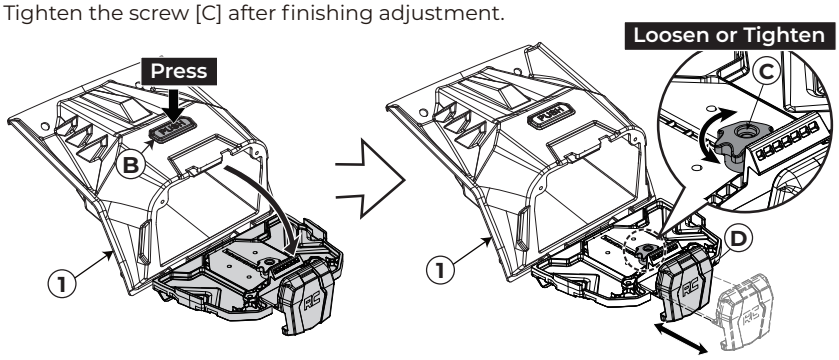

NOTE: After closing the device holder [1].

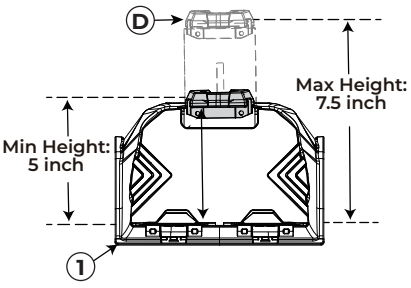

trailfortress.com/center-console-storage-box-polaris-ranger-rough-country-93175