TRAIL FORTRESS

BUILT FOR THE TRAIL. CHECKED FOR YOUR TRUCK.

Rough Country 93002 Installation Instructions

2-Foot LED Light Whip Kit: Pair with Wireless Remote

Part number: 93002

trailfortress.com/rough-country-led-light-whip-kit-93002

Scan for fitment, price and install help

929300400

ROUGH COUNTRY
SUSPENSION SYSTEMS®

Rough Country Multi-color LED Whip

Thank you for choosing Rough Country for all your vehicle needs.

Please read instructions before beginning installation. Check the kit hardware against the kit contents shown below. Be sure you have all needed parts and know where they go.
If question exist, please call us @1-800-222-7023. We will be happy to answer any questions concerning this product.
Check all fasteners for proper torque. Check to ensure for adequate clearance between all components.
Periodically check all hardware for tightness.

NOTE: It is recommended to install this kit on a 12V switched circuit to maintain battery strength

KIT CONTENTS:
RBG Whip Light x2
Wiring Harness x1
Remote x1
Flag x2
Carabiner Hook x4
Flag Mounts x4
Flag mount keeper x4

TOOLS NEEDED:
19mm Wrench or Socket

HARDWARE INCLUDED:
Lock Washer x2
Flat Washer x2
Nut x2
Flag Hardware
Bolts x4
Nuts x4



Torque Specs:

Size	Grade 5	Grade 8	Size	Class 8.8	Class 10.9
5/16”	15 ft/lbs	20ft/lbs	6MM	5ft/lbs	9ft/lbs
3/8”	30 ft/lbs	35ft/lbs	8MM	18ft/lbs	23ft/lbs
7/16”	45 ft/lbs	60ft/lbs	10MM	32ft/lbs	45ft/lbs
1/2”	65 ft/lbs	90ft/lbs	12MM	55ft/lbs	75ft/lbs
9/16”	95 ft/lbs	130ft/lbs	14MM	85ft/lbs	120ft/lbs
5/8”	135ft/lbs	175ft/lbs	16MM	130ft/lbs	165ft/lbs
3/4”	185ft/lbs	280ft/lbs	18MM	170ft/lbs	240ft/lbs

INSTALLATION INSTRUCTONS

- Proper installation of this product requires the installer to have a good understanding of the automotive electronics, systems, and procedures.
- If mounting this product requires drilling holes, the installer MUST be sure that no vehicle components or other vital parts could be damaged by the drilling process. Check both sides of the mounting surface before drilling begins. Also de-burr any holes and remove any metal shards or remnants. Install grommets into all wire passage holes.
- If this manual states that this product may be mounted with suction cups, magnets, tape or Velcro, clean the mounting surface and dry thoroughly prior to apply adhesive for maximum adhesion.
- Do not attempt to activate or control this device in a hazardous driving situation.
- Do not install this product or route any wires in the deployment area of any air bag. Equipment mounted or located in the air bag deployment area will damage or reduce the effectiveness of the air bag, or become a projectile that could cause serious personal injury or death. Refer to your vehicle owner's manual for the air bag deployment area. The User/installer assumes full responsibility to determine proper mounting location, based on providing ultimate safety to all passengers inside the vehicle.
- This product contains either strobe light(s), halogen light(s), high-intensity LEDs or a combination of these lights. Do not stare directly into these lights. Momentary blindness and/or eye damage could result.

Mounting:

- **CAUTION!** *Permanent mounting of this product will require drilling. It is absolutely necessary to make sure that no other vehicle components could be damaged by this process. Check both sides of the mounting surface before starting. If damage is likely, select a different mounting location.*

1. Disassemble the two parts of the quick disconnect mounting base by sliding the quick disconnect band "UP" to release the locking mechanism. **See Photo 1.**
2. Remove the flat washer, lock washer and the nut from the quick disconnect mounting base bolt. **See Photo 2.**
3. Select the desired mounting location. Check both sides of the mounting surface location.

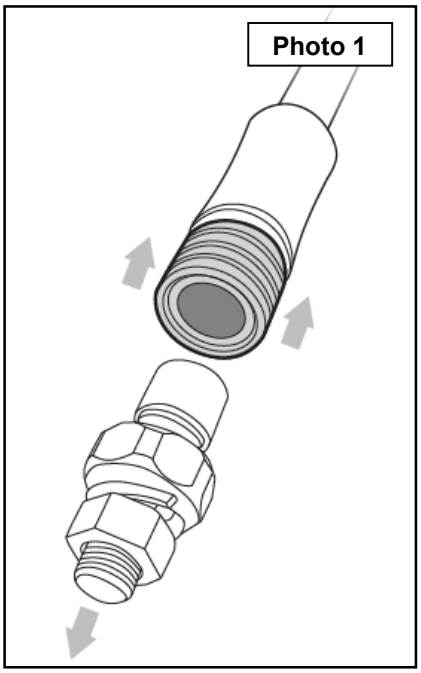

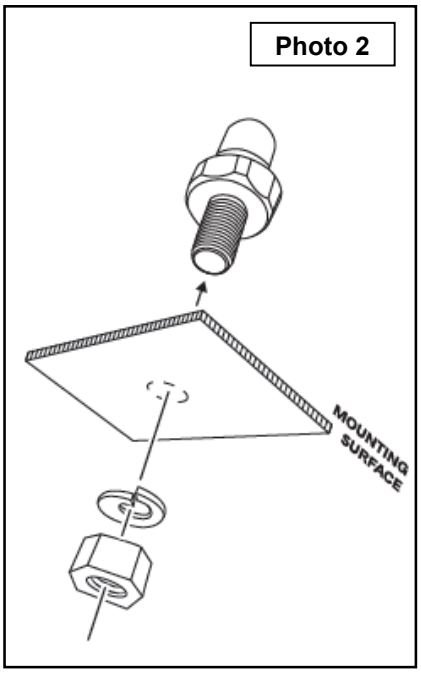

4. Mark the area where the mounting hole is to be drilled. Confirm that no vehicle parts could be damaged by the drilling process.
5. Use a drill bit of the appropriate size, drill a mounting hole for the Mounting bolt. Thoroughly de-burr the drilled hole on the top and bottom side.
6. Secure the mounting base onto the mounting surface using the included mounting bolt, flat washer, lock washer and nut and tighten. *Refer to **Photo 2** for installation*.

7. Install the LED whip onto the quick disconnect mount that has been installed, slide the base of the LED whip “UP’ and slide the LED whip onto the base locking the base securing the LED whip. **See Photo 3.**
8. Attach the included Flag to the LED whip using the supplied hardware. **See Photo 4.**

Photo 3

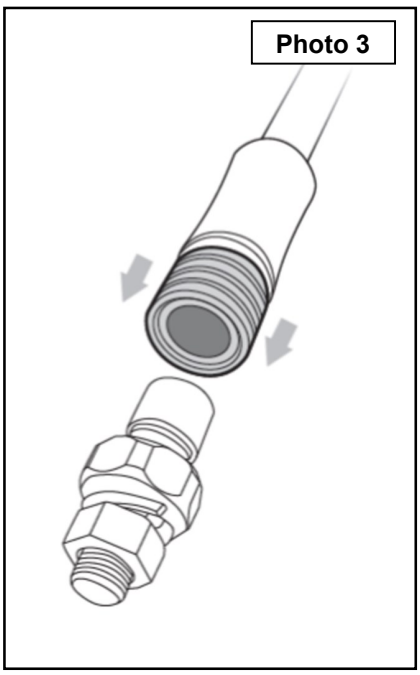

Photo 4

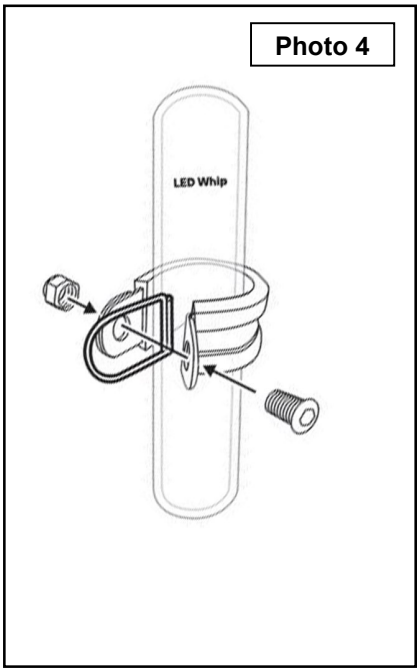

9. We recommend keeping the flag taut using the included carabiner hook. This will result in less rattling of the hardware and promote optimal flattering of the flag as the automobile is set in motion. **See Photo 5.**

Wiring:
WARNING! All customer supplied wires that connect to the positive terminal to the battery must be sized to supply at least 125% of the maximum operating current and FUSED at the battery to carry that load.

- **RED–** To 12V switched power Source. **Note:** It is highly recommended to install this product to a switch to avoid loss of voltage when the vehicle is turned off and not running.
- **Black–** To Chassis Ground.

Photo 5

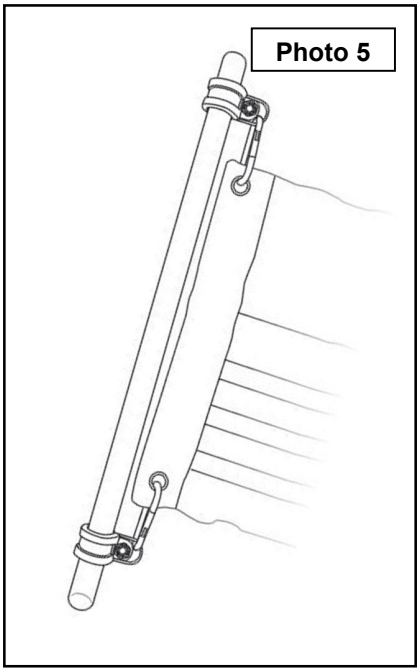

RBG Spiral LED Whip Controller

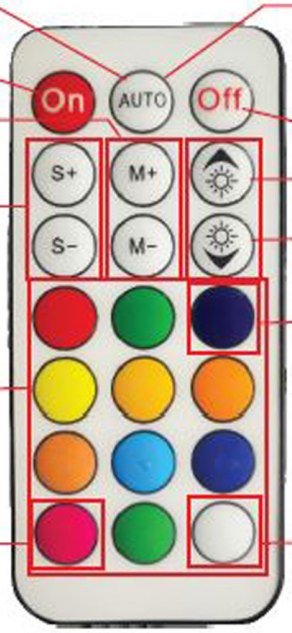

In the off state, press this button to enter the setup menu, then press the M+ or M– to adjust LED pixels. Press the blue button to adjust the RGB sequence. After complete setting, press OFF to save/exit.

Auto play

Power / Play pause

366 kinds mode switching
M+: Mode +

Shutdown
Auto save when shutdown

Brightness +
Brightness adjustment (32 levels)
Brightness -

10 levels speed adjust
S+: Speed +
S -: Speed -

RGB sequence adjustment function. In the state of shutdown, press the AUTO to enter the setup menu. Now, the first three lights of LED strip display the current RGB sequence. Press this button to adjust the RGB sequence until the sequence of the previous three lights are red, green and blue. Then press OFF button to save.

Monochrome Display
Press these buttons, light strip displays its corresponding colors.

Press 5 seconds, remote controls are one to one matching (only this remote control can control it) (This feature is available only for the RF version)

Press 5 seconds to cancel the remote control matching. All remote controls can control it (This feature is available only for the RF version)

By purchasing any item sold by Rough Country, LLC, the buyer expressly warrants that he/she is in compliance with all applicable, State, and Local laws and regulations regarding the purchase, ownership, and use of the item. It shall be the buyers responsibility to comply with all Federal, State and Local laws governing the sales of any items listed, illustrated or sold. The buyer expressly agrees to indemnify and hold harmless Rough Country, LLC for all claims resulting directly or indirectly from the purchase, ownership, or use of the items.