TRAIL FORTRESS

BUILT FOR THE TRAIL. CHECKED FOR YOUR TRUCK.

Rough Country 9265 Installation Instructions

1.5-Inch Leveling Kit for Ford F-150 & Bronco (1980-1996)

Part number: 9265

trailfortress.com/1-5-inch-leveling-kit-ford-f150-bronco-rough-country-9265

Scan for fitment, price and install help



92926400

Rough Country recommends this system be installed by a certified technician. In addition to these instructions, professional knowledge of disassemble/reassembly procedures as well as post installation checks must be known. Attempts to install this system without this knowledge and expertise may jeopardize the integrity and/or operating safety of the vehicle.

Please read instructions before beginning installation. Be sure you have all needed parts and know where they go.

With the installation of all lift kits and larger tires it is important to check the condition of your steering stabilizer. If the stabilizer is worn or is leaking it should be replaced. Steering stabilizers are designed to restrain “bump steering” and front end vibration, giving added life to tires, ball joints, and other steering components. A multiple stabilizer kit is recommended for vehicles equipped with a snow plow, winch, or larger tires

PRODUCT USE INFORMATION

As a general rule, the taller a vehicle is, the easier it will roll. Offset, as much as possible, what is lost in rollover resistance by increasing tire track width. In other words, go "wide" as you go "tall". Many sportsmen remove their mud tires after hunting season and install ones more appropriate for street driving; always use as wide a tire and wheel combination as possible to enhance vehicle stability.
We strongly recommend, because of rollover possibility, that seat belts and shoulder harnesses should be worn at all times. Avoid situations where a side rollover may occur
Generally, braking performance and capability are decreased when significantly larger/heavier tires and wheels are used. Take this into consideration while driving.
Do not add, alter, or fabricate any factory or after-market parts to increase vehicle height over the intended height of the Rough Country product purchased. Mixing component brands is not recommended.
Rough Country makes no claims regarding lifting devices and excludes any and all implied claims. We will not be responsible for any product that is altered.

If question exist we will be happy to answer any questions concerning the design, function, and correct use of our products.

NOTICE TO DEALER AND VEHICLE OWNER

Any vehicle equipped with any Rough Country product should have a “Warning to Driver” decal installed on the inside of the windshield or on the vehicle’s dash. The decal should act as a constant reminder for whoever is operating the vehicle of its unique handling characteristics.
INSTALLING DEALER - it is your responsibility to install the warning decal and forward these installation instructions on to the vehicle owner for review. These instructions should be kept in the vehicle for its service life.

INSTALLATION INSTRUCTIONS

1. Place floor jack under the puter ends of both axle halves and evenly raise the vehicle approximately 12”. Place jack stands under frame rails approximately 4” behind the radius arm brackets. Ease vehicle down onto stands. Continue down with jacks until there is only a slight load on the coil spriings. Remove tires. If existing shocks are to be reused, unbolt the bottom only; if replacements are to be installed , remove completely.
2. Perform coil spring removal and reinstallation one side at a time. Remove the spring tower retaining nut and washer, then ease the axle down and away from the coil.
   MID-SIZE-The upper coil end will now “unscrew” from the spring tower prongs.
   FULL-SIZE-Remove the upper coil spring retaining clip to allow spring removal

trailfortress.com/1-5-inch-leveling-kit-ford-f150-bronco-rough-country-9265

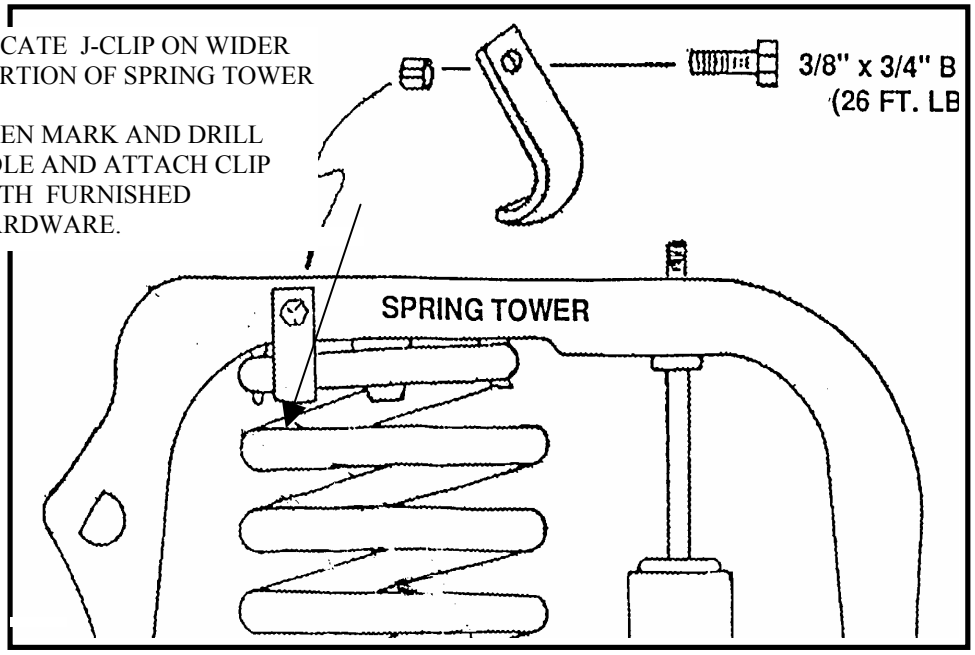

3. Install new coil spring. Be sure the bottom of the coil is centered prior to tightening nut/washer. Tighten to 130 ft/lbs. **MID-SIZE-**The spring tower prongs must be reformed to wrap around the top coil of the spring. Refer to the diagram for-Clip installation. **FULL-SIZE-**Position and tighten the upper coil spring retaining clip. Torque to 13-18 ft/lbs
4. Rebolt lower end of shock. Torque to 42-72 ft/lbs. If shock is replaced, tighten upper nut only until busings swells slightly.
5. Repeat steps 2-4 on opposite side.
6. Recheck every nut/bolt that has been touched for proper torque. Install tires and lower vehicle to ground.
7. Have headlights readjusted to proper setting.

ALIGNMENT

Alignment should be performed by a reputable shop familiar with the IFS. Keeping the tires pointing straight ahead, pull the vehicle forward and rearward(approximately 15-25 ft.) a few times; this will seat the front axle/steering assembly.

TOE-IN: 1/32- A temporary setting may be required before driving to the alignment shop.
CAMBER: Initial driver's side-7/8 degrees to 5/8 degrees positive
Initial passenger side-5/8 degrees to ½ degrees positive
With spring settling you can expect to lose apprx. ¼ degree of camber which will give you an ideal reading.

CASTER: Preferred caster varies from one model to the next. On most models, caster is m\non-adjustable.
MAXIMUM SIDE TO SIDE VARIATIONS: Caster, 1 ½ degrees
Camber, 23/32 degrees

POST INSTALLATION INSTRUCTIONs

1. Check all fasteners for proper torque. Check to ensure there is adequate clearance between all rotating, mobile, fixed and heated members. Check steering gear for interference and proper working order. Test brake system.
2. Perform steering sweep. Check to ensure brake hoses have sufficient slack and will not contact rotating, mobile, or fixed members, adjust lines/brackets to eliminate interference and maintain proper working order. Failure to perform inspections may result in component failure.
3. Bump stops and extensions must be in place on all vehicles! Note: allowing suspension to over extend by neglecting to install or maintain stops and extensions may cause serious damage to OE and related components.
4. Re torque all fasteners after 500 miles. Visually inspect components and re torque fasteners during routine vehicle service.

MAINTENANCE INFORMATION

It is the ultimate buyers responsibility to have all bolts/nuts checked for tightness after the first 100 miles and then every 1000 miles. Wheel alignment steering system, suspension and driveline systems must be inspected by a qualified professional mechanic at least every 3000 miles.

trailfortress.com/1-5-inch-leveling-kit-ford-f150-bronco-rough-country-9265