TRAIL FORTRESS

BUILT FOR THE TRAIL. CHECKED FOR YOUR TRUCK.

Rough Country 92016 Installation Instructions

6-Inch Black Series LED Light Bar Kit for Honda Foreman (2020-2024)

Part number: 92016

trailfortress.com/rough-country-led-light-kit-92016

Scan for fitment, price and install help



HONDA 2019 Foreman 6” LED Rack Mount

Thank you for choosing Rough Country for all your vehicle needs.

Please read instructions before beginning installation. Check the kit hardware against the kit contents shown below. Be sure you have all needed parts and know where they go.
If question exist, please call us @1-800-222-7023. We will be happy to answer any questions concerning this product.
Check all fasteners for proper torque. Check to ensure for adequate clearance between all components.
Periodically check all hardware for tightness.

KIT CONTENTS:
6” Single Row LED Light Kit x1
Right Side Bracket x1
Left Side Bracket x1

TOOLS NEEDED:
12mm Wrench and Socket



Torque Specs:

Size	Grade 5	Grade 8	Size	Class 8.8	Class 10.9
5/16”	15 ft/lbs	20ft/lbs	6MM	5ft/lbs	9ft/lbs
3/8”	30 ft/lbs	35ft/lbs	8MM	18ft/lbs	23ft/lbs
7/16”	45 ft/lbs	60ft/lbs	10MM	32ft/lbs	45ft/lbs
1/2”	65 ft/lbs	90ft/lbs	12MM	55ft/lbs	75ft/lbs
9/16”	95 ft/lbs	130ft/lbs	14MM	85ft/lbs	120ft/lbs
5/8”	135ft/lbs	175ft/lbs	16MM	130ft/lbs	165ft/lbs
3/4”	185ft/lbs	280ft/lbs	18MM	170ft/lbs	240ft/lbs

INSTALLATION INSTRUCTONS

1. Remove the (2) front mounting bolts in the front rack using a 12mm wrench retain hardware. **See Photo 1.**
2. Locate the 2 light mount brackets, **NOTE:** *The right side mounting will have a notch on the rear of the bracket.* **See Photo 2.**

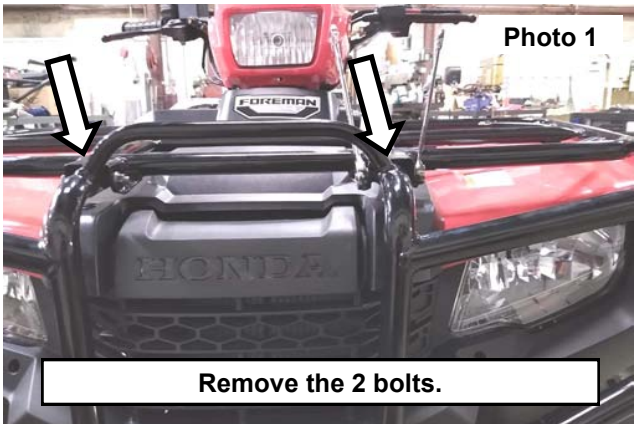

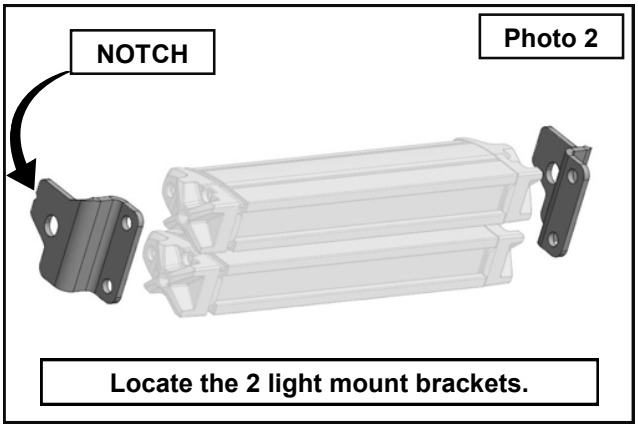

3. Install the right and left brackets onto the (2) single row lights using the supplied mounting hardware in the light bar kit. **See Photo 3.**
4. Attach the assembly to the rack using the retained hardware. Tighten using a 12mm wrench. **See Photo 4.**
5. Install the wiring harness using the corresponding instruction sheet supplied with the light bar kit.
6. Connect the light bar assembly to the wiring harness.

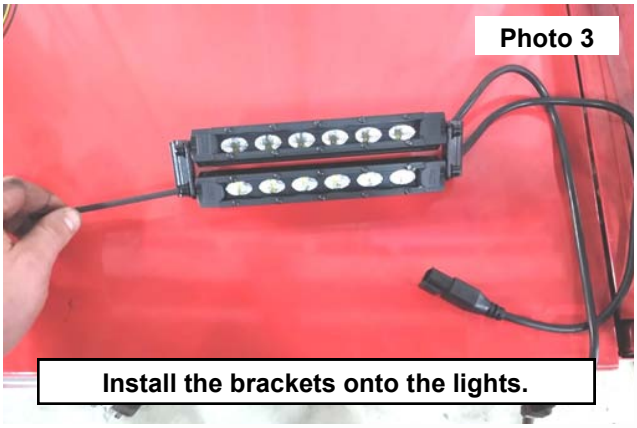





By purchasing any item sold by Rough Country, LLC, the buyer expressly warrants that he/she is in compliance with all applicable, State, and Local laws and regulations regarding the purchase, ownership, and use of the item. It shall be the buyers responsibility to comply with all Federal, State and Local laws governing the sales of any items listed, illustrated or sold. The buyer expressly agrees to indemnify and hold harmless Rough Country, LLC for all claims resulting directly or indirectly from the purchase, ownership, or use of the items.