TRAIL FORTRESS

BUILT FOR THE TRAIL. CHECKED FOR YOUR TRUCK.

Rough Country 90761 Installation Instructions

Contoured Drop Steps for 2-Door Jeep Wrangler 4WD (2018-2025)

Part number: 90761

trailfortress.com/rough-country-contoured-drop-steps-90761

Scan for fitment, price and install help

921907610

JEEP 2018-19 JL 2-Door XL2 Drop Steps

Thank you for choosing Rough Country for all your vehicle needs.

Please read instructions before beginning installation. Check the kit hardware against the kit contents shown below. Be sure you have all needed parts and know where they go.
If question exist, please call us @1-800-222-7023. We will be happy to answer any questions concerning this product.
Check all fasteners for proper torque. Check to ensure for adequate clearance between all components.
Periodically check all hardware for tightness.

KIT CONTENTS:
Driver Side Main Step Rail x1
Pass Side Main Step Rail x1
Pinch Weld Brackets x4
Step Brackets x4

TOOLS NEEDED:
10mm wrench or Socket
13mm wrench and socket
Rachet

HARDWARE INCLUDED:
8mm x 20mm Hex Head Bolts x8
8mm x 25mm Hex Head Bolts x12
8mm x 35mm Hex Head Bolts x4
8mm Flat Washer x24
8mm Lock Washer x12
8mm Flange Lock Nut x8



Torque Specs:

Size	Grade 5	Grade 8	Size	Class 8.8	Class 10.9
5/16”	15 ft/lbs	20ft/lbs	6MM	5ft/lbs	9ft/lbs
3/8”	30 ft/lbs	35ft/lbs	8MM	18ft/lbs	23ft/lbs
7/16”	45 ft/lbs	60ft/lbs	10MM	32ft/lbs	45ft/lbs
1/2”	65 ft/lbs	90ft/lbs	12MM	55ft/lbs	75ft/lbs
9/16”	95 ft/lbs	130ft/lbs	14MM	85ft/lbs	120ft/lbs
5/8”	135ft/lbs	175ft/lbs	16MM	130ft/lbs	165ft/lbs
3/4”	185ft/lbs	280ft/lbs	18MM	170ft/lbs	240ft/lbs

INSTALLATION INSTRUCTONS

1. If equipped remove the factory step from the vehicle using a 10mm wrench on the pinch weld studs and a 13mm on the bolts on the bottom of the mount. **See Photo 1.** Retain the bottom bolts from each side.
2. Locate the step brackets shown in **Photo 2.**

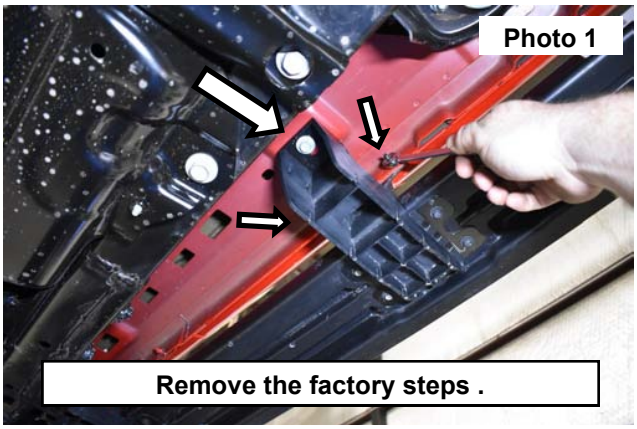

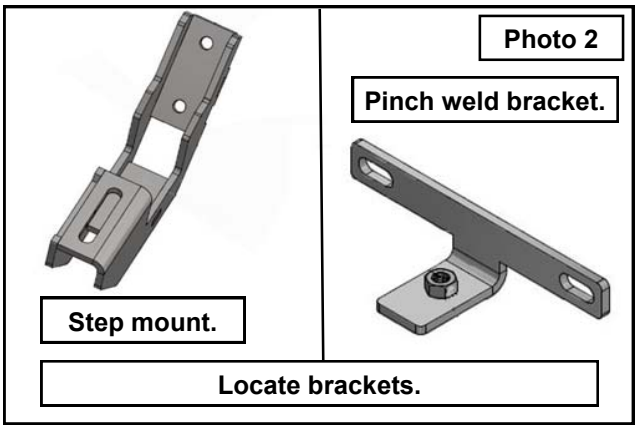

3. Install the pinch weld bracket into the step mount and secure using (1) of the supplied 8mm x 25mm bolt, (1) 8mm lock washer and (1) 8mm flat washer. Do not tighten the bolt . **See Photo 3.**
4. Install each bracket onto the step using (2) of the supplied 8mm x 20mm bolts, (2) 8mm lock washers and (2) 8mm flat washers. **See Photo 4.**

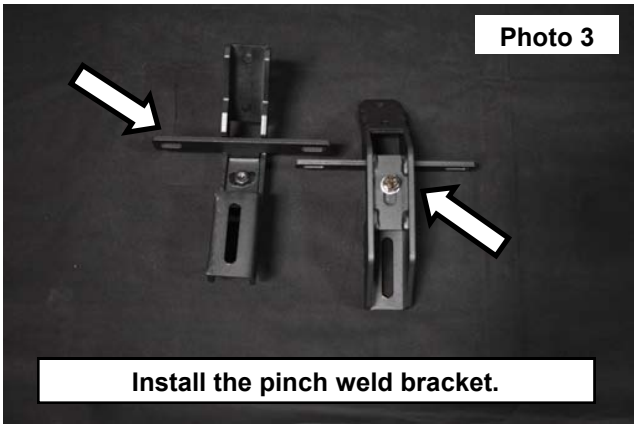

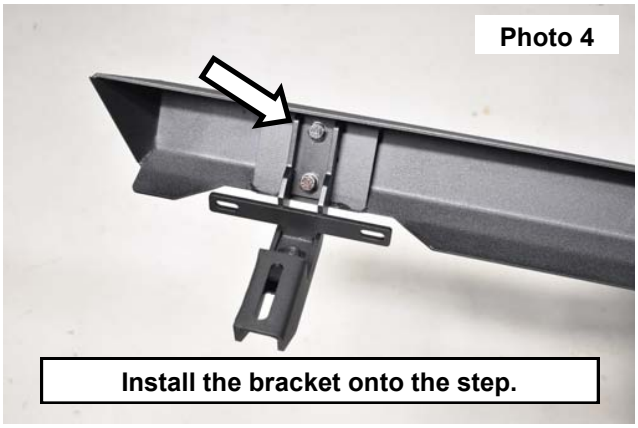

5. Tighten the bracket to the step using a 13mm socket. **See Photo 5.**
6. Install the step onto the vehicle. Skip to step 7 if not using the OE hardware. If reusing the OE 8mm bolts install them in the cab mounts at this time.
7. If using the supplied hardware, use (2) 8mm x 35mm bolts and (2) flat washers. Install the pinch weld bracket hardware using (4) 8mm x 25mm bolts (4) flat washers and (4) flange nuts. **See Photo 6.**



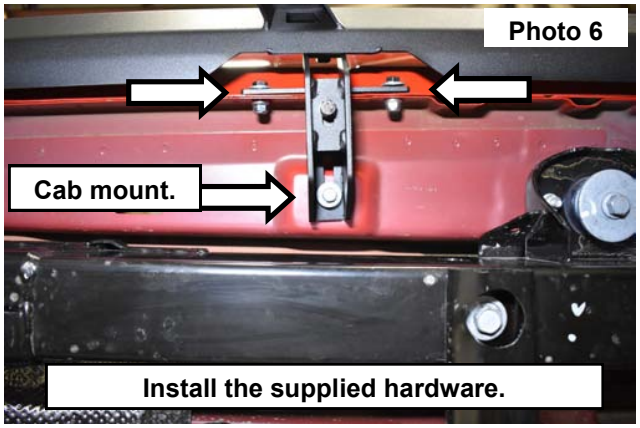

8. Align the gap between the edge of the step and the lower body of the vehicle then tighten the pinch weld brackets to the step bracket to set the gap. Using a 13mm socket. **See Photos 7 and 8.**

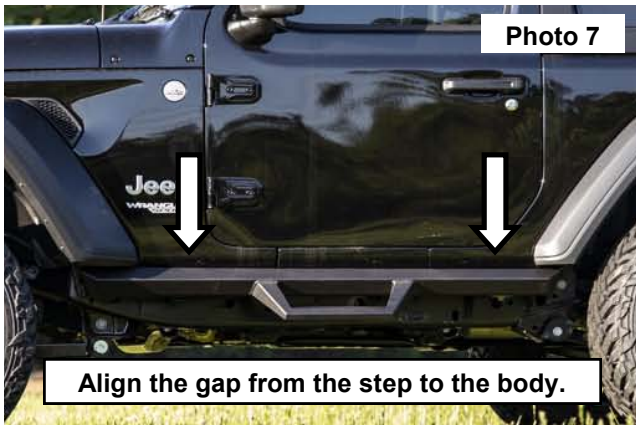

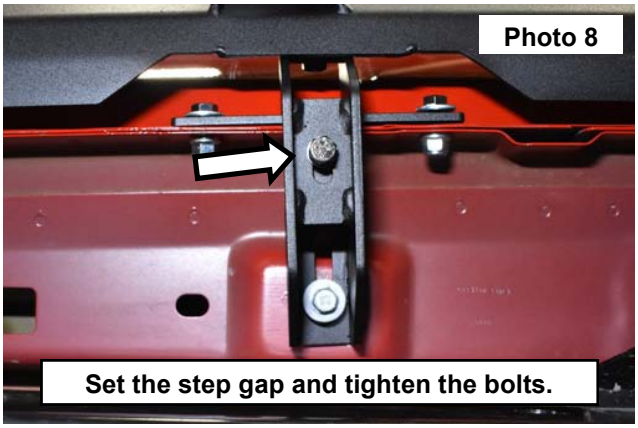

9. Tighten the pinch weld bracket and the cab bolts using a 13mm socket and wrench. **See photo 9.**
10. Repeat steps 1-10 on the opposite side of the vehicle.
11. Periodically check all hardware for tightness.

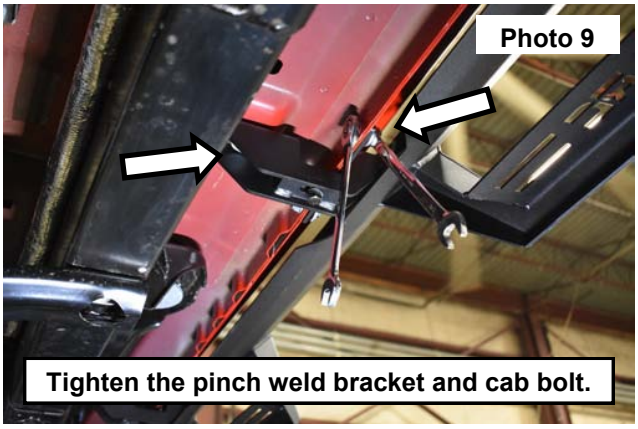



By purchasing any item sold by Rough Country, LLC, the buyer expressly warrants that he/she is in compliance with all applicable, State, and Local laws and regulations regarding the purchase, ownership, and use of the item. It shall be the buyers responsibility to comply with all Federal, State and Local laws governing the sales of any items listed, illustrated or sold. The buyer expressly agrees to indemnify and hold harmless Rough Country, LLC for all claims resulting directly or indirectly from the purchase, ownership, or use of the items.