Rough Country 734074 Installation Instructions

Bed Cap MOLLE Panel Side Storage Bin for 2024–2025 Toyota Tacoma

Part number: 734074

trailfortress.com/rough-country-bed-cap-molle-panel-side-storage-bin-734074

Scan for fitment, price and install help

ROUGH COUNTRY

Driver Side Bed Cap Storage Box W/Molle

Thank you for choosing Rough Country for all your vehicle needs.

Please read instructions before beginning installation. Check the kit hardware against the kit contents shown below. Be sure you have all needed parts and know where they go.

If question exist, please call us @1-800-222-7023. We will be happy to answer any questions concerning this product.

Check all fasteners for proper torque. Check to ensure for adequate clearance between all components. Periodically check all hardware for tightness.

Care and Cleaning

- Mild soap may be used also to clean the Product.
- Periodically check hardware for tightness.

Components

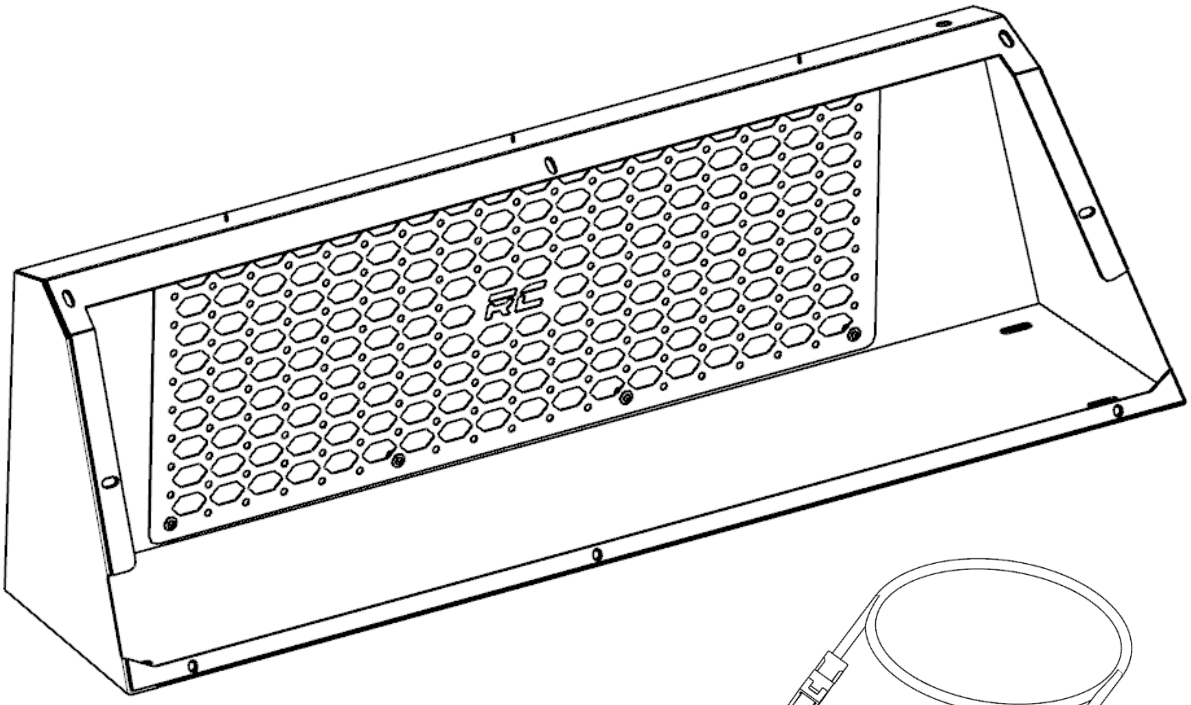

Insert w/molle panel for driver side

LED Light Wire Harness X1

trailfortress.com/rough-country-bed-cap-molle-panel-side-storage-bin-734074

Hardware Kits

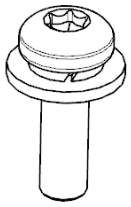

6mmx20mm Combo Kits X8

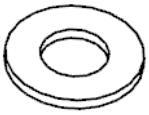

6mm Plastic Flat Washers X8

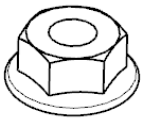

6mm Flange Nuts X8

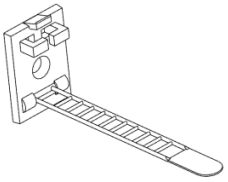

Zip Ties X10

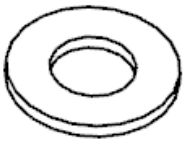

6mm Steel Flat Washers X8

Tools



10mm Wrench

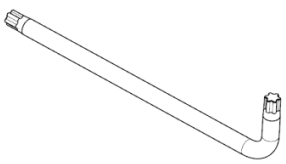

Hex Wrench

trailfortress.com/rough-country-bed-cap-molle-panel-side-storage-bin-734074

STEP 1

Open the DS Side Door, PS Side Door, Rear Frame Door and lower the tailgate of the truck.

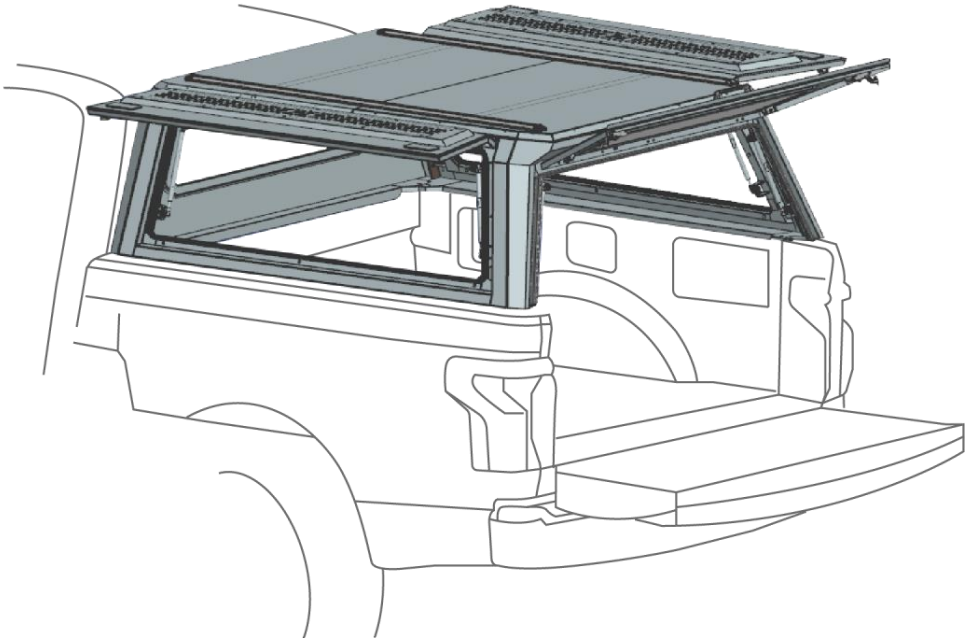

STEP 2

Pull off the small rubber plugs on the DS Side Door.

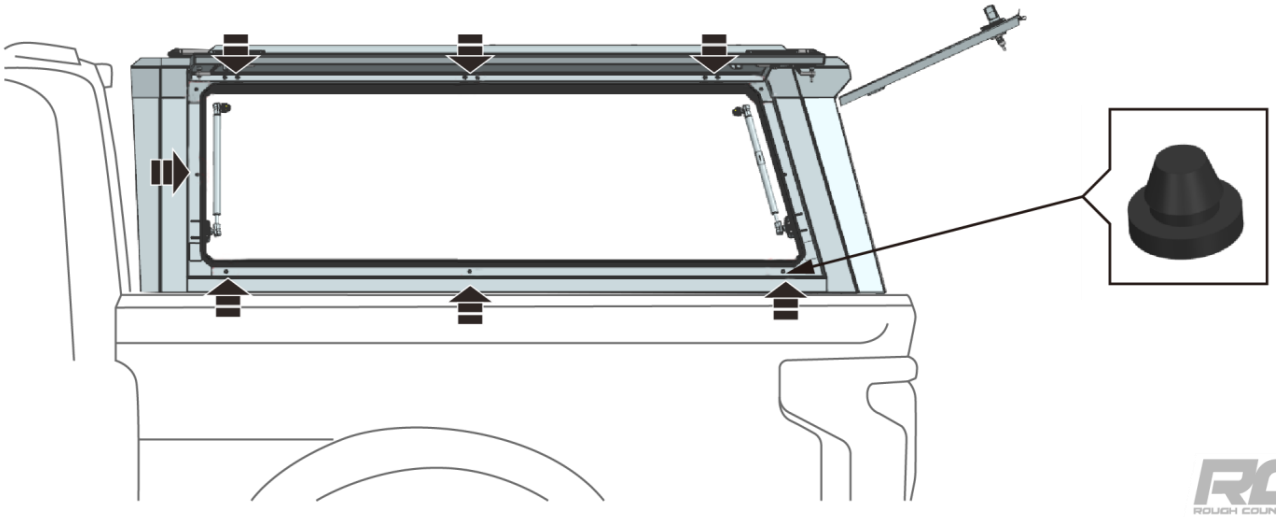

trailfortress.com/rough-country-bed-cap-molle-panel-side-storage-bin-734074

STEP 3

Place the DS storage box from the rear into the bed of the vehicle.

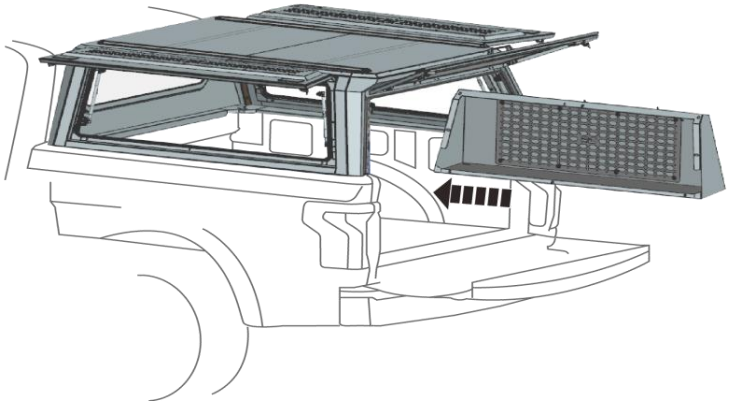

STEP 4

Align the holes on the storage box with the holes on the DS Side Door, and secure with 6 mm x 20 mm bolts, flat washers and flange nuts. (8 in total).

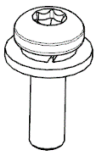

6mmx20mm Combo Kits X8

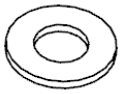

6mm Plastic Flat Washers X8

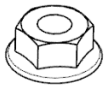

6mm Flange Nuts X8

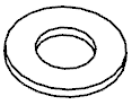

6mm Steel Flat Washers X8

\

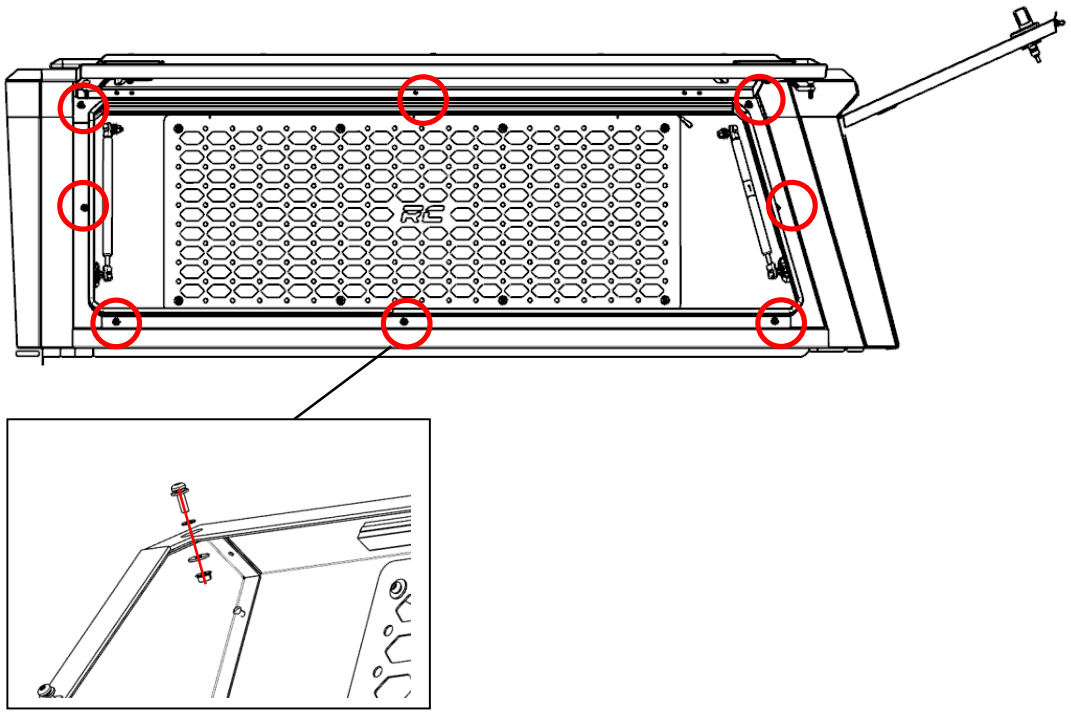

trailfortress.com/rough-country-bed-cap-molle-panel-side-storage-bin-734074

STEP 5

Connect the plug on the light strip to the plug on the wiring harness, and then secure the wiring harness along the top of the canopy with zip ties. Connect the other end of the wiring harness plug previously installed with the bed cap to the plug labeled with “storage” on the switch.

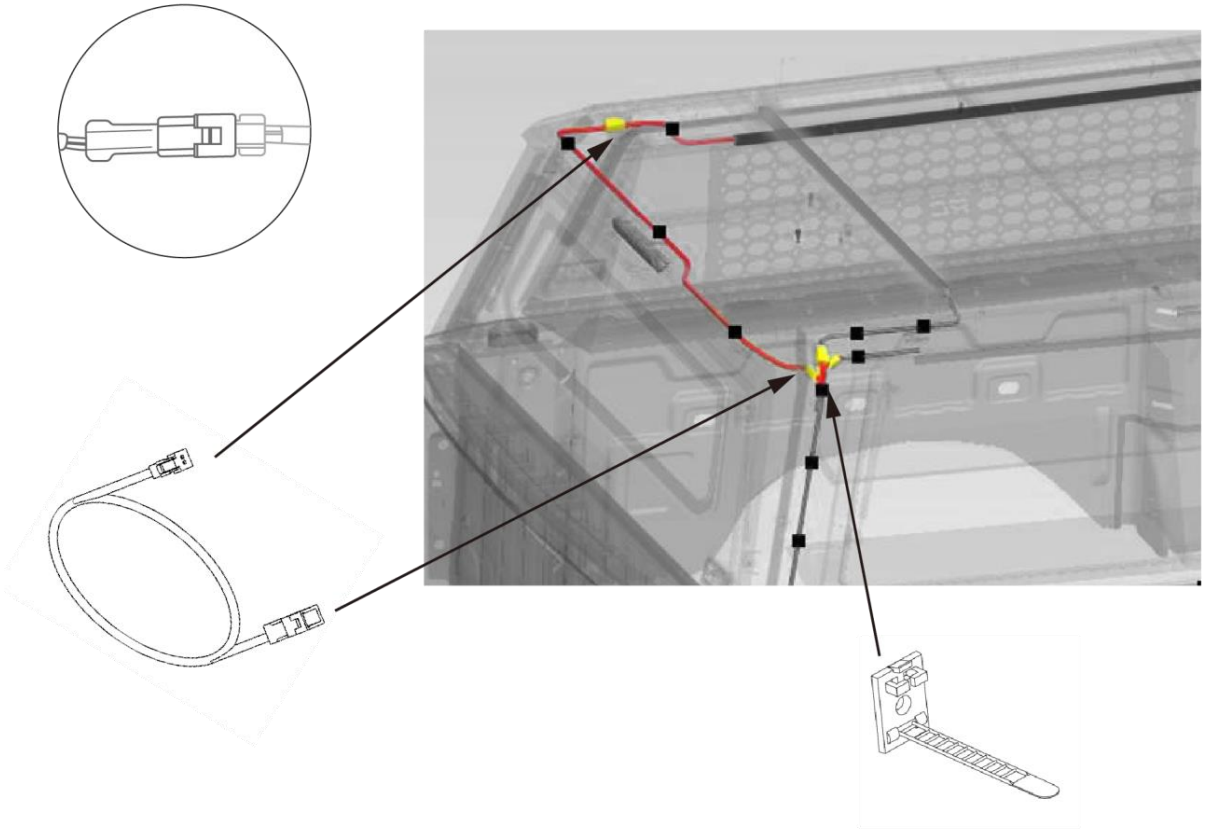

By purchasing any item sold by Rough Country, LLC, the buyer expressly warrants that he/she is in compliance with all applicable, State, and Local laws and regulations regarding the purchase, ownership, and use of the item. It shall be the buyer’s responsibility to comply with all Federal, State and Local laws governing the sales of any items listed, illustrated or sold. The buyer expressly agrees to indemnify and hold harmless Rough Country, LLC for all claims resulting directly or indirectly from the purchase, ownership, or use of the items.

trailfortress.com/rough-country-bed-cap-molle-panel-side-storage-bin-734074