TRAIL FORTRESS

BUILT FOR THE TRAIL. CHECKED FOR YOUR TRUCK.

Rough Country 73400 Installation Instructions

Modular Truck Bed Cap for 2021–2025 Ford F-150: 5'7" Bed

Part number: 73400

trailfortress.com/modular-truck-bed-cap-ford-f150-5-7-bed-rough-country-73400

Scan for fitment, price and install help

ROUGH COUNTRY

Ford 150 | 21 -Up | 5’7” Bed Cap

Thank you for choosing Rough Country for all your vehicle needs.

Please read instructions before beginning installation. Check the kit hardware against the kit contents shown below. Be sure you have all needed parts and know where they go. If question exist, please call us @1-800-222-7023. We will be happy to answer any questions concerning this product. Check all fasteners for proper torque. Check to ensure for adequate clearance between all components. Periodically check all hardware for tightness.

Care and Cleaning

- Mild soap may be used also to clean the Product.
- Periodically check hardware for tightness.

Components

Front Frame Door
Box Part # 734001

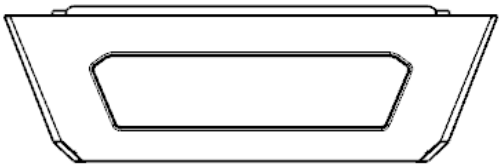

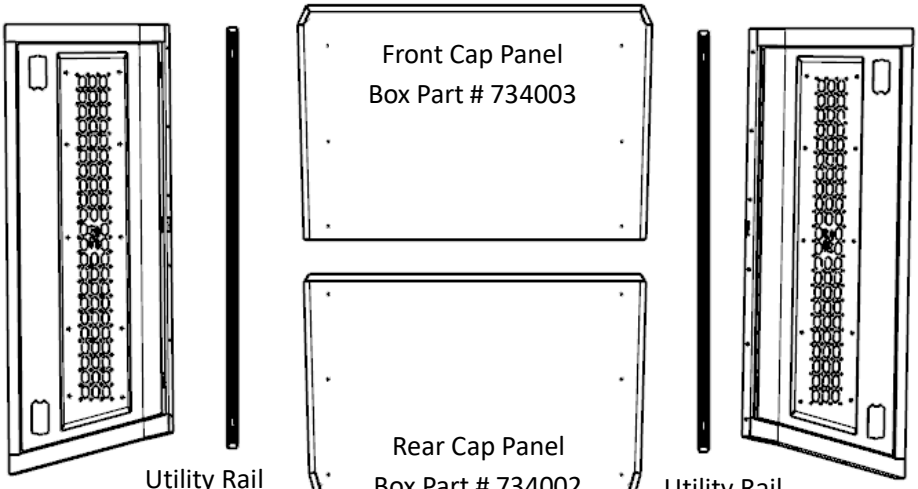

DR Side Door
Box Part # 734002

Front Cap Panel
Box Part # 734003

Rear Cap Panel
Box Part # 734002

PASS Side Door
Box Part # 734003

Utility Rail
Box Part # 734003

Utility Rail
Box Part # 734003



Rear Door Assembly
Box Part # 734001

Hardware kits for the bed cap

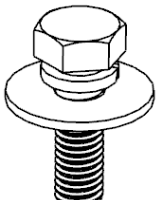

8mmx25mm Combo Kits X40

Bottom Sealing Strip、Bottom Short Pads、Foam Seal Tape



Sealing Strip X1

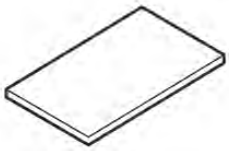

Black Short Pads X8

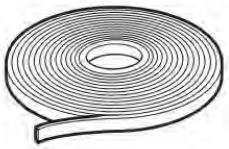

Foam Seal Tape X1

Hardware kits for the Front/Rear Roof Top Bed Cap Panels

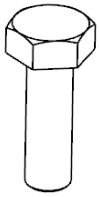

8mmx25mm Hex Bolts X5

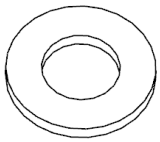

8mm Flat Washers X5

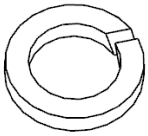

8mm Lock Washers X5

Hardware kits for the cross rail

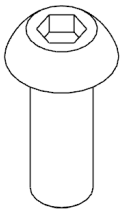

6mmx16mm Allen Bolts X12

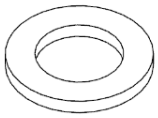

Plastic 6mm Flat Washers X12

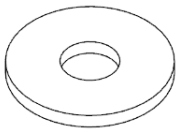

6mm Flat Washers X12

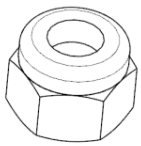

6mm Lock Nuts X12

Tools



Rachet



Extensions



13mm Socket



10&13mm Wrench



S4

STEP 1

Install the front roof top bed cap panel and the rear roof top bed cap panel, align with each other and install

hardware, do not tighten the hardware.



8mmx25mm Hex Bolts X5 **8mm Flat Washers X5** **8mm Lock Washers X5**

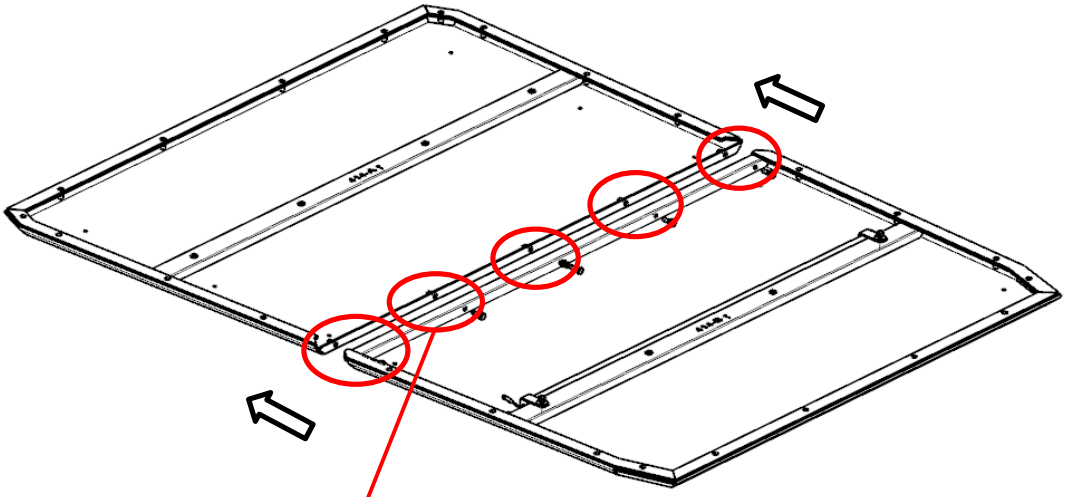

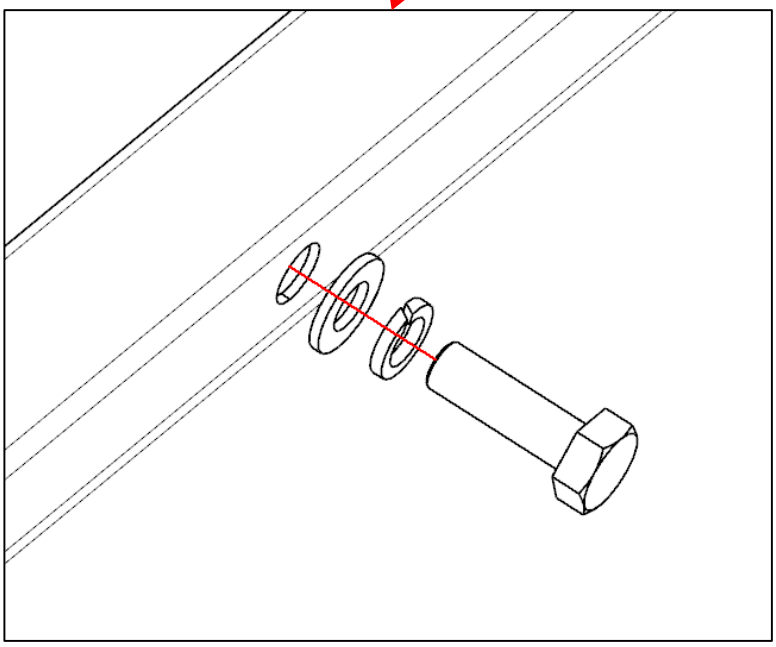

Align the mounting holes of the front bed cap panel and the rear bed cap panel

STEP 2

Install the Utility rail on the bed cap top panels by inserting the supplied 6 mm x 16 mm Bolts / 6 mm pl tic washers

in the rail from the top and secure the rail to the bed cap top panel with the 6 mm flat washers and 6 mm Flange lock nuts.

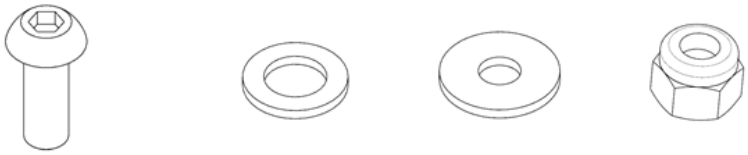

6mmx16mm Allen Bolts X12 **Plastic 6mm Flat Washers X12** **6mm Flat Washers X12** **6mm Lock Nuts X12**

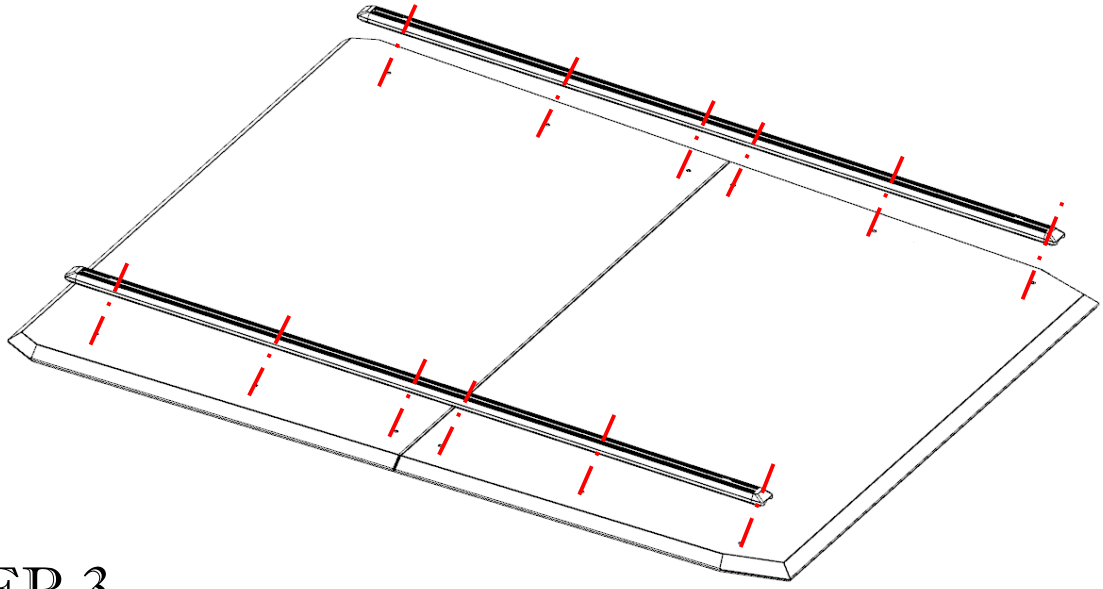

STEP 3

Install the DR Side Door to the bed cap roof panel, do not tighten the hardware.

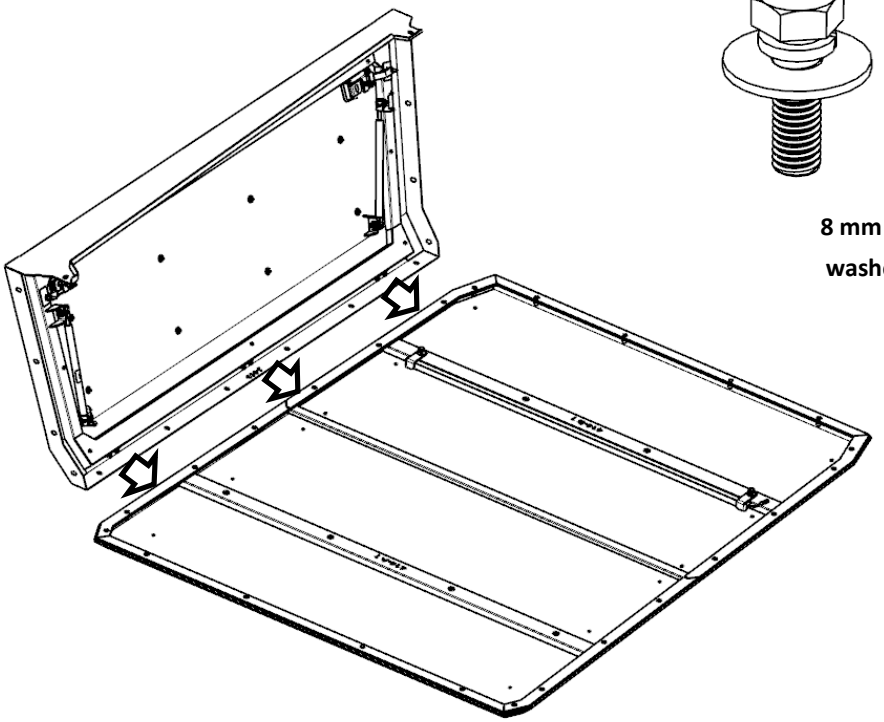

X 6

8 mm x 25 mm Bolt, Lock washer and Flat Washer

STEP 4

Install the PASS Side Door to the bed cap roof panel, do not tighten hardware.

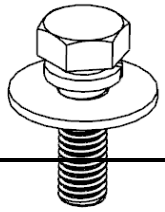

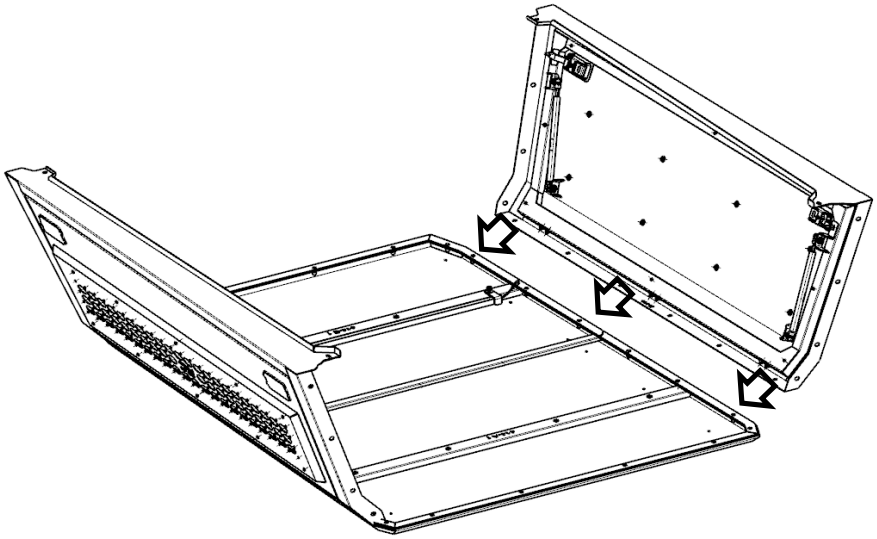

8 mm x 25 mm Bolt, Lock washer and Flat Washer

STEP 5

Install the front frame to the bed cap assembly, do not tighten the hardware.

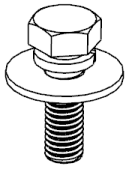

X 14

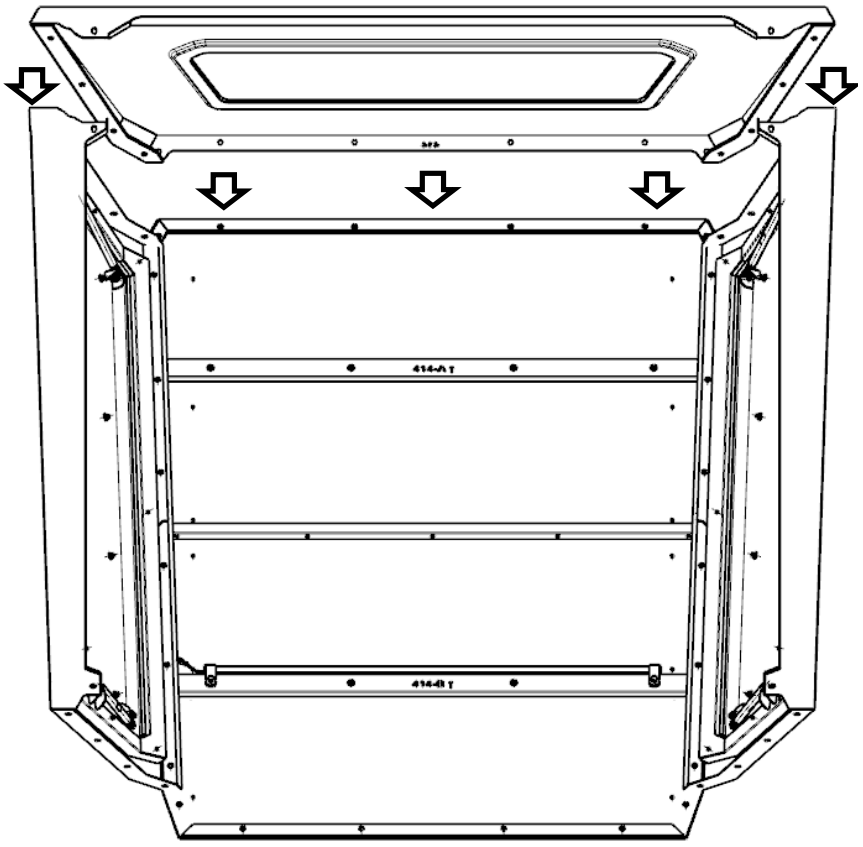

8 mm x 25 mm Bolt, Lock washer and Flat Washer

STEP 6

Install the rear door assembly to the bed cap assembly, do not tighten the hardware.

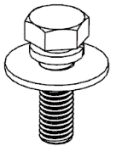

X 14

8 mm x 25 mm Bolt, Lock washer and Flat Washer

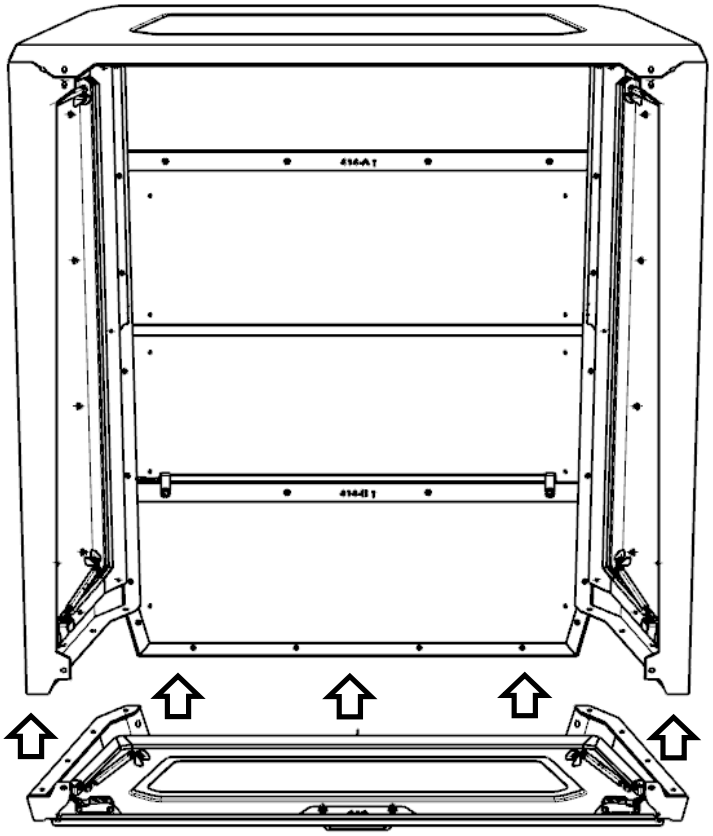

STEP 7

Adjust the gap of each panel ensuring the bolt holes / panels are aligned. Tighten hardware.
The same method will be used for the opposite side.

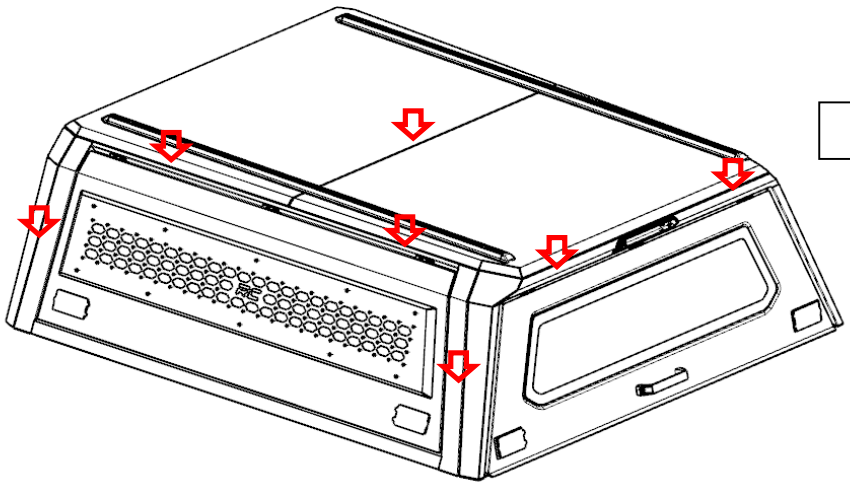

Align all panels

Tight

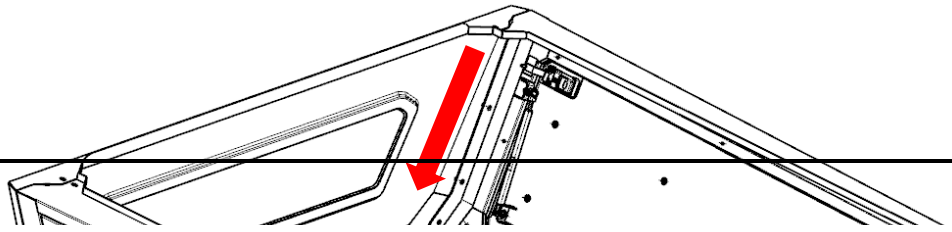

Tighten (24) bolts of top panel as shown below.

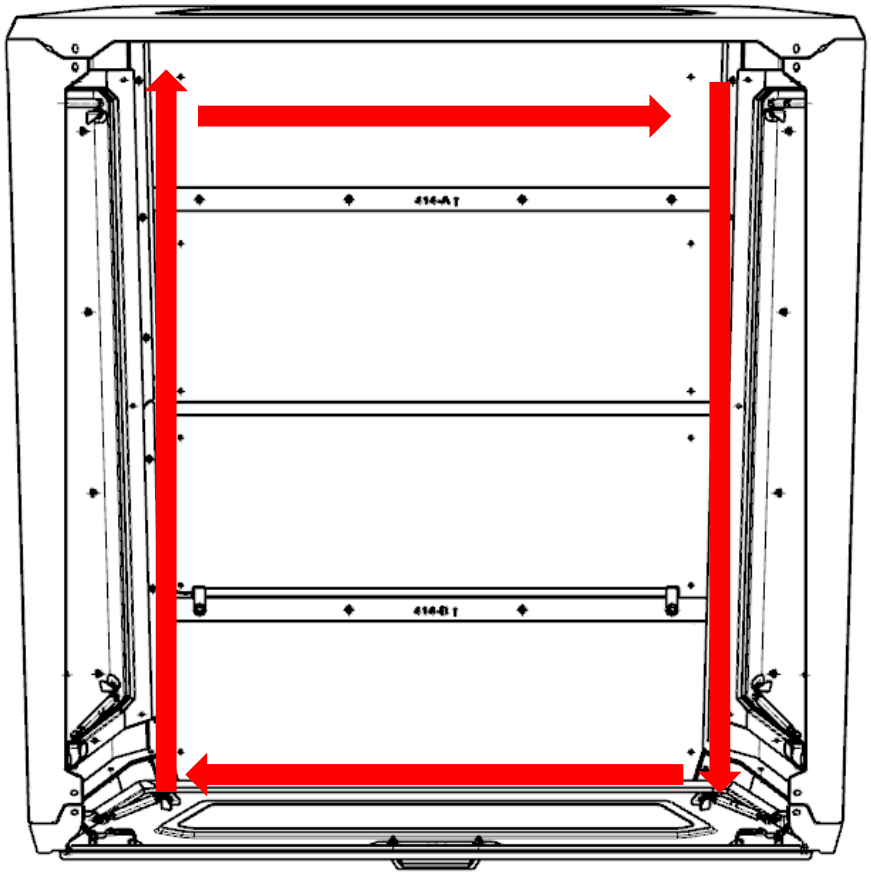

STEP 8

Wipe and clean the bottom of the bed cap. Apply the Sealing Strip to the bottom paying attention to the location and orientation of the stip. See below.

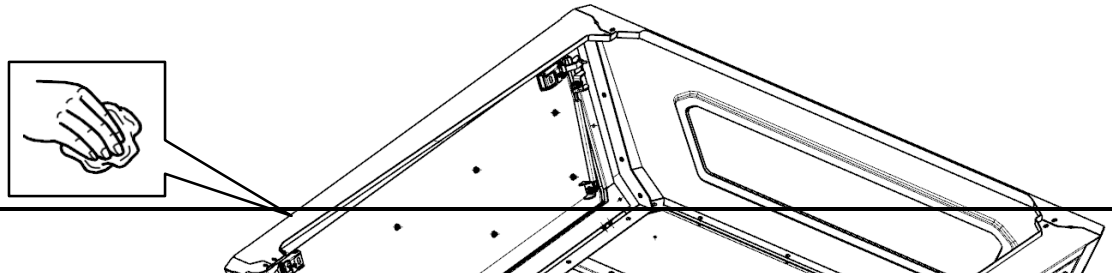

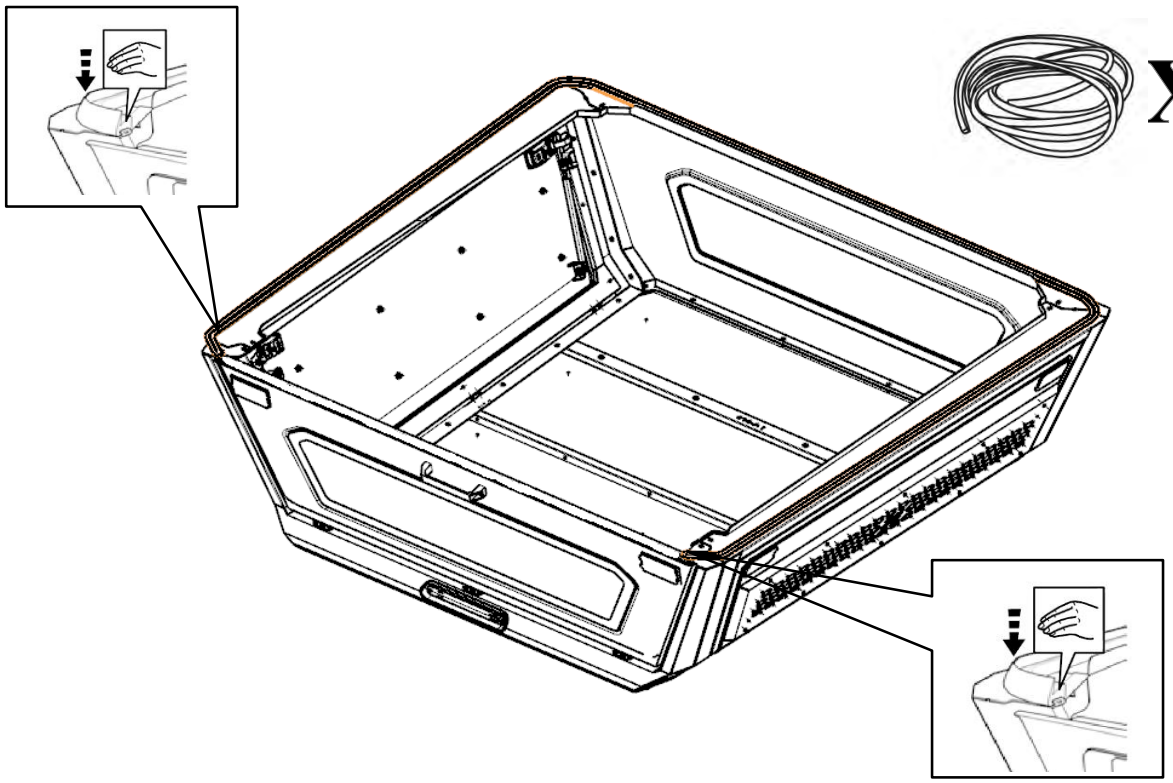

X 1

REAR FLANGE

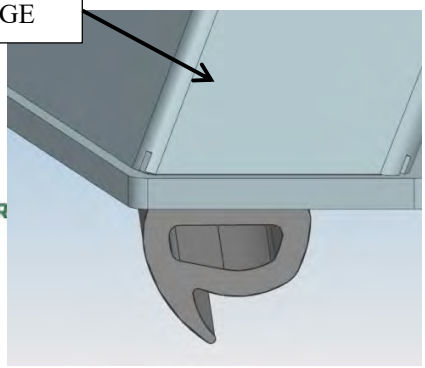

CORRECT O-RUBBER ORIENTATION

REAR FLANGE

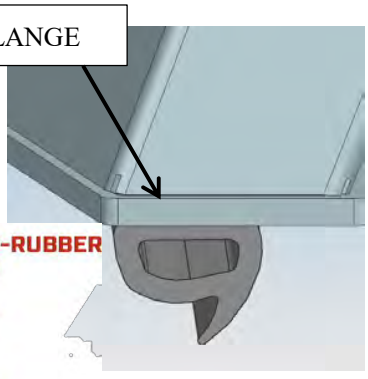

INCORRECT O-RUBBER ORIENTATION

STEP 9

Place the short pads along the inside of the sealing strip previously installed at the indicated locations. This is performed to give the bed cap a firm location to rest and protect the bed of the vehicle.

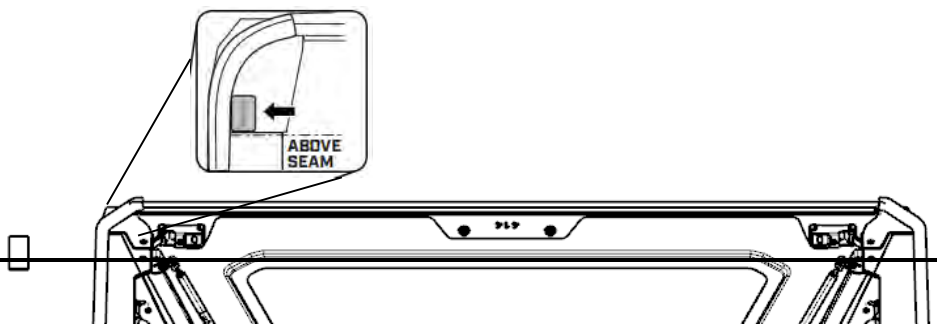

STEP 10

Apply the Foam Seal Tape to the top of the bulkhead on the truck bed and trim any excess if needed.

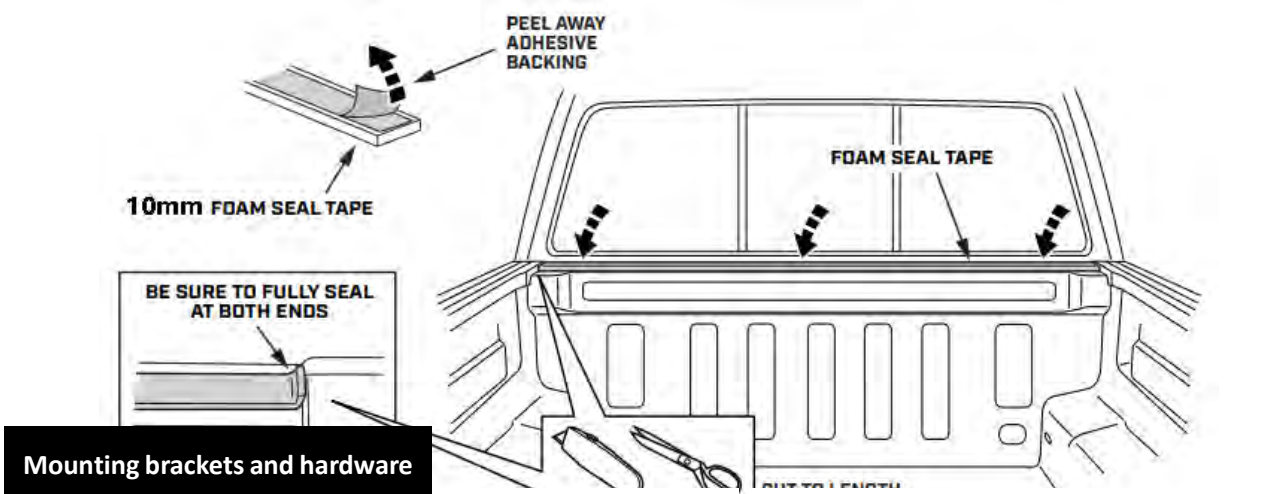

Mounting brackets and hardware

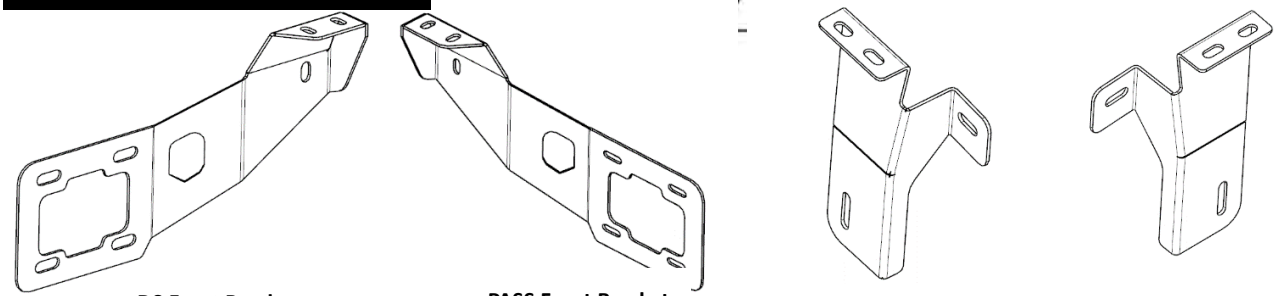

DS Front Bracket

PASS Front Bracket

DS Rear Bracket

PASS Rear Bracket

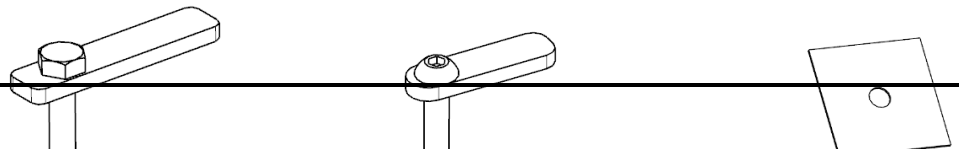

8mmx30mm Bolt PlateX2



6mmx35mm Allen Bolts X8

8mmx35mm Bolt Plate X4

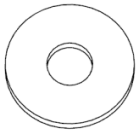

6mm Flat Washers X8

8 Plastic Block X6



6mm Lock Washers X8

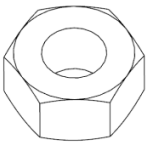

8mm Hex Nuts X6

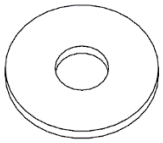

8mm Flat Washers X6



8mm Lock Washers X6

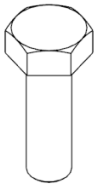

8mmx25mm Hex Bolts X8

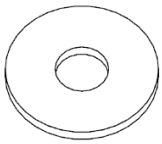

8mm Flat Washers X16

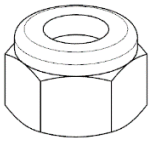

8mm Hex Lock Nuts X8

Tools





13mm



13mm



S4

STEP 11

If factory tie down cleats are present, remove them at this time. They can be reinstalled with the mounting brackets if desired. Align the front bracket (left) with the body hole position, as shown in the figure below. Threaded inserts are present from the factory. Use the 8 mm washers, spring washers, and bolts to attach the bracket in the corresponding position. (Repeat this operation with the front bracket (right) on the other side of the vehicle).



8mmx35mm Bolt Plate X1

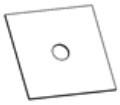

8 Plastic Block X1



8mm Hex Nut X1



8mm Flat Washers X6



8mm Lock Washer X1



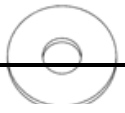



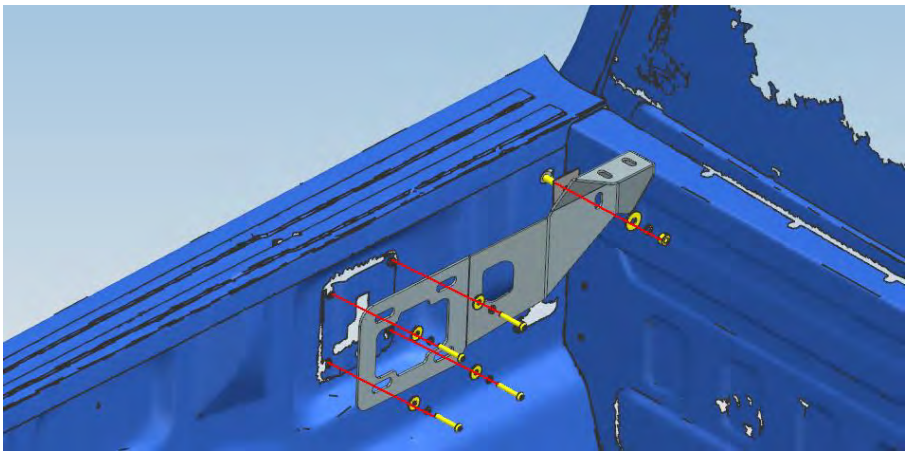

STEP 12

Align the rear bracket (left) with the body hole position, as shown in the figure below. Threaded inserts are present from the factory. Using 8 mm hardware attach the bracket in the corresponding position. (Repeat this operation with the front bracket (right) on the other side of the vehicle)

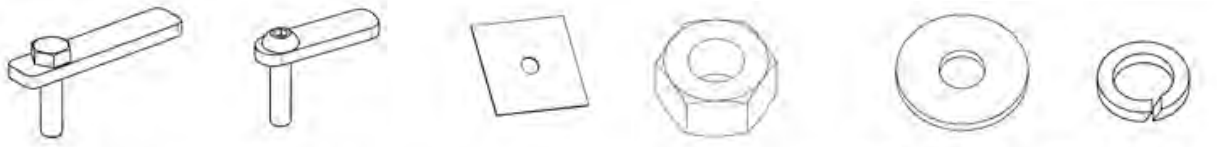

8mmx30mm Bolt PlateX1 | 8mmx35mm Bolt Plate X1 | Φ8 Plastic Block X2 | 8mm Hex Nuts X2 | 8mm Flat Washers | 8mm Lock Washers X2

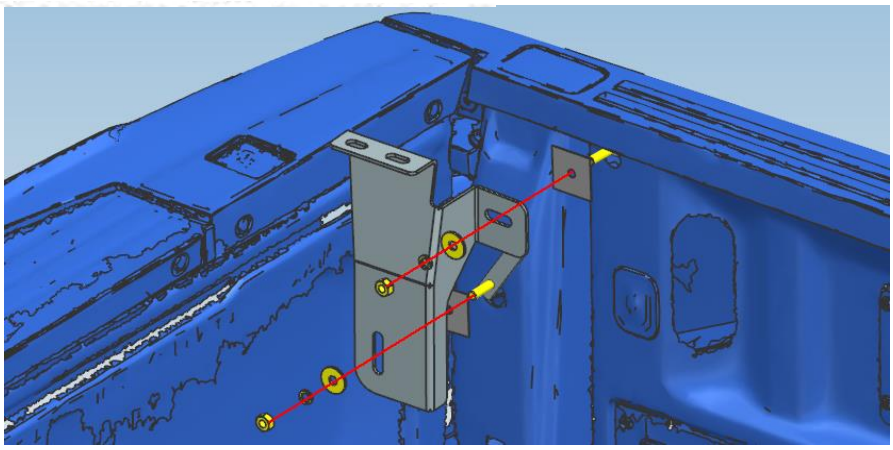

STEP 13

It is recommended to use four people to lift the assembled bed cap onto the bed of the vehicle. To avoid damaging the bottom sealing strip, do not slide the bed cap lid into position.



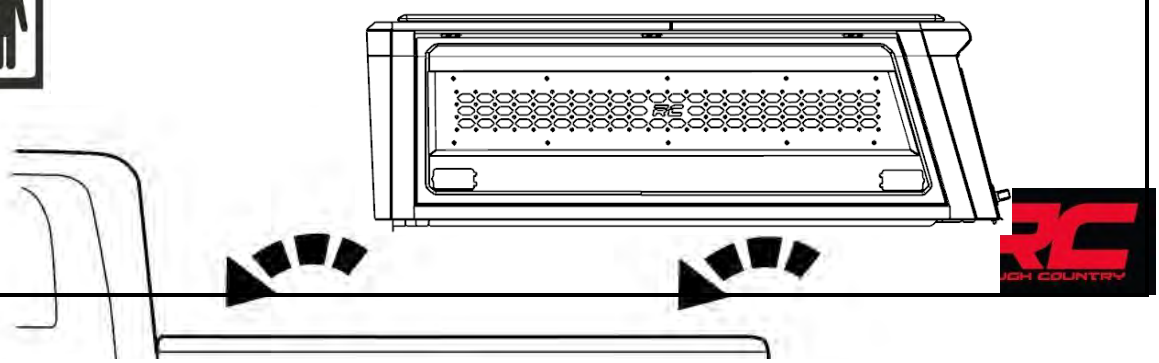

STEP 14

Check the position of the bed cap with the vehicle and center if needed. Do NOT slide the bed cap as that could cause damage to the lower seal. Please note that there should be a gap of 20mm or more between the bed cap and the cab. Do NOT push the bed cap too close to the cab.

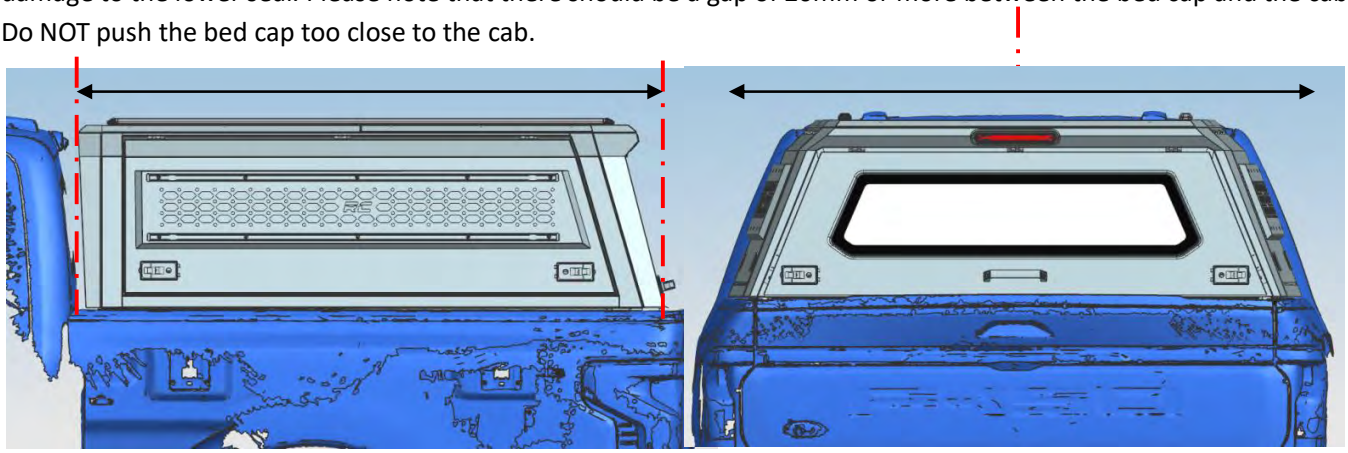

STEP 15

Walk around the bed cap and bed to ensure that the bottom seal strip is installed correctly and the strip is properly inserted under the bed cap.

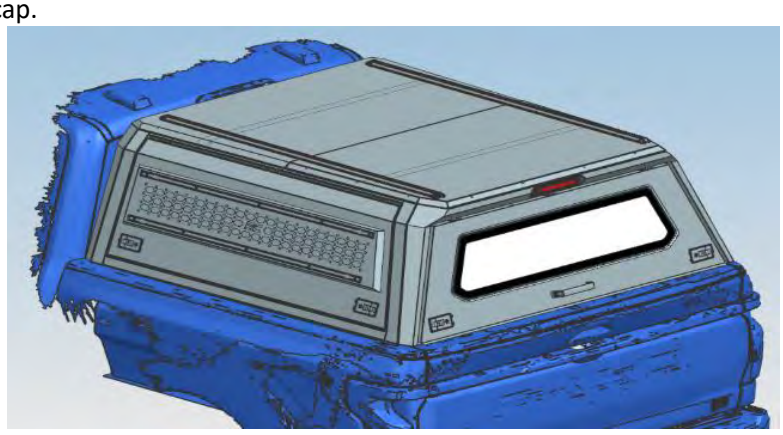

STEP 16

Adjust the position of the bed cap and secure the front bracket to the DR side door and the front frame with 8mm fasteners as shown below. (Repeat on the passenger side of the vehicle)



8mmx25mm Hex Bolts X2



8mm Flat Washers X4



8mm Hex Lock Nuts X2

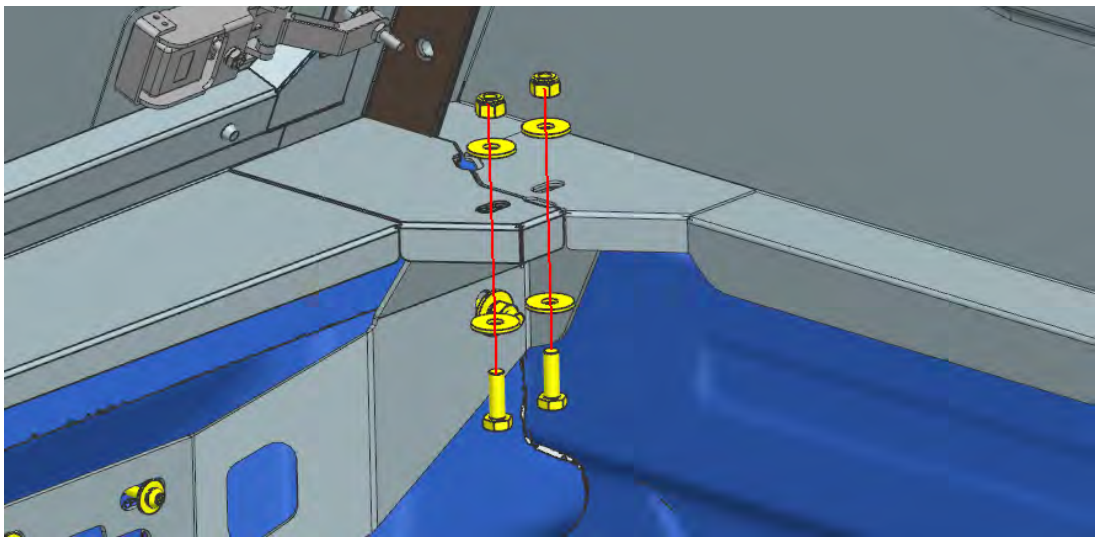

STEP 17

Adjust the position of the bed cap and secure the rear bracket to the DR side door and rear door assembly with 8mm fasteners as shown below. (Repeat on the passenger side of the vehicle)



8mmx25mm Hex Bolts X2



8mm Flat Washers X4



8mm Hex Lock Nuts X2

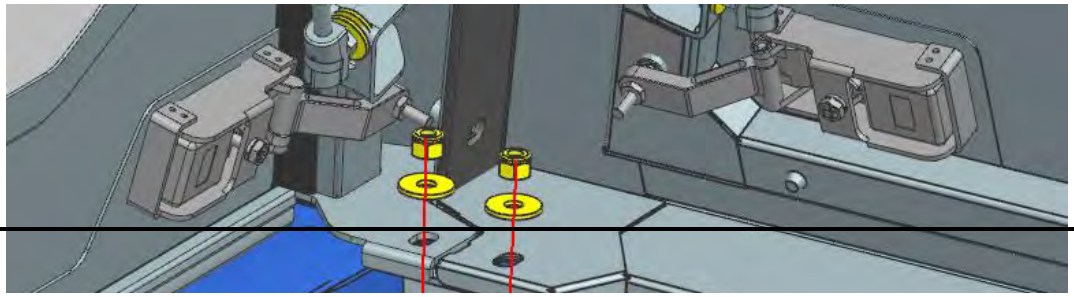

STEP 18

Peel off the backing on the adhesive back of the switch and position the switch onto the bed cap panel. Using zip ties, secure the wire onto the bed cap.

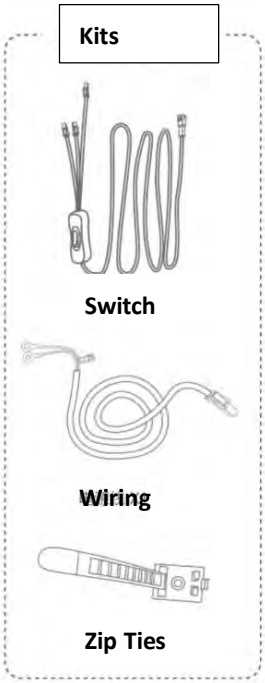

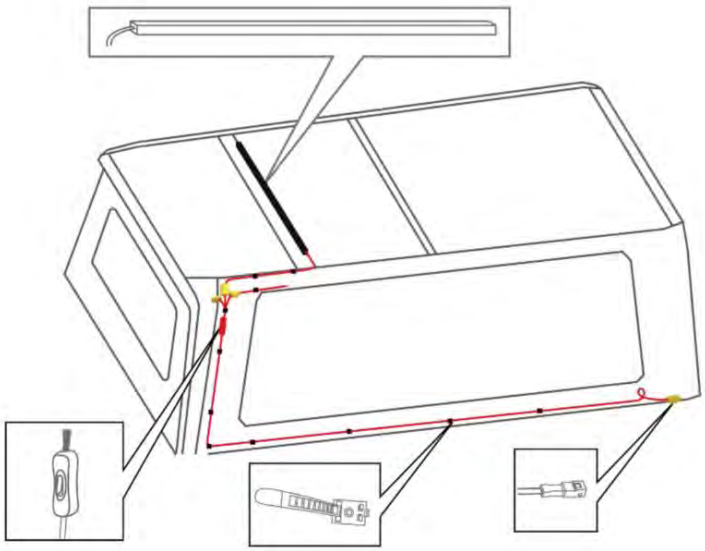

STEP 19

There are three plugs connected together on the switch. Connect the plug with the House label on the wire to the plug of the light strip. The other two plugs are for the optional side shelf unit and side storage unit with molle panel.

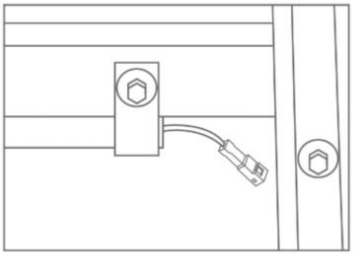

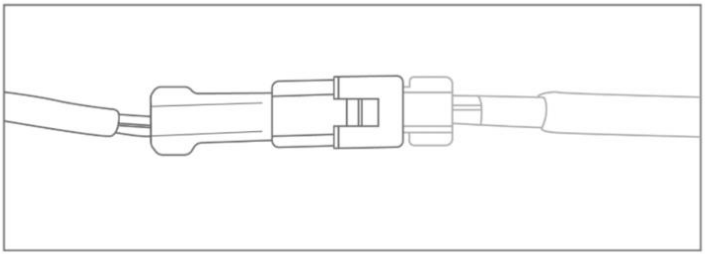

STEP 20

Connect the plug on the wiring to the separate plug on the switch, then route the wiring from the rear of the vehicle along the bottom of the vehicle taking care to route away from excessive heat and moving components. Route to the battery position or other 12-volt source on the vehicle. Connect the positive and negative of the wiring to the positive and negative terminals of the battery or 12-volt source. (See Next Page)

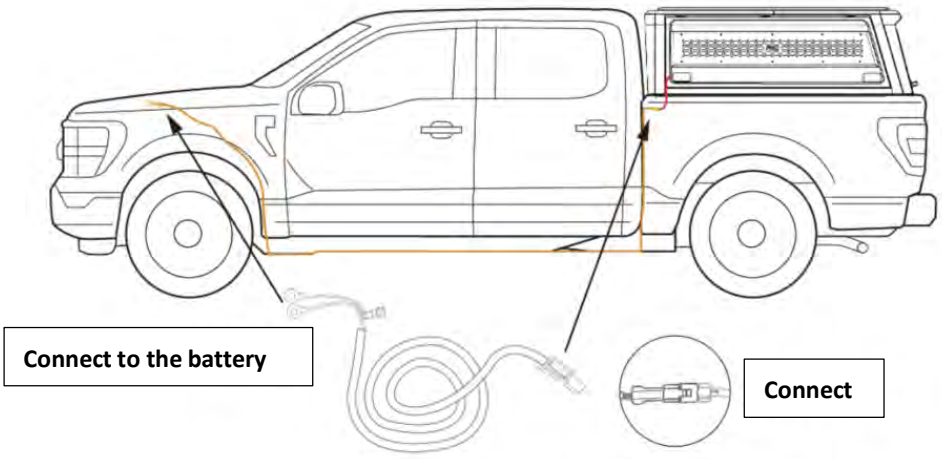

STEP 21

- Remove the tail light by removing the two bolts on the inside bed with a 5/16 socket. Pull the two wires of the brake light harness along the edge of the bed cap and route into the driver side tail light mounting area through the bed and into the area behind the brake light.

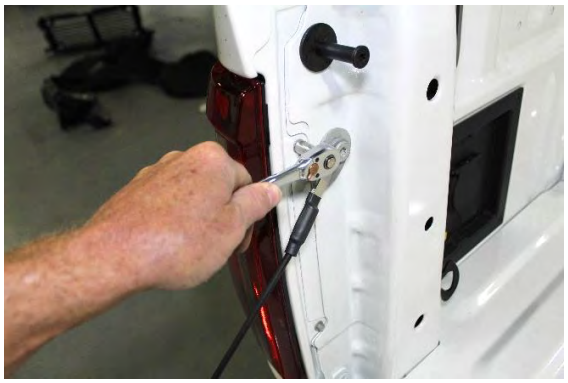



- Route the wires down along the driver's side frame taking care not to pull the wires and avoid sharp or high heat areas. Route up into the engine compartment near the air box.
- Locate the Green CHMSL wire under the air box in the loom. ***NOTE***: It may be necessary to remove the mounting bolt from the air box to allow the box to be shifted and allow access to the single Green CHMSL wire.
- Strip the wire and using a butt connector, connect the red power wire to the CHMSL wire. Ground the black wire to ground near the air box.
- Re-install the tail light and secure the harness using zip ties to avoid damage to the harness.





By purchasing any item sold by Rough Country, LLC, the buyer expressly warrants that he/she is in compliance with all applicable, State, and Local laws and regulations regarding the purchase, ownership, and use of the item. It shall be the buyer's responsibility to comply with all Federal, State and Local laws governing the sales of any items listed, illustrated or sold. The buyer expressly agrees to indemnify and hold harmless Rough Country, LLC for all claims resulting directly or indirectly from the purchase, ownership, or use of the items.