TRAIL FORTRESS

BUILT FOR THE TRAIL. CHECKED FOR YOUR TRUCK.

Rough Country 72110 Installation Instructions

Roof Rack with 40-Inch LED Light Bar for Tacoma (2024–2025)

Part number: 72110

trailfortress.com/roof-rack-tacoma-rough-country-72110

Scan for fitment, price and install help

ROUGH COUNTRY
SUSPENSION SYSTEMS®

Toyota 2024 Tacoma Roof Rack

Thank you for choosing Rough Country.

Rough Country recommends a certified technician install this system. In addition to these instructions, professional knowledge of disassembly/reassembly procedures as well as post installation checks must be known. Attempts to install this system without this knowledge and expertise may jeopardize the integrity and/or operating safety of the vehicle.

Please read instructions before beginning installation. Check the kit hardware against the parts list on this page and the product layout on the last page. Be sure you have all needed parts and know where they go. Also please review tools needed list and make sure you have needed tools.

PRODUCT USE INFORMATION

⚠WARNING As a general rule, the taller a vehicle is, the easier it will roll. Seat belts and shoulder harnesses should be worn at all times. Avoid situations where a side rollover may occur.

Generally, braking performance and capability are decreased when larger/heavier tires and wheels are used. Take this into consideration while driving. Do not add, alter, or fabricate any factory or after-market parts to increase vehicle height over the intended height of the Rough Country product purchased. Mixing component brands is not recommended.

Rough Country makes no claims regarding lifting devices and excludes any and all implied claims. We will not be responsible for any product that is altered.

If questions exist we will be happy to answer any questions concerning the design, function, and correct use of our products.

⚠NOTICE NOTICE TO DEALER AND VEHICLE OWNER

Any vehicle equipped with any Rough Country product should have a “Warning to Driver” decal installed on the inside of the windshield or on the vehicle’s dash. The decal should act as a constant reminder for whoever is operating the vehicle of its unique handling characteristics.

INSTALLING DEALER - it is your responsibility to install the warning decal and forward these installation instructions on to the vehicle owner for review. These instructions should be kept in the vehicle for its service

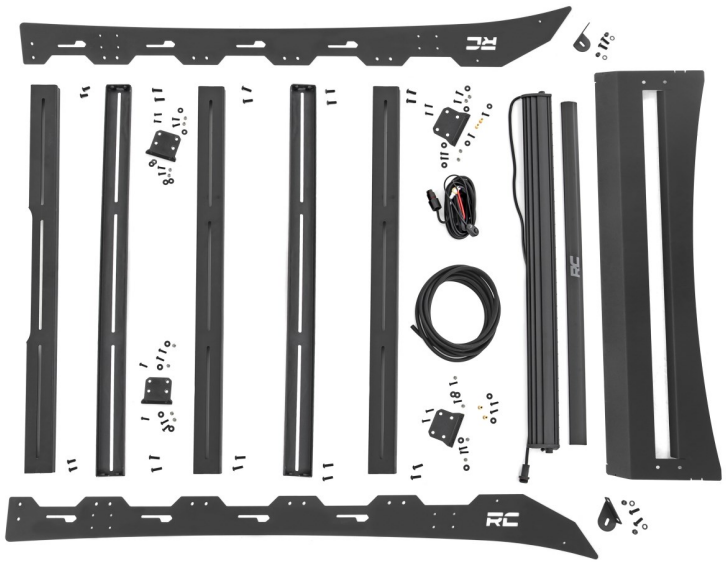

KIT CONTENTS:

72110991

73106BAG1

- 4 - (A) 6mm Nutsert
- 28 - (B) 6mm x 20mm Button Head Bolt
- 16 - (C) 6mm Lock Nut
- 24 - (D) 6mm Flat Washer
- 24 - (E) 8mm x 25mm Button Head Bolt
- 4 - (F) 8mm Flat Washer
- 4 - (G) 8mm Lock Nut

(H) Roof Rack Front Panel
(I) Dr Side Rail
(J) Pass Side Rail
(K) Dr Front Mount
(L) Pass Front Mount
2 - (M) Rear Mount
(N) Dr Front Light Bar Bracket
(O) Pass Front Light Bar Bracket

72110992

4 - (P) Rail
(Q) Rear Rail
15’ - Rubber Seal

TOOLS REQUIRED:

Painters Tape
Plastic Pry Tool
4mm Allen Wrench
5mm Allen Wrench
10mm Wrench or Socket
13mm Wrench or Socket

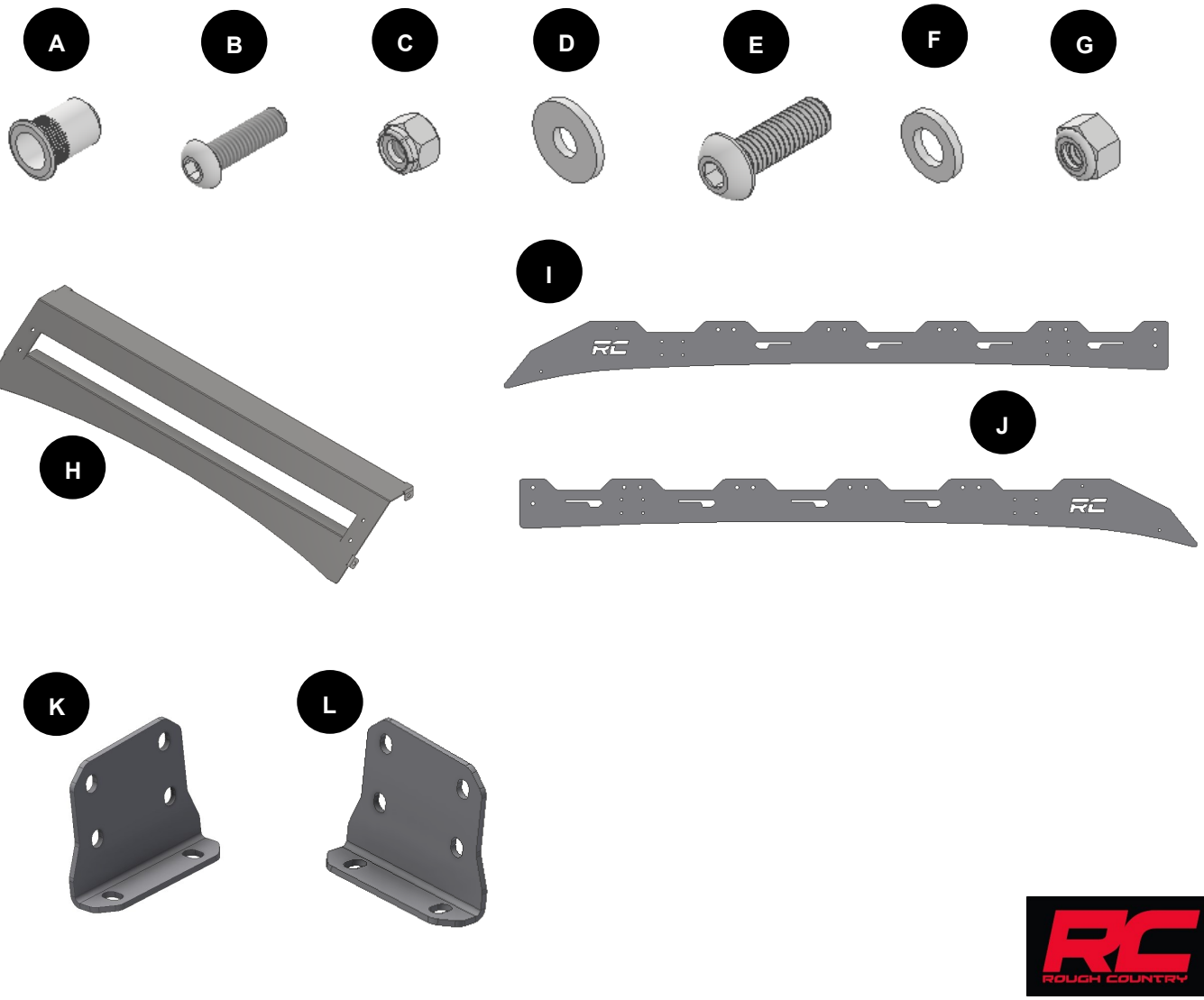

M

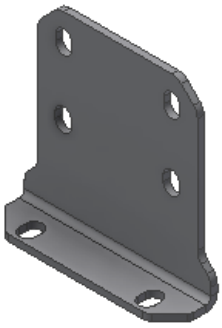

N

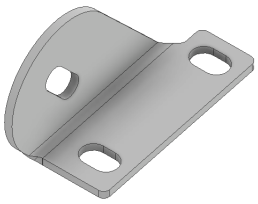

O

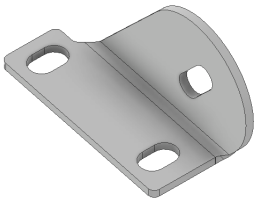

P

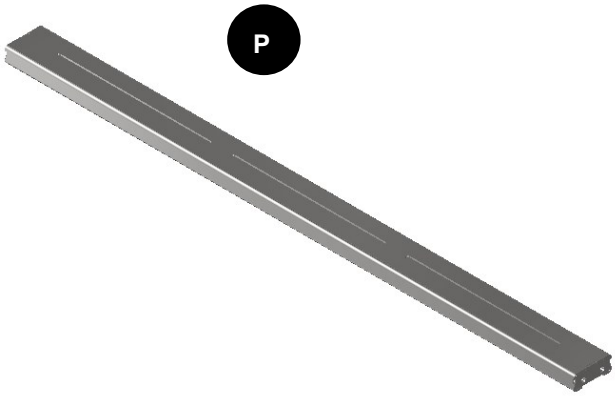

Q

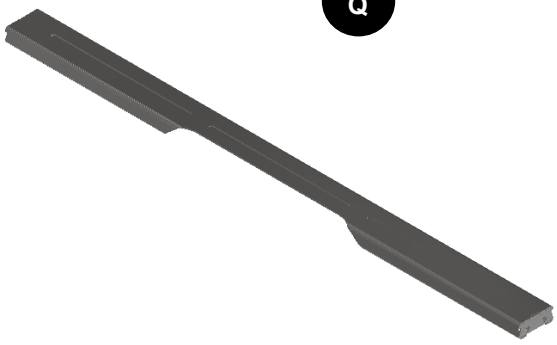

Torque Specs:

Size	Grade 5	Grade 8	Size	Class 8.8	Class 10.9
5/16”	15 ft/lbs	20ft/lbs	6MM	5ft/lbs	9ft/lbs
3/8”	30 ft/lbs	35ft/lbs	8MM	18ft/lbs	23ft/lbs
7/16”	45 ft/lbs	60ft/lbs	10MM	32ft/lbs	45ft/lbs
1/2”	65 ft/lbs	90ft/lbs	12MM	55ft/lbs	75ft/lbs
9/16”	95 ft/lbs	130ft/lbs	14MM	85ft/lbs	120ft/lbs
5/8”	135ft/lbs	175ft/lbs	16MM	130ft/lbs	165ft/lbs
3/4”	185ft/lbs	280ft/lbs	18MM	170ft/lbs	240ft/lbs

Installation Instructions

1. Place painters tape around the border of the cab roof. **See Photo 1.**
2. Use a pry tool to remove the four plastic covers in the grooves of the roof. **See Photo 2.**



Photo 1

Apply painters tape.

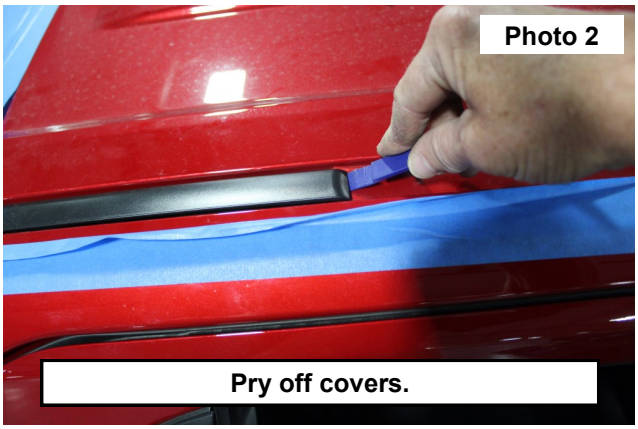

Photo 2

Pry off covers.

3. Peel the adhesive tape that covers the threaded holes. **See Photo 3.**
4. Install the (4) supplied 6mm nutserts (A) into the tabs of the front panel (H) using a nutsert tool (sold separately) or by using the supplied 6mm x 30mm bolt, washer, and the 8mm nut screw them into a nutsert. Next place the assembly into the hole. Next using a 10mm wrench and a 13mm wrench tighten the bolt while holding the nut with the 13mm wrench. This will compress the nut insert and lock it into place in the hole. **See Photo 4.**

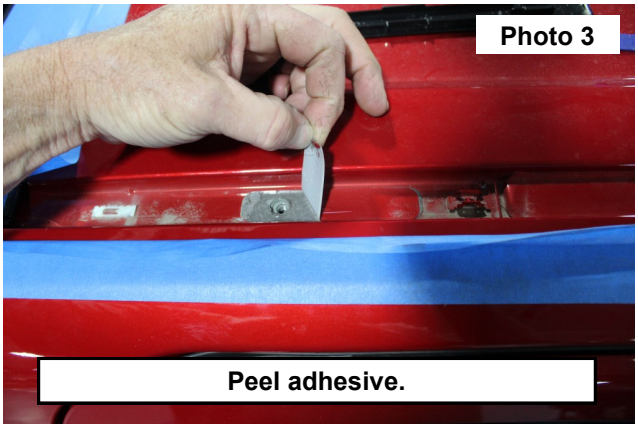

Photo 3

Peel adhesive.

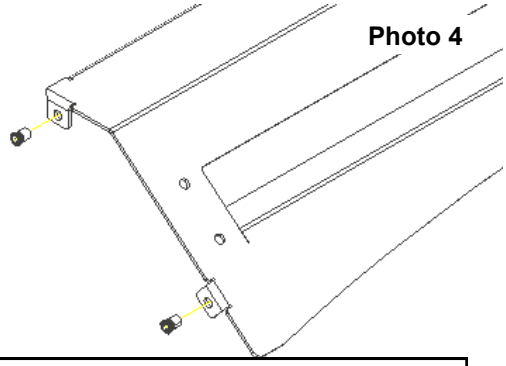

Photo 4

Install nutserts.

5. Install the light bar brackets (N and O) into the front panel (H) using the supplied 8mm bolts (E), washers (F), and lock nut (G). Tighten with a 5mm Allen wrench and 13mm wrench. **NOTE:** Driver side shown. **See Photo 5.**
6. Install the light bar onto the brackets (N and O) using the hardware from the light bar kit.
7. Use the supplied rubber seal along the bottom edges of the side rails (I and J) as well as the front panel (H).
8. Connect the side rails (I and J) to the front panel (H) using the supplied 6mm bolts (B) and flat washers (D). Loosely tighten with a 4mm Allen wrench. **See Photo 6.**

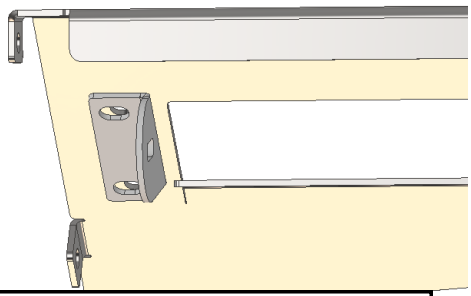

Photo 5

Install light brackets.

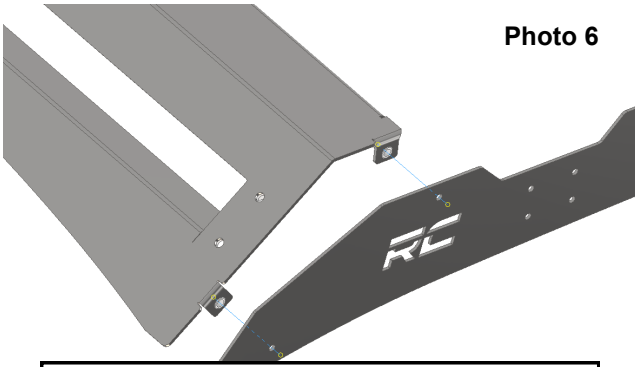

Photo 6

Install connect side rails to front panel.

9. Install the cross rails (P and Q) to the side rails (I and J) as shown in **Photo** 7 using the supplied 8mm bolts (E). Loosely tighten with a 5mm Allen wrench.
10. Install the driver front mount (K), passenger front mount (L), and (2) rear mount (M) using the supplied 6mm bolt (B), 6mm lock nut (C), and (2) 6mm flat washer (D). Loosely tighten with a 4mm Allen wrench and 10mm wrench. **See Photo 8.**

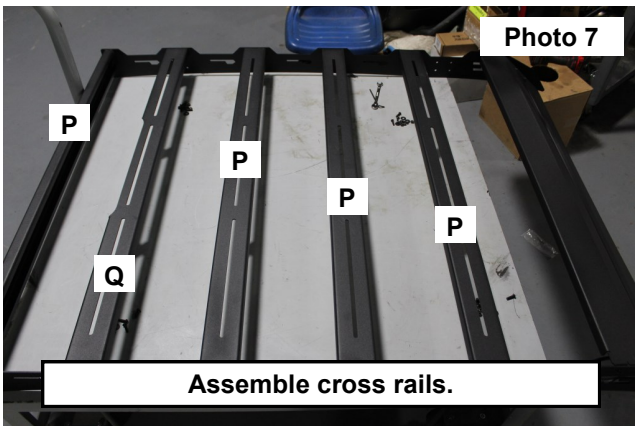

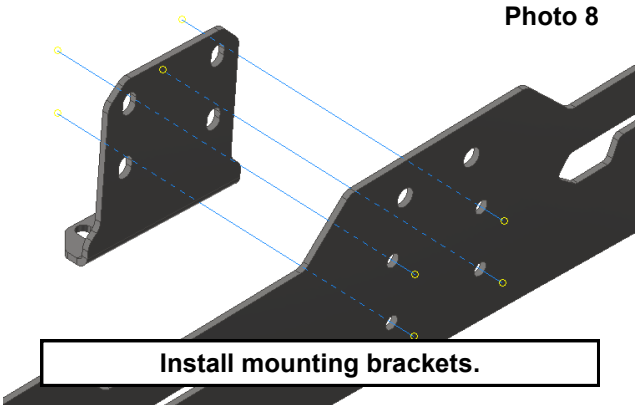

11. With assistance, lift the roof rack onto the truck cab and align the mounting brackets to the threaded holes in the cab.
12. Use (2) supplied 6mm bolts (B) and (2) 6mm flat washers (D) for each mounting bracket. Tighten with a 4mm Allen wrench. **See Photo 9.**
13. With assistance, push the roof rack down and towards the truck bed to create a tight seal with the rubber. Tighten all hardware.
14. With the rack installed, wire the light bar to preference.

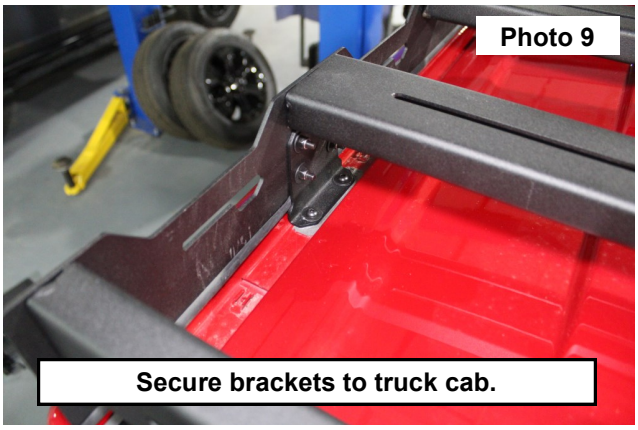

POST INSTALLATION

1. Check and recheck all fasteners for proper torque. Check to ensure there is adequate clearance between all rotating, mobile, fixed and heated members. Check clearance between upper control arm and sidewall of tire for proper clearance. Check steering for interference and proper working order. Test brake system.
2. Re torque all fasteners after 500 miles. Visually inspect components and re torque fasteners during routine vehicle service.

MAINTENANCE INFORMATION

It is the ultimate buyers responsibility to have all bolts/nuts checked for tightness after the first 500 miles and then every 1000 miles. Wheel alignment steering system, suspension and driveline systems must be inspected by a qualified professional mechanic at least every 3000 miles.



Thank you for choosing Rough Country for your suspension needs.

By purchasing any item sold by Rough Country, LLC, the buyer expressly warrants that he/she is in compliance with all applicable , State, and Local laws and regulations regarding the purchase, ownership, and use of the item. It shall be the buyers responsibility to comply with all Federal, State and Local laws governing the sales of any items listed, illustrated or sold. The buyer expressly agrees to indemnify and hold harmless Rough Country, LLC for all claims resulting directly or indirectly from the purchase, ownership, or use of the items.