Rough Country 6540P3BOX Installation Instructions

Heavy-Duty Greaseable Replacement Ball Joint

Part number: 6540P3BOX

trailfortress.com/heavy-duty-greaseable-replacement-ball-joint-rough-country-6540p3box

Scan for fitment, price and install help

ROUGH COUNTRY
SUSPENSION SYSTEMS®

INSTALLATION INSTRUCTIONS

1. Align hole/notch on ball joint to the inside of the vehicle before pressing ball joint into control arm. **See Photo.**
2. Using a ball joint press, press ball joint into control arm until ball joint is fully seated.

⚠ NOTICE **Ball joint must be greased before use.**
Check ball joint grease after the first 100 miles and then every 3000 miles.

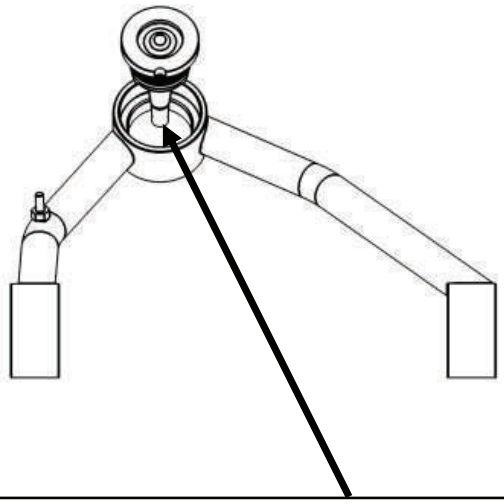

Align hole/notch to the inside of the control arm.

Visit us on the web @ www.roughcountry.com for your off road needs.

By purchasing any item sold by Rough Country, LLC, the buyer expressly warrants that he/she is in compliance with all applicable , State, and Local laws and regulations regarding the purchase, ownership, and use of the item. It shall be the buyers responsibility to comply with all Federal, State and Local laws governing the sales of any items listed, illustrated or sold. The buyer expressly agrees to indemnify and hold harmless Rough Country, LLC for all claims resulting directly or indirectly from the purchase, ownership, or use of the items.