TRAIL FORTRESS

BUILT FOR THE TRAIL. CHECKED FOR YOUR TRUCK.

Rough Country 568 Installation Instructions

2 Inch Aluminum Leveling Kit for 2009–2013 Ford F-150

Part number: 568

trailfortress.com/2-inch-aluminum-leveling-kit-ford-f150-rough-country-568

Scan for fitment, price and install help

ROUGH COUNTRY
SUSPENSION SYSTEMS®

2009-13 Ford F150 2” Suspension Kit

Thank you for choosing Rough Country for all your suspension needs.

Rough Country recommends a certified technician install this system. In addition to these instructions, professional knowledge of disassemble/reassembly procedures as well as post installation checks must be known. Attempts to install this system without this knowledge and expertise may jeopardize the integrity and/or operating safety of the vehicle.

⚠NOTICE Please read instructions before beginning installation. Check the kit hardware against the parts list on the last page. Be sure you have all needed parts and know where they go. Also please review tools needed list and make sure you have needed tools.

PRODUCT USE INFORMATION

⚠WARNING As a general rule, the taller a vehicle is, the easier it will roll. Seat belts and shoulder harnesses should be worn at all times. Avoid situations where a side rollover may occur.
Generally, braking performance and capability are decreased when larger/heavier tires and wheels are used. Take this into consideration while driving. Do not add, alter, or fabricate any factory or after-market parts to increase vehicle height over the intended height of the Rough Country product purchased. Mixing component brands is not recommended.
Rough Country makes no claims regarding lifting devices and excludes any and all implied claims. We will not be responsible for any product that is altered. If question exist we will be happy to answer any questions concerning the design, function, and correct use of our products.

NOTICE This suspension system was developed using a 35X12.50X18, tire with factory wheels. **Note** if wider tires are used, offset wheels will be required and trimming will be required.

⚠WARNING **Most 2011 and newer vehicles will require the EPAS (Electronic Power Assist Steering) plugs to be disconnected prior to beginning installation of this kit. See installation instructions. Failure to disconnect these plugs may result in damage to the EPAS module resulting in an error message being displayed, which will require replacement of the EPAS module.**

NOTICE **DEALER AND VEHICLE OWNER**

Any vehicle equipped with any Rough Country product should have a ñWarning to Driverò decal installed on the inside of the windshield or on the vehicleôs dash. The decal should act as a constant reminder for whoever is operating the vehicle of its unique handling characteristics.

INSTALLING DEALER - it is your responsibility to install the warning decal and forward these installation instructions on to the vehicle owner for review. These instructions should be kept in the vehicle for its service life.

Tools Needed
2009-2013 Models
15mm Wrench
15mm Socket
29mm Socket
1 1/16òWrench
21mm Wrench
16 mm Wrench
21 mm Wrench
3/8òmm Wrench
9/16òWrench
9/16òSocket
Hammer
Floor Jack
Jack Stands

Kit Contents:
2-Front Strut Extensions
1-Kit Bag that includes
6-10mm Washers
6-10mm Lock Nuts



Torque Specs:

Size	Grade 5	Grade 8
5/16ò	15 ft/lbs	20 ft/lbs
3/8ò	30 ft/lbs	35 ft/lbs
7/16ò	45 ft/lbs	60 ft/lbs
1/2ò	65 ft/lbs	90 ft/lbs
9/16ò	95 ft/lbs	130 ft/lbs
5/8ò	135 ft/lbs	175 ft/lbs
3/4ò	185 ft/lbs	280 ft/lbs
	Class 8.8	Class 10.9
12MM	55ft/lbs	75ft/lbs
14MM	85ft/lbs	120ft/lbs
16MM	130ft/lbs	165ft/lbs
18MM	170ft/lbs	240ft/lbs

trailfortress.com/2-inch-aluminum-leveling-kit-ford-f150-rough-country-568

INSTALLATION INSTRUCTIONS

1. Jack up the front of the vehicle and support the vehicle with jack stands, so that the front wheels are off the ground. Next remove the front tires/wheels, using a 21mm deep well socket.
2. Using a 15mm socket remove the front skid if the truck is equipped with a full front skid.
3. On 2011-up models and if equipped, remove the EPAS (Electronic Power Assist Steering) Plugs as shown located on the steering assembly by the front differential. **See Photo 1 & 2. <u>This must be done BEFORE installation is started.</u>**

Photo 1

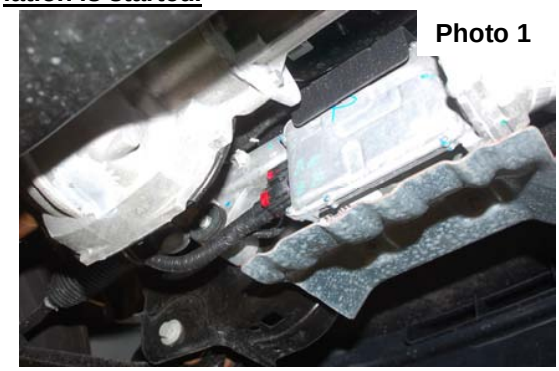

Photo 2



4. Place jack stand under the knuckle for support. Remove nut, using a 21mm wrench. Using a hammer hit the knuckle as shown to allow the ball joint to separate from the upper control arm. **See Photo 3.** Do not allow the knuckle to pull out far enough that it pulls the shaft out of the differential.
5. Using a 21mm wrench remove the nut from the steering linkage. Using a hammer hit on the side of the knuckle as shown, where the steering linkage is connected and remove from knuckle. Push linkage forward to make room for installation. Retain factory hardware. **See Photo 4**.

Photo 3

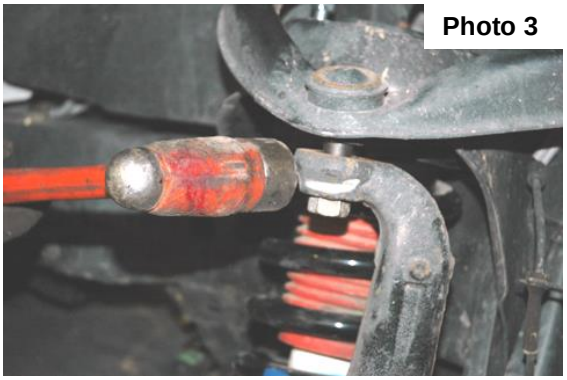

Photo 4

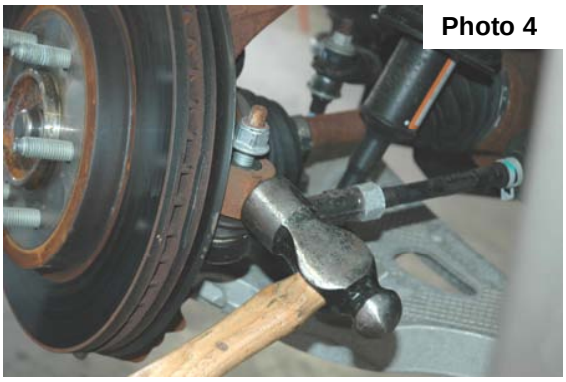

6. Remove the sway bar nut and bushings using a 15mm wrench. Retain factory hardware. **See Photo 5**.
7. Using a 15mm wrench, remove the nuts on the upper strut tower that holds the assembly in place. **See Photo 6**. One nut can be left on the upper bolts to hold the strut in place**.**

Photo 5



Photo 6

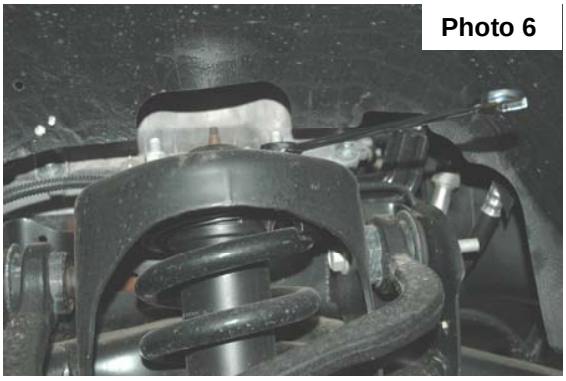

8. On 04-13 models using a 29mm socket, and 1 1/16ù wrench, remove the strut bolt from the lower control arm and remove the strut assembly from the vehicle. Retain the factory lower bolt for reassembly. Note the direction of the bolt for reassembly. **See Photo 7.**
9. Looking at the spacer as shown in **Photo 9** insert the stud through the back side of the spacer. Use washers and nut to pull the stud into place. For 09-13 models you will have one (A) driver side spacer and one (B) passenger side spacer. When installing the spacers both sides will have the RC logo to the outside.

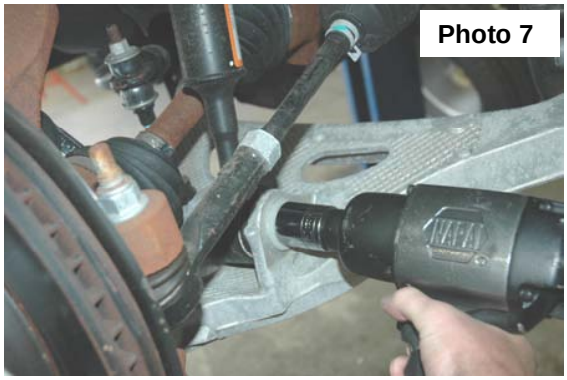



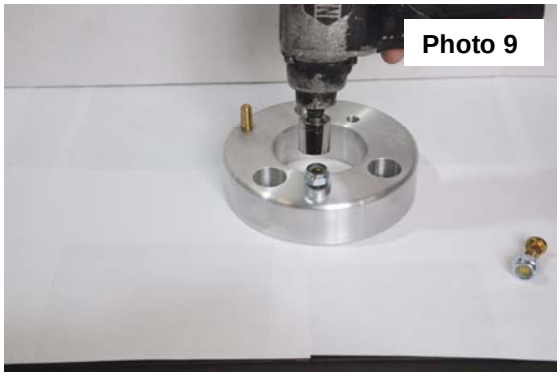

2009-2013 F-150 Strut Spacers
Insert studs into A and B spacers

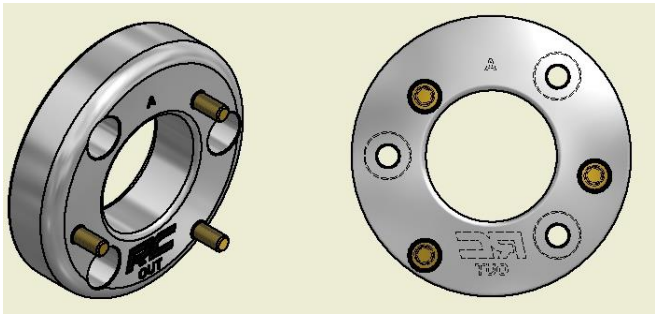

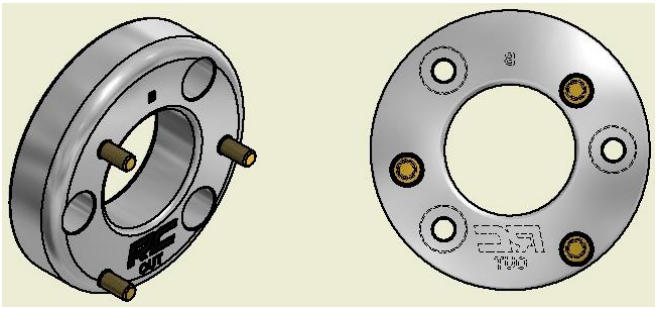

10. Install the new strut spacer on the strut, using stock hardware and 9/16ò socket. Torque to 30 ft/lbs. **See Photo 11**. Install the strut assembly into the strut tower and secure with the supplied 10mm lock nuts using a 17mm wrench. Torque to 30 ft/lbs.

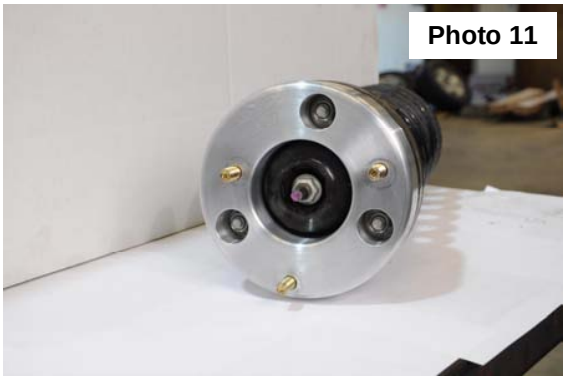



11. On 04-13 models install the lower strut bolt in the original position that it was removed. Using a 29mm socket, and 1 1/16ò wrench, torque to factory specs. **See Photo 13.**

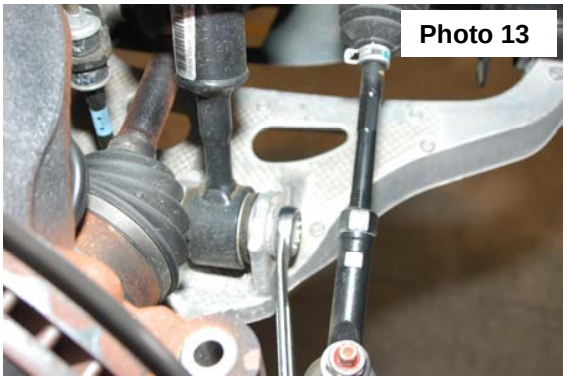

12. Using a floor jack, raise the lower control arm and connect the upper ball joint on the upper control arm to the spindle. Using a 21mm wrench, torque to manufacturer specs. If ball joint turns while tightening, use a 3/8ò wrench to hold the ball joint.
13. Reinstall the steering linkage nut using a 21mm wrench.
14. Repeat steps 3-13 on opposite side of vehicle.
15. Using a 15mm wrench, reinstall sway bar bushings and nut using factory hardware. Torque to factory specs.
16. Install the wheels / tires, using a 21mm deep well socket.
17. If removed, reconnect the EPAS plugs.
18. Jack up the vehicle and remove the jack stands. Lower the vehicle to the floor and torque all bolts to factory specifications.
19. Vehicle will have to have a front-end alignment.
20. If the rear block kit & shocks was ordered with the kit please proceed to the next section.

REAR INSTALLATION INSTRUCTIONS

1. Chock the front wheels.
2. Jack up the rear of the vehicle and place jack stands underneath the frame rail.
3. Remove the tires and wheels.
4. Remove rear shocks using a 15mm, and 18mm wrench. Save the stock hardware it will be used later.
5. Place the floor jack underneath the axle and remove the stock u-bolts. Lower the axle down to allow the blocks to be installed in between the stock block and the spring perch. Install the new u-bolts and secure with fasteners provided.
6. Assemble the rear shocks 658694, and install in the stock position with stock hardware, using a 15mm and 18mm wrench. **Note: N2.0 shock absorbers are designed to run with the body of the shock absorber on the axle mount and the piston rod on the frame end.**

POST INSTALLATION INSTRUCTIONS

1. Check all fasteners for proper torque. Check to ensure there is adequate clearance between all rotating, mobile, fixed and heated members. Check steering for interference and proper working order. Test brake system.
2. Perform steering sweep. The distance between the tire sidewall and the brake hose must be checked closely. Cycle the steering from full turn to full turn to check for clearance. Failure to perform inspections may result in component failure.
3. Re torque all fasteners after 500 miles. Visually inspect components and re torque fasteners during routine vehicle service.
4. Readjust headlights to proper settings.

MAINTENANCE INFORMATION

It is the ultimate buyers responsibility to have all bolts/nuts checked for tightness after the first 500 miles and then every 1000 miles. Wheel alignment steering system, suspension and driveline systems must be inspected by a qualified professional mechanic at least every 3000 miles



Thank you for purchasing a Rough Country Suspension System.

By purchasing any item sold by Rough Country, LLC, the buyer expressly warrants that he/she is in compliance with all applicable Federal, State, and Local laws and regulations regarding the purchase, ownership, and use of the item. It shall be the buyers responsibility to comply with all Federal, State and Local laws governing the sales of any items listed, illustrated or sold. The buyer expressly agrees to indemnify and hold harmless Rough Country, LLC for all claims resulting directly or indirectly from the purchase, ownership, or use of the items.