TRAIL FORTRESS

BUILT FOR THE TRAIL. CHECKED FOR YOUR TRUCK.

Rough Country 51216W Installation Instructions

Tubular Winch Front Bumper for Ford F-150 (2021-2023)

Part number: 51216W

trailfortress.com/tubular-winch-front-bumper-ford-f150-rough-country-51216w

Scan for fitment, price and install help

Front Bumper | Tubular | Ford 150 (21-23)

Thank you for choosing Rough Country for all your vehicle needs.

Please read instructions before beginning installation. Check the kit hardware against the kit contents shown below. Be sure you have all needed parts and know where they go.

If question exist, please call us @1-800-222-7023. We will be happy to answer any questions concerning this product. Check all fasteners for proper torque. Check to ensure for adequate clearance between all components. Periodically check all hardware for tightness.

PARTS LIST:

1	Bumper Base	6	Foam Washer 15.5mm x 25mm x 2mm
1	DS/left Shackle Mount	6	Plastic Plug (Without sensors) (PP)
1	PS/right Shackle Mount	6	20mm x 10mm Foam Washer
1	DS/left Bracket Inner Support Bracket	12	Flat Head Self Tapping Screw
1	PS/right Bracket Inner Support Bracket	2	Sensor harness extension
1	DS/left Bracket Outer Support Bracket	1	Allen Wrench S=4
1	PS/right Bracket Outer Support Bracket	1	Allen Wrench S=5
1	PS/Right Mesh Panel	6	12mm Plastic Retainers
1	DS/Left Mesh Panel	14	6-1.00mm x 20mm Combo Bolts
2	12mm Tubular spacers	4	6mm Hex Flange Nuts
2	U-Shaped Cover plates	2	12-1.75mm x 35mm Hex Bolt
1	PS/right 12-1.75mm x 50mm Double-Bolt Plate	2	12-1.75mm x 150mm Hex Bolt
1	DS/left 12-1.75mm x 50mm Double-Bolt Plate	12	12mm x 32mm x 3mm Flat Washers
1	License Plate Bracket	2	12mm Hex Nut
2	License Plate Plastic Inserts	4	12mm Lock Washers
2	12-1.75mm x 50mm Single-Bolt Plate	2	12mm x 24mm x 2.5mm Flat Washers
6	Retaining Cap (PP)	8	12mm Nylon Lock Nut

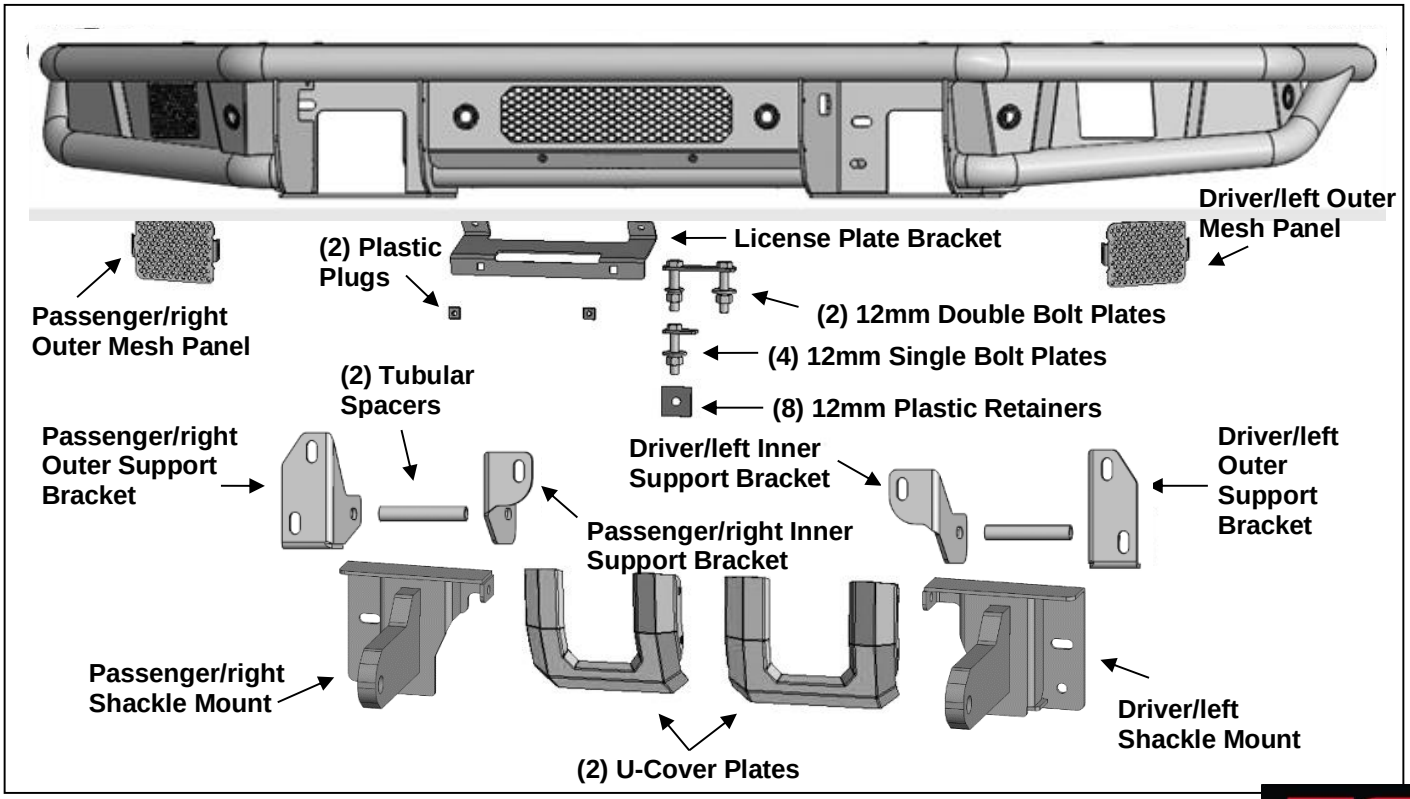

trailfortress.com/tubular-winch-front-bumper-ford-f150-rough-country-51216w

TOOLS REQUIRED

 Rachet	 13 & 19mm Socket	 Extensions	 Wrench

1 Follow (Fig 1 – 9) to remove factory bumper and wiring harness to prepare vehicle for LD Bumper installation.



(Fig 1) Remove license plate from Bumper



Front

(Fig 2) Remove the plastic bumper pad from the front of the Bumper

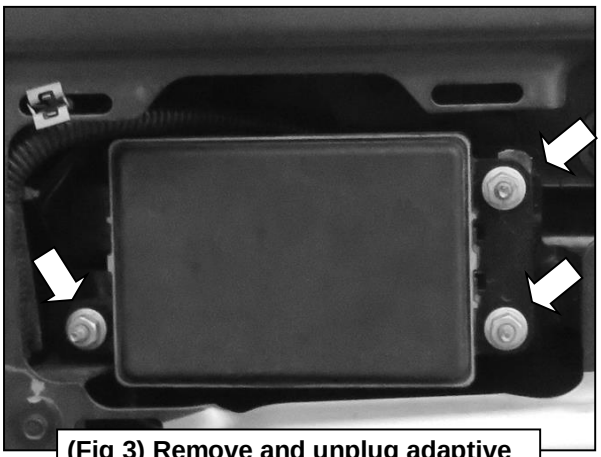

(Fig 3) Remove and unplug adaptive cruise control from driver/left side of frame, if equipped

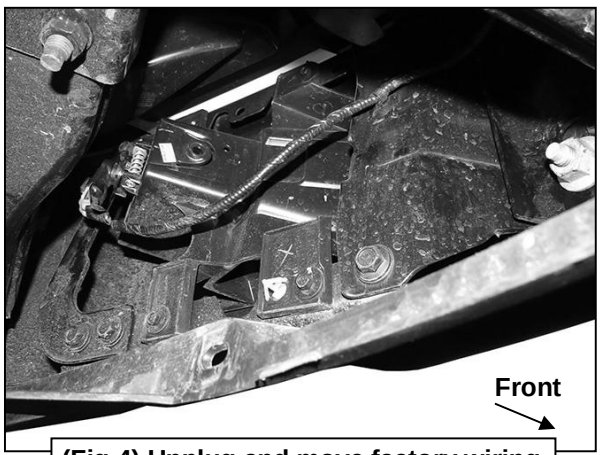

Front

(Fig 4) Unplug and move factory wiring harness for fog lights (if equipped)

trailfortress.com/tubular-winch-front-bumper-ford-f150-rough-country-51216w

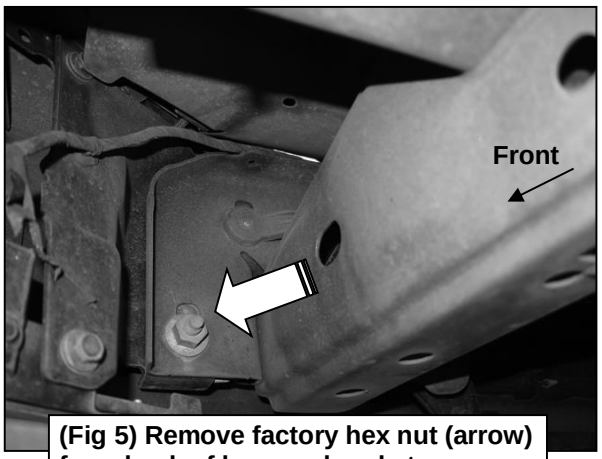

(Fig 5) Remove factory hex nut (arrow) from back of bumper bracket

WARNING! Do not remove bumper bolts unless the bumper is properly supported on blocks or stands or it may fall.

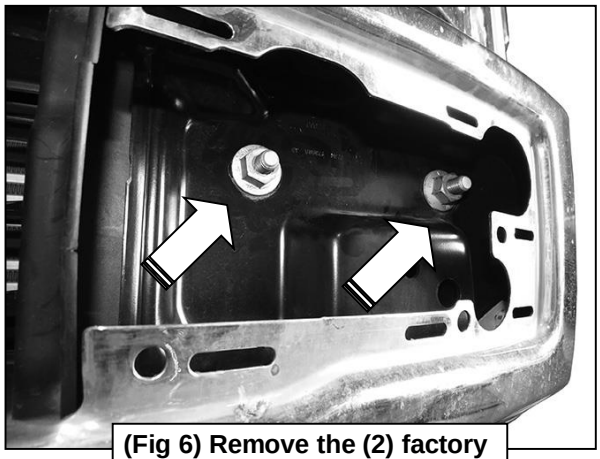

(Fig 6) Remove the (2) factory hex nuts from each side

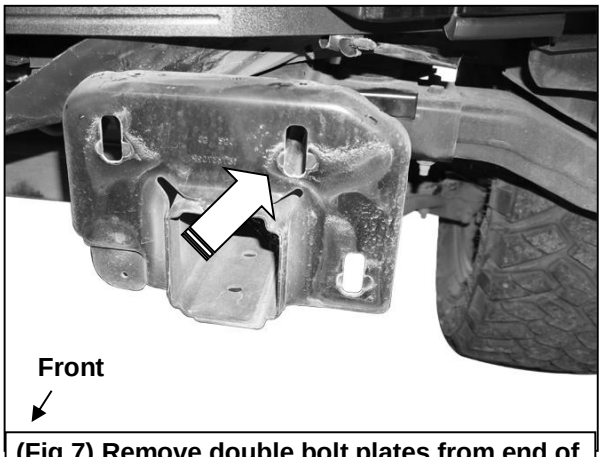

(Fig 7) Remove double bolt plates from end of frame (driver/left side end of frame pictured)



(Fig 8) Optional, remove the factory frame extensions, if equipped

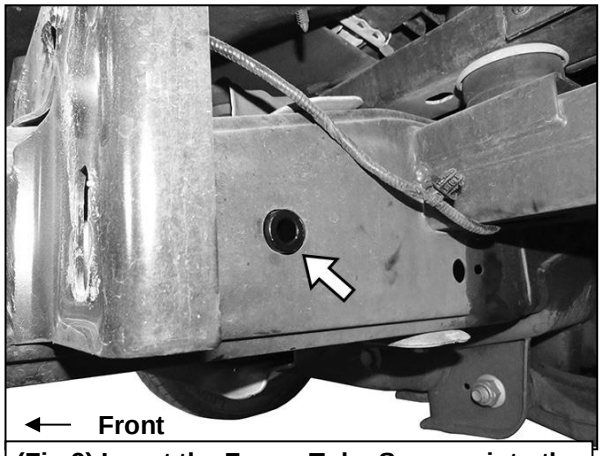

(Fig 9) Insert the Frame Tube Spacers into the holes in the frame. Driver/left side pictured

trailfortress.com/tubular-winch-front-bumper-ford-f150-rough-country-51216w

2

Follow (Fig 10 – 24) to attach Brackets and Sensors or Plastic Plugs, prepare Bumper for installation, then attach Bumper to Brackets. Ensure Bolts are hand tightened at this point.

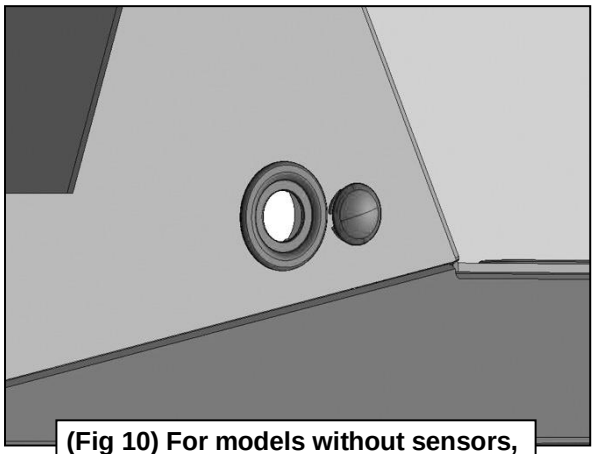

(Fig 10) For models without sensors, push Plastic Plug into sensor mount

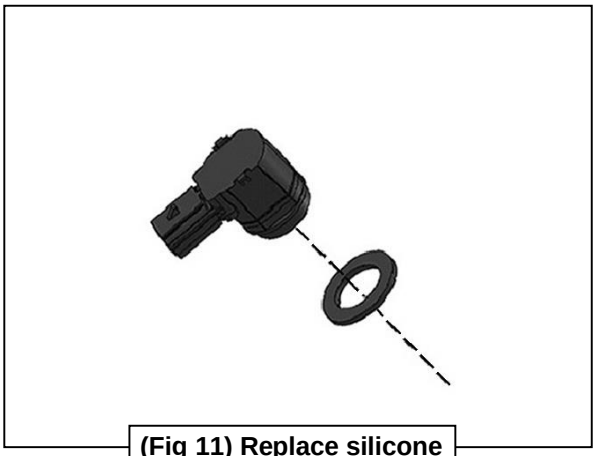

(Fig 11) Replace silicone seal with large Seal

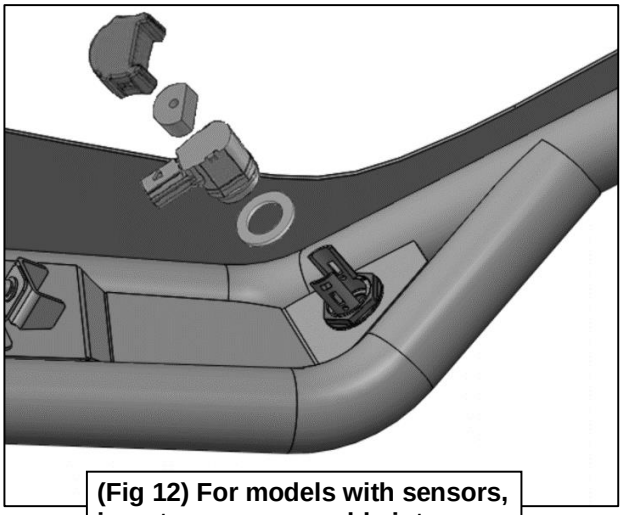

(Fig 12) For models with sensors, insert sensor assembly into sensor mount on back of Bumper

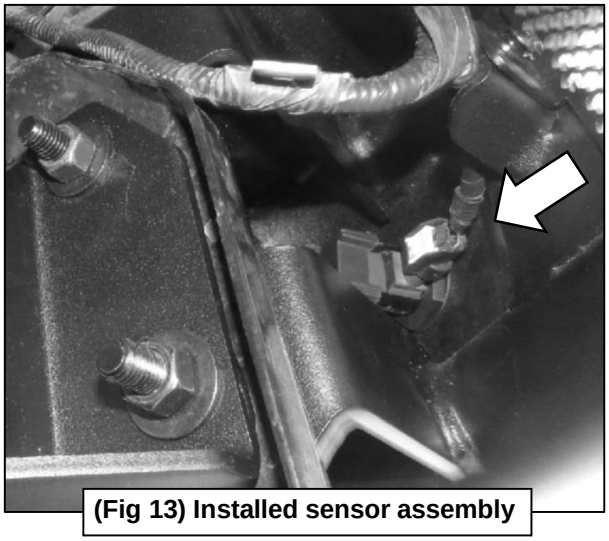

(Fig 13) Installed sensor assembly

trailfortress.com/tubular-winch-front-bumper-ford-f150-rough-country-51216w

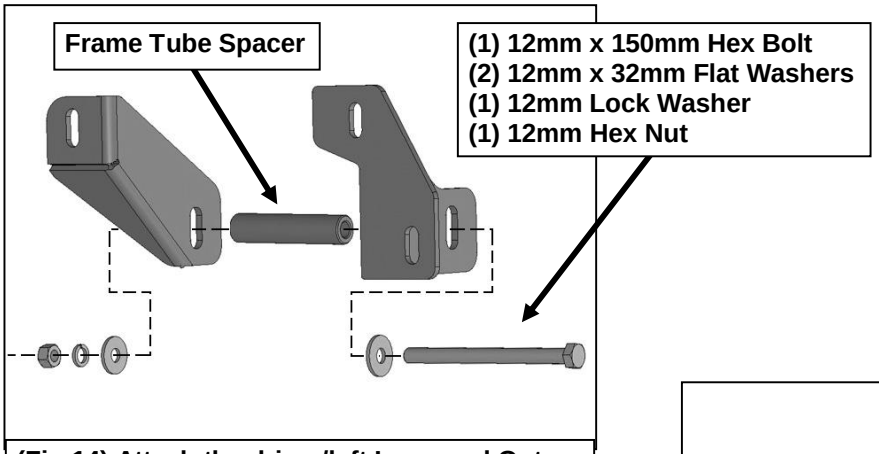

(Fig 14) Attach the driver/left Inner and Outer Support Brackets to the sides of the frame

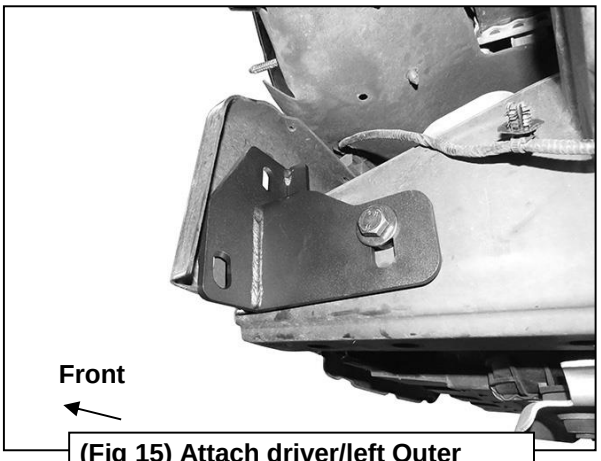

(Fig 15) Attach driver/left Outer Support Bracket to outside of frame

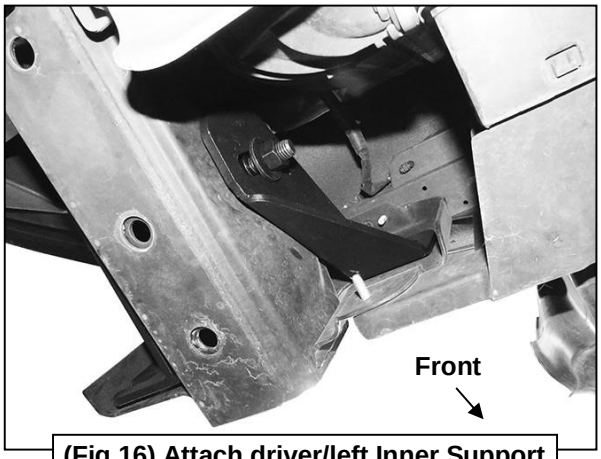

(Fig 16) Attach driver/left Inner Support Bracket to inner side of frame

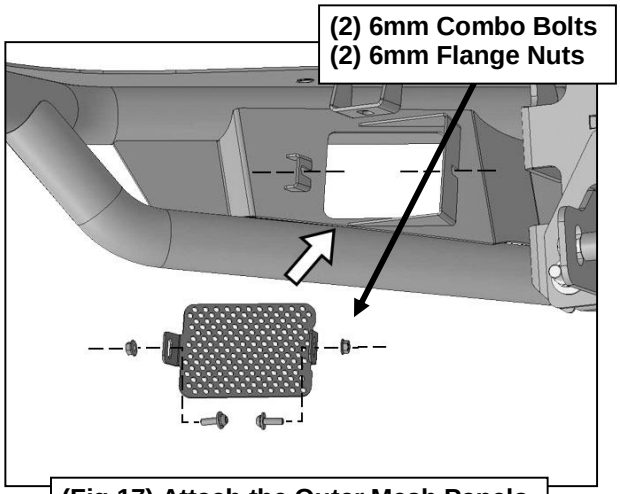

(Fig 17) Attach the Outer Mesh Panels to the tabs on the back of the Bumper

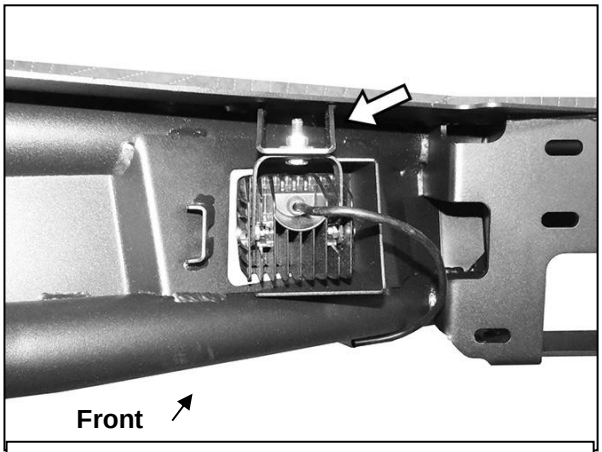

(Fig 18) Attach the cube light (not included) to the tab on the back of the Bumper

trailfortress.com/tubular-winch-front-bumper-ford-f150-rough-country-51216w

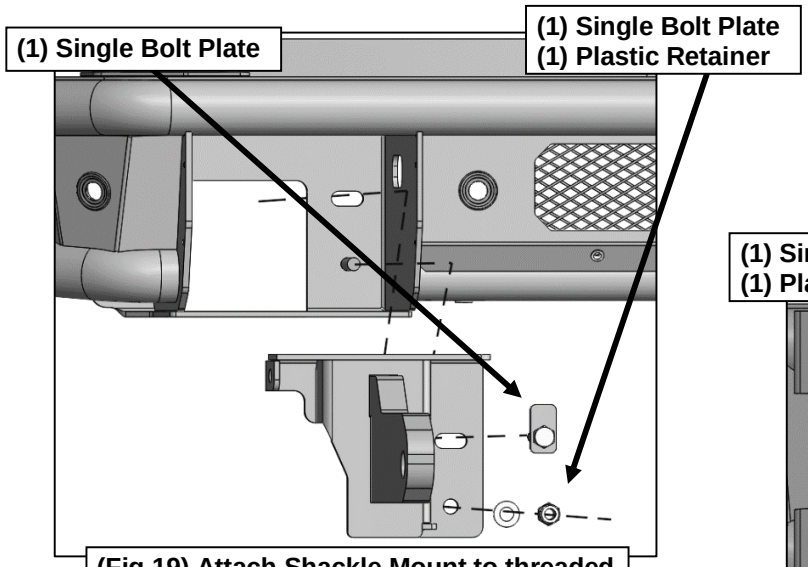

(Fig 19) Attach Shackle Mount to threaded stud on Bumper. Insert Single Bolt Plate through top inner mounting slot

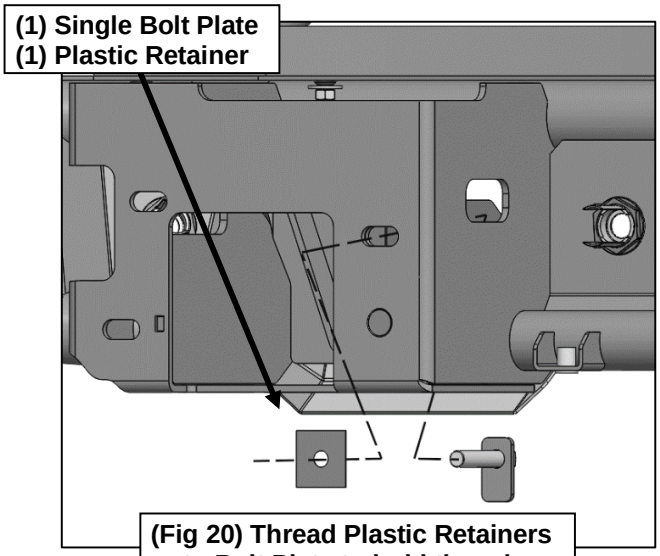

(Fig 20) Thread Plastic Retainers onto Bolt Plate to hold them in place for Bumper installation

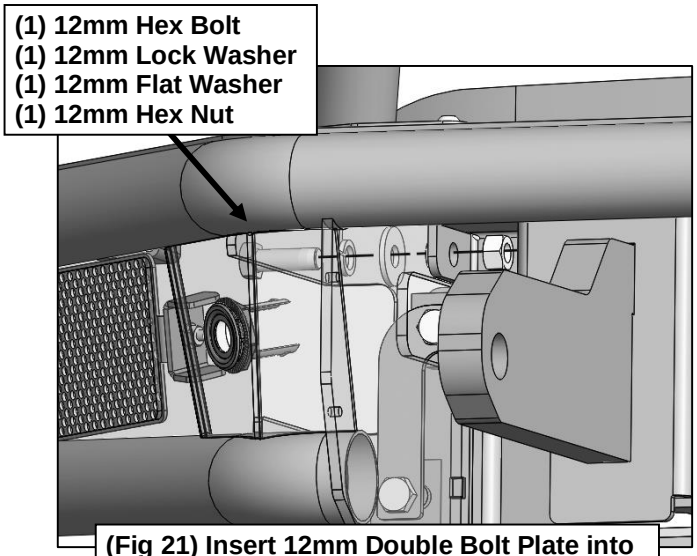

(Fig 21) Insert 12mm Double Bolt Plate into outer slots in Shackle Mount and Bumper

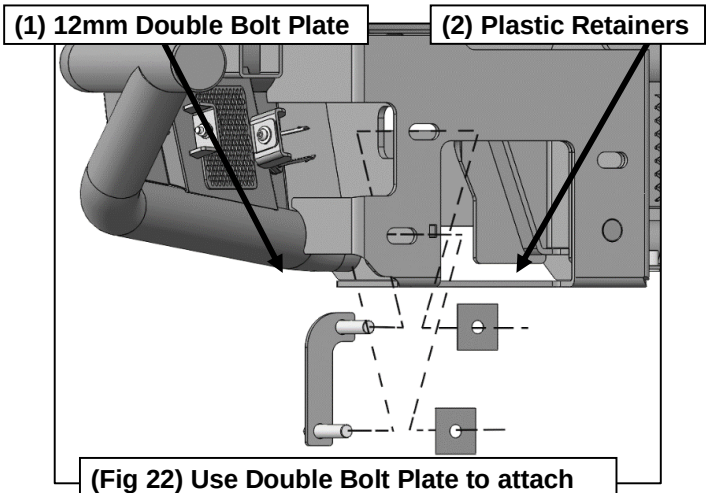

(Fig 22) Use Double Bolt Plate to attach Shackle Mount to Bumper. Thread Plastic Retainers onto Bolt Plate to hold them in place for Bumper installation

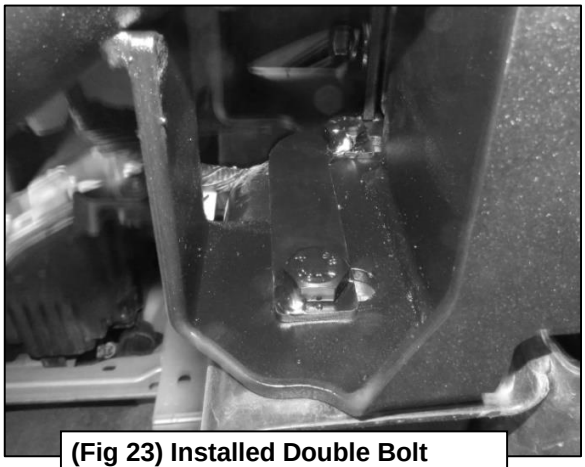

(Fig 23) Installed Double Bolt Plate. Picture from behind Bumper

trailfortress.com/tubular-winch-front-bumper-ford-f150-rough-country-51216w

3

Follow (Fig 24 – 30) to attach U-Covers and License Plate Bracket to Bumper. Ensure Bumper is level, then tighten all hardware.

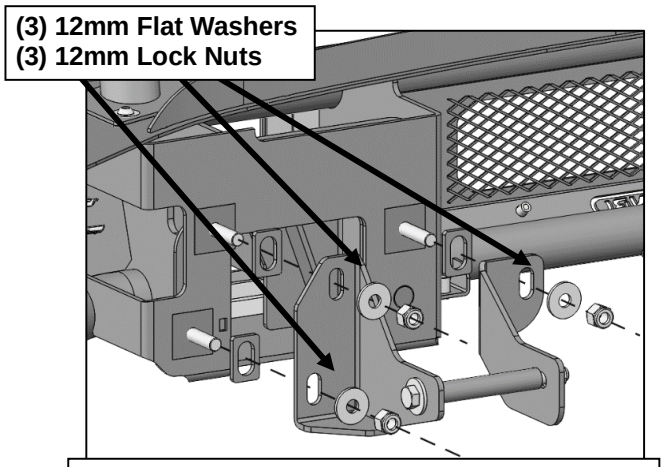

(Fig 24) Hold Bumper up to end of frame. Guide Bolt Plates in Bumper through bumper bracket on frame and Support Brackets

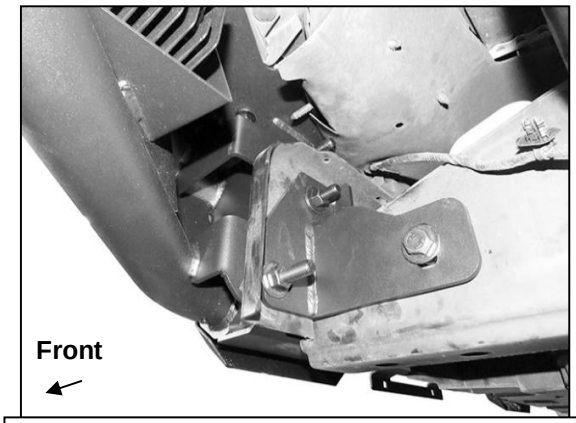

(Fig 25) Driver/left side of Bumper installed. Pictured from behind Bumper

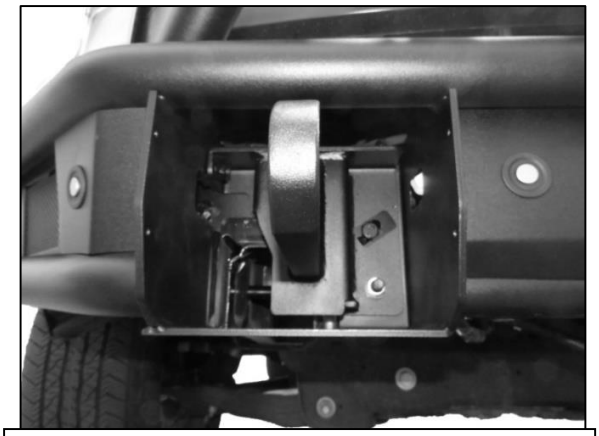

(Fig 26) Driver/left side of Bumper installed (cube light pictured not included)

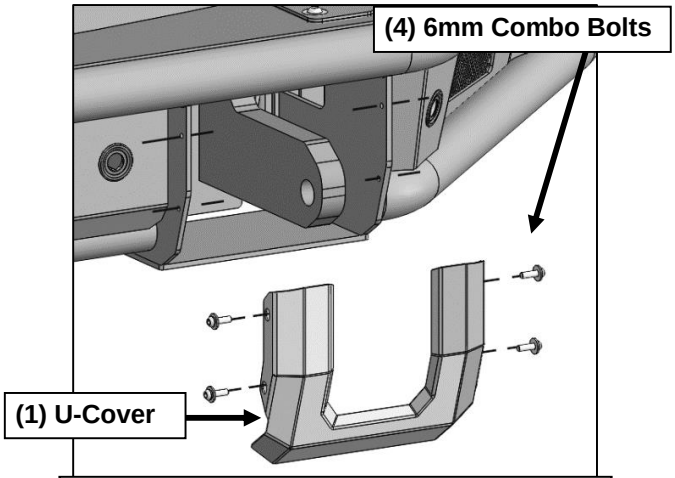

(Fig 27) Once Bumper is fully installed and hardware fully tightened, install U-Covers

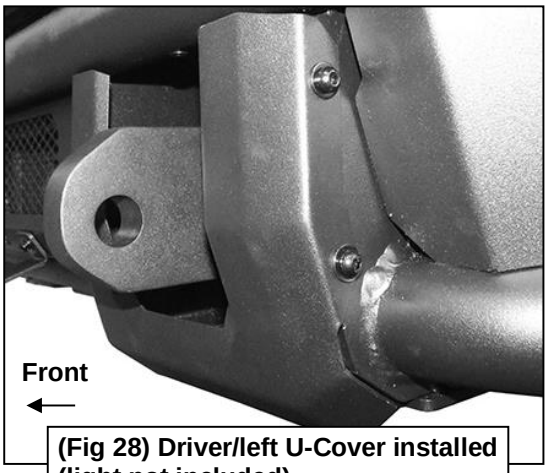

(Fig 28) Driver/left U-Cover installed (light not included)

trailfortress.com/tubular-winch-front-bumper-ford-f150-rough-country-51216w

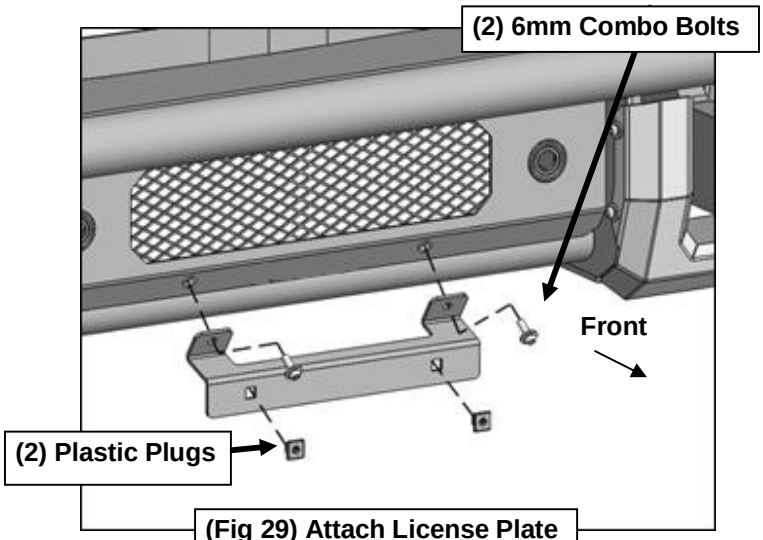

(Fig 29) Attach License Plate Bracket to front of Bumper

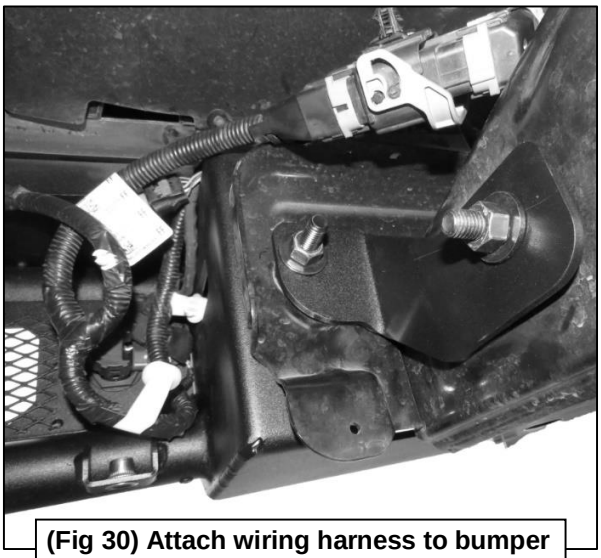

(Fig 30) Attach wiring harness to bumper and attach light connections if necessary

4

Ensure Bumper is level and all fasteners are tightened at this point, then ensure all connections are secure. Installation is complete. Do periodic inspections to the installation to make sure that all hardware is secure and tight.

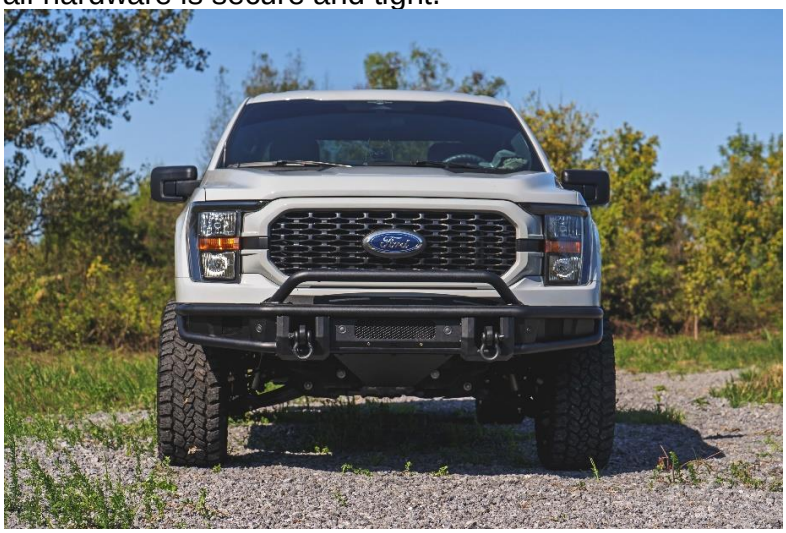

By purchasing any item sold by Rough Country, LLC, the buyer expressly warrants that he/she is in compliance with all applicable, State, and Local laws and regulations regarding the purchase, ownership, and use of the item. It shall be the buyers responsibility to comply with all Federal, State and Local laws governing the sales of any items listed, illustrated or sold. The buyer expressly agrees to indemnify and hold harmless Rough Country, LLC for all claims resulting directly or indirectly from the purchase, ownership, or use of the items.

trailfortress.com/tubular-winch-front-bumper-ford-f150-rough-country-51216w