TRAIL FORTRESS

BUILT FOR THE TRAIL. CHECKED FOR YOUR TRUCK.

Rough Country 51214W Installation Instructions

Tubular Winch-Tray Front Bumper for Ram 1500 (2019-2024)

Part number: 51214W

trailfortress.com/tubular-winch-tray-front-bumper-ram-1500-rough-country-51214w

Scan for fitment, price and install help

ROUGH COUNTRY SUSPENSION SYSTEMS®

Tubular Front Bumper | Ram 1500 (19-24)

Thank you for choosing Rough Country for all your vehicle needs.

Please read instructions before beginning installation. Check the kit hardware against the kit contents shown below. Be sure you have all needed parts and know where they go.

If question exist, please call us @1-800-222-7023. We will be happy to answer any questions concerning this product. Check all fasteners for proper torque. Check to ensure for adequate clearance between all components. Periodically check all hardware for tightness.

PARTS LIST:

Qty	Item Description	Qty	Item Description
1	Front Bumper	6	D19 Collision Proof Adhesive Pellets
1	DS/left Shackle Mount	12	ST4_15 Flat Head Self Tapping Screw
1	PS/right Shackle Mount	6	Plastic Plug (Without sensors) (PP)
1	DS/left Support Bracket	6	20mm x 10mm Foam Washer
1	PS/right Support Bracket	6	Retaining Cap (PP)
1	License Plate Bracket	6	15.5mm x 25mm x 2mm Foam Washer
2	U-Shaped Cover plate	1	Allen Wrench S=4
1	DS/left Bracket 1	14	6mm x 20mm Combo Bolts
1	PS/right Bracket 1	4	6mm Hex Flange Nuts
1	DS/Left fill in Mesh Panel	2	12-1.75mm x 40mm Hex Bolt
1	PS/Right fill in Mesh Panel	2	12-1.75mm x 50mm Hex Bolt
1	DS/left Bracket 2	4	12mm x 24mm x 2.5mm Flat Washers
1	PS/right Bracket 2	18	12mm Lock Washers
1	DS/left Bracket 3	28	12mm x 32mm x 3mm Flat Washers
1	PS/right Bracket 3	8	12-1.75mm x 90mm Hex Bolt
2	12-1.75mm x 60mm Single-Bolt Plate	18	12mm Hex Nuts
2	12-1.75mm x 60mm Double-Bolt Plate	4	14-2.00mm x 40mm Hex Bolts
2	14mm Nut plate	2	14-2.00mm x 60mm Hex Bolts
2	Spacer 2	6	14mm Lock Washers
8	12mm Plastic Retainers	6	14mm x 28mm x 2.5mm Flat Washers
2	Sensor harness extension	2	12mm Nylon Lock Nuts
2	License plate plastic plugs		

trailfortress.com/tubular-winch-tray-front-bumper-ram-1500-rough-country-51214w

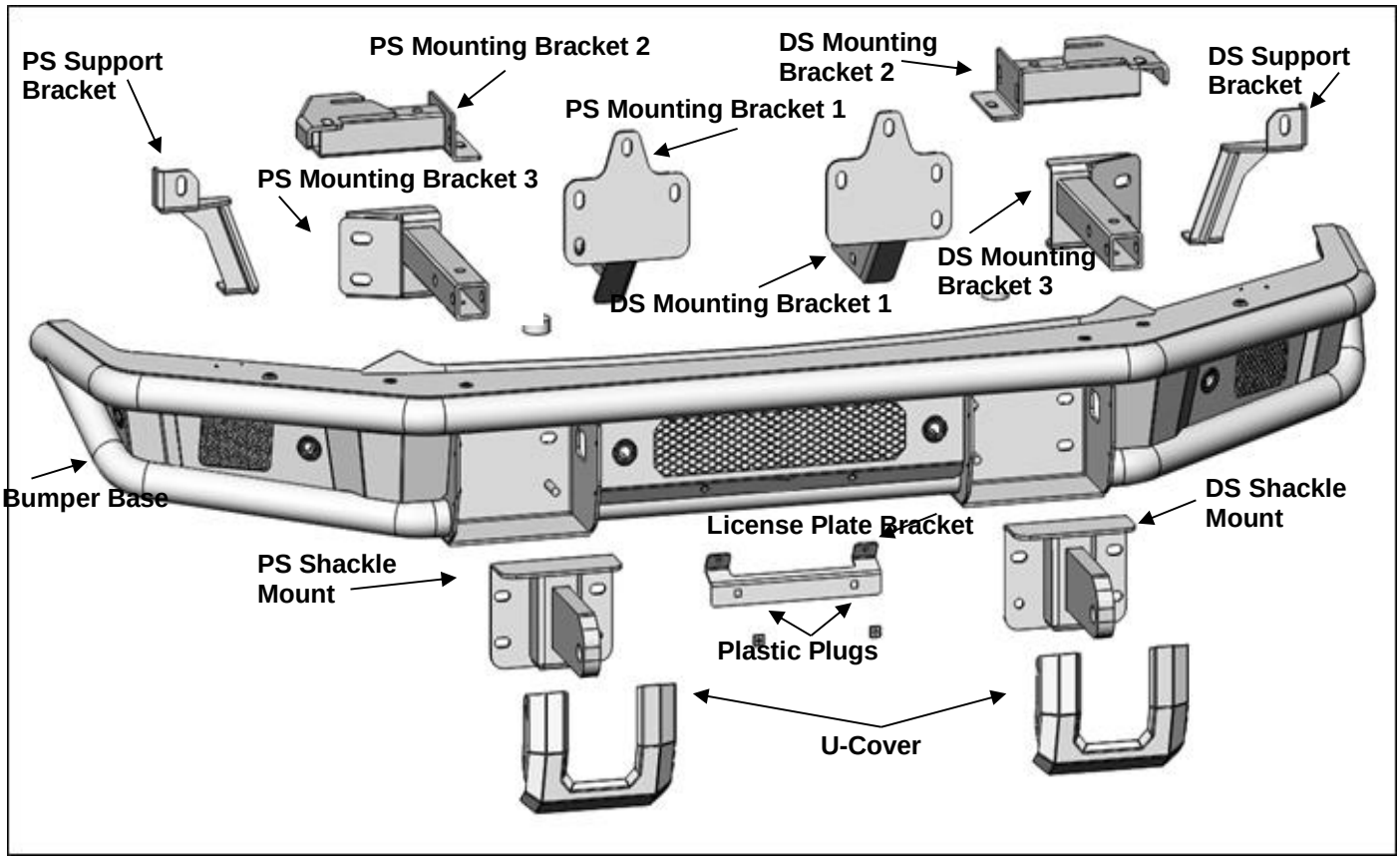

TOOLS REQUIRED

 Rachet	 Sockets	 Extensions	 Wrench

1 Follow (Fig 1 – 11) to remove factory bumper and prepare vehicle and Bumper for Bumper installation.

trailfortress.com/tubular-winch-tray-front-bumper-ram-1500-rough-country-51214w

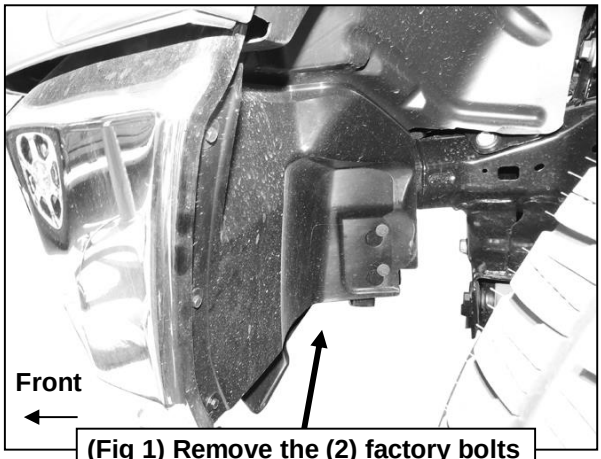

(Fig 1) Remove the (2) factory bolts attaching the side of the bumper to the frame (Driver/left side pictured)

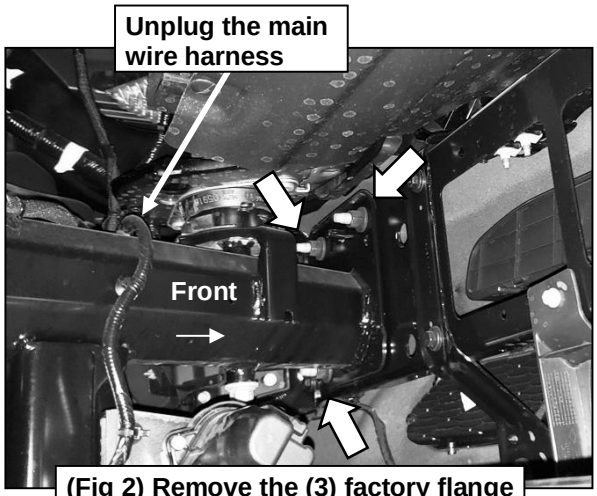

(Fig 2) Remove the (3) factory flange nuts from the driver/left side frame

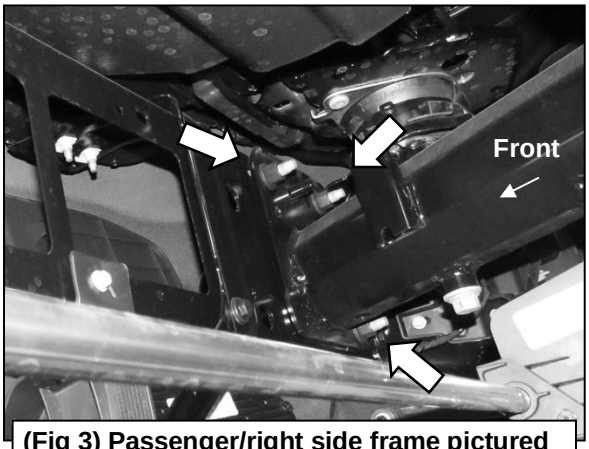

(Fig 3) Passenger/right side frame pictured

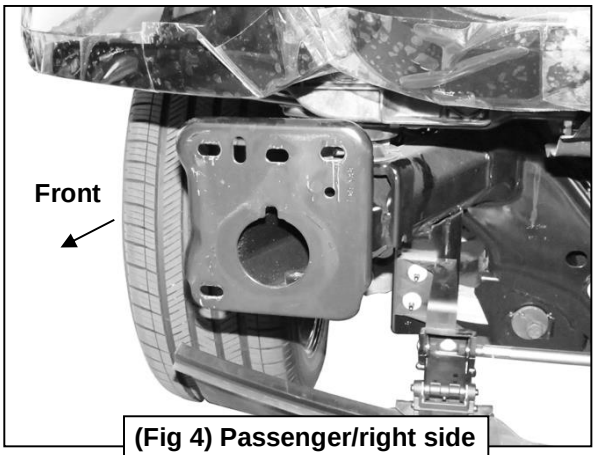

(Fig 4) Passenger/right side Frame mounting location

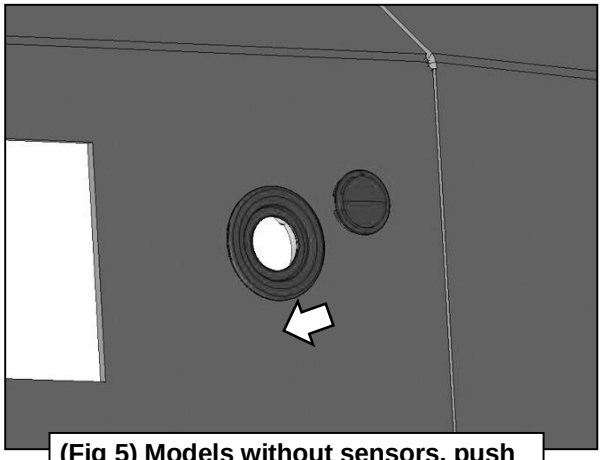

(Fig 5) Models without sensors, push Plastic Plugs into the sensor mounts

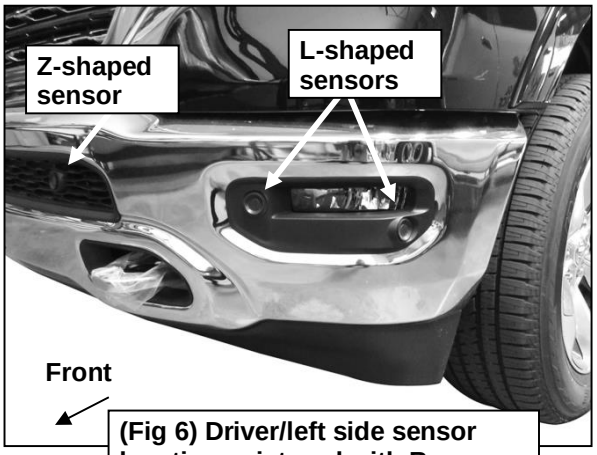

(Fig 6) Driver/left side sensor locations pictured with Bumper on for instruction purposes only

trailfortress.com/tubular-winch-tray-front-bumper-ram-1500-rough-country-51214w

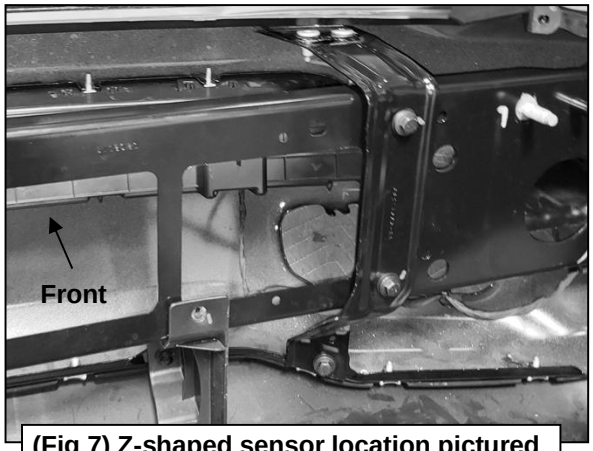

(Fig 7) Z-shaped sensor location pictured behind passenger/right side of bumper

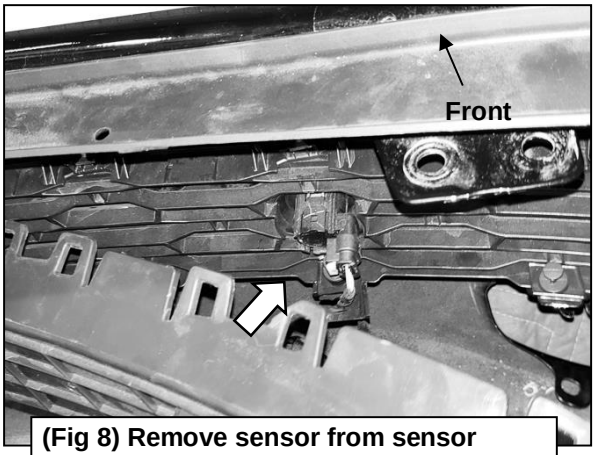

(Fig 8) Remove sensor from sensor sleeve (Passenger/right inner Z-shaped sensor pictured from behind bumper)



(Fig 9) Outer L-shaped sensor pictured



(Fig 10) Remove factory sealing washer from sensor and place (1) Foam Washer over the sensor (Inner Z-shaped sensor pictured)

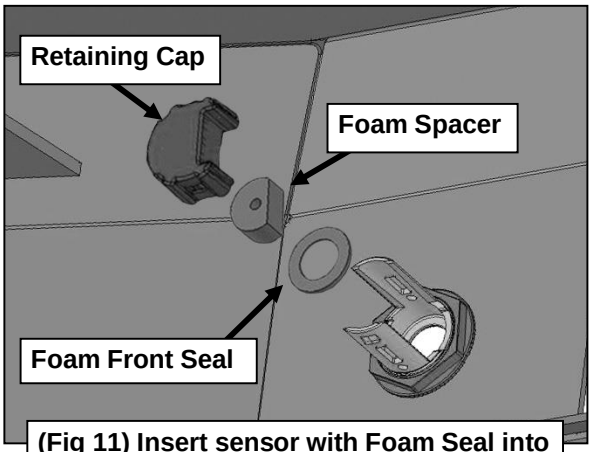

(Fig 11) Insert sensor with Foam Seal into sensor Mount. Place Foam Spacer onto sensor. Snap Cap onto sensor and Mount

trailfortress.com/tubular-winch-tray-front-bumper-ram-1500-rough-country-51214w

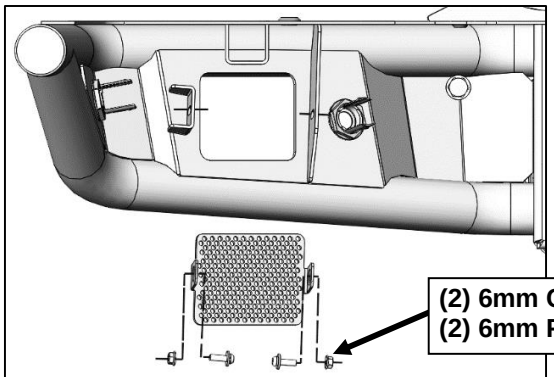

(Fig 12) Attach Fill in Mesh Panel and attach Cube light (not included)

2

Follow (Fig 13 – 19) to attach Mounting Brackets 1, 2, & 3 to vehicle, then attach Mounting Brackets to each other. Ensure hardware is hand tightened at this point.

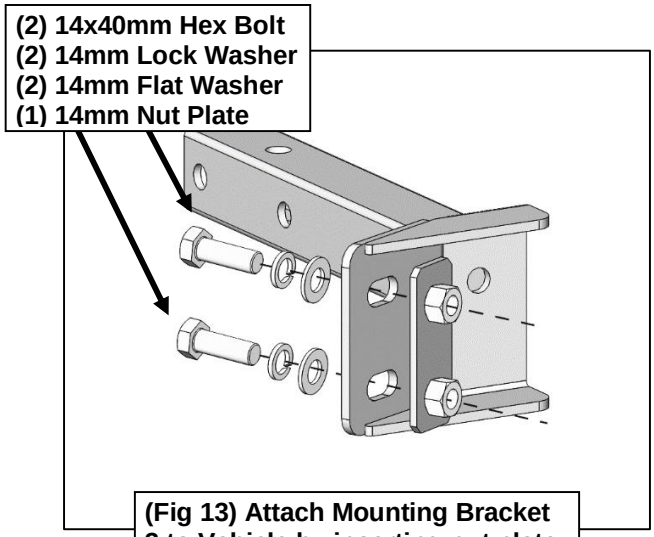

(Fig 13) Attach Mounting Bracket 3 to Vehicle by inserting nut plate

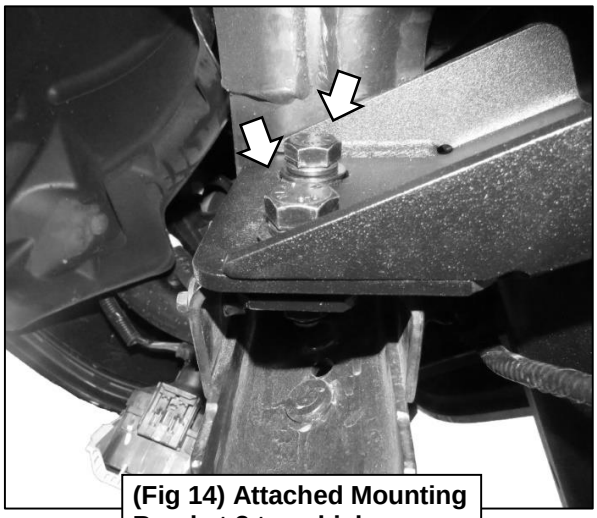

(Fig 14) Attached Mounting Bracket 3 to vehicle

trailfortress.com/tubular-winch-tray-front-bumper-ram-1500-rough-country-51214w

(1) 14x60mm Hex Bolt
(1) 14mm Lock Washer
(1) 14mm Flat Washer

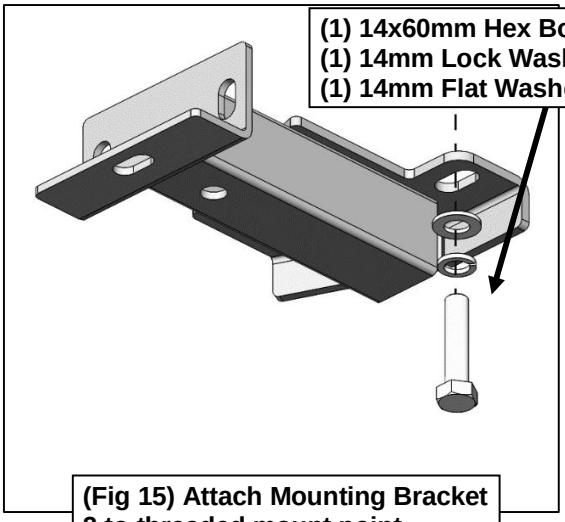

(Fig 15) Attach Mounting Bracket 2 to threaded mount point

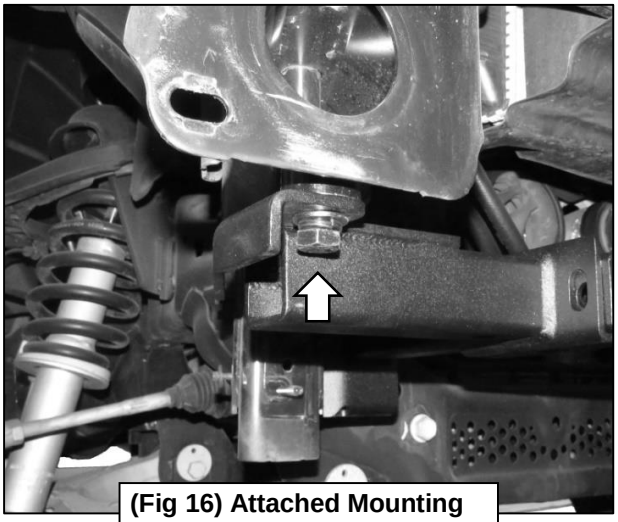

(Fig 16) Attached Mounting Bracket 2 to threaded insert

(2) 12x90mm Hex Bolt
(4) 12mm Flat Washer
(2) 12mm Lock Washer
(2) 12mm Hex Nut

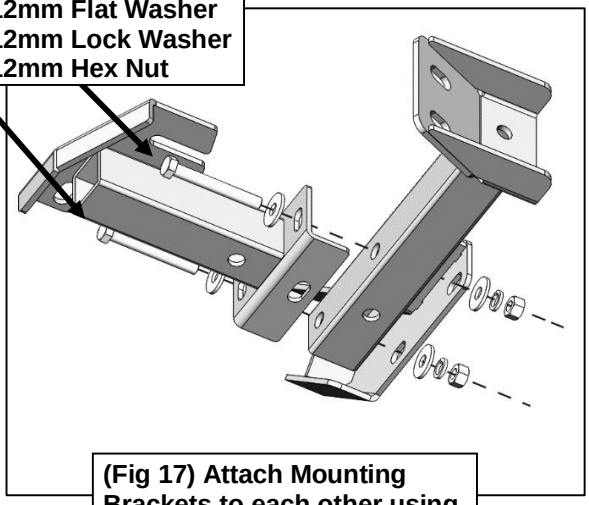

(Fig 17) Attach Mounting Brackets to each other using holes on side of brackets

(1) 12x90mm Hex Bolt
(2) 12mm Flat Washer
(1) 12mm Lock Washer
(1) 12mm Hex Nut

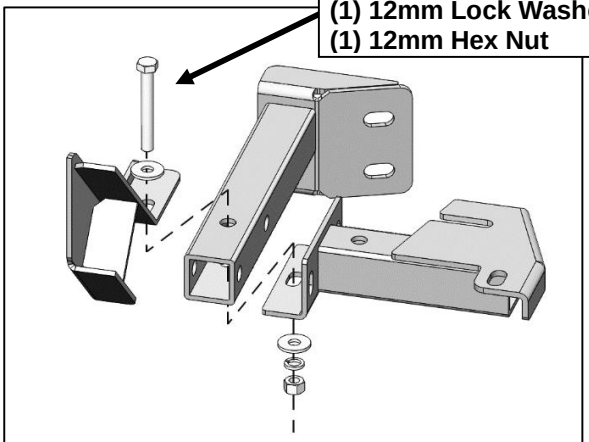

(Fig 18) Attach Mounting Brackets to each other using hole through top of brackets

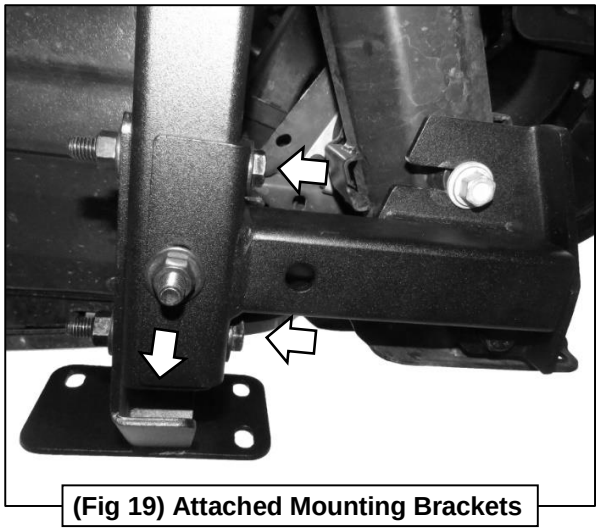

(Fig 19) Attached Mounting Brackets

trailfortress.com/tubular-winch-tray-front-bumper-ram-1500-rough-country-51214w

3

Follow (Fig 20 – 29) to attach Support Brackets, then attach shackle mount to bumper, and bumper to vehicle. Ensure hardware is hand tightened at this point.

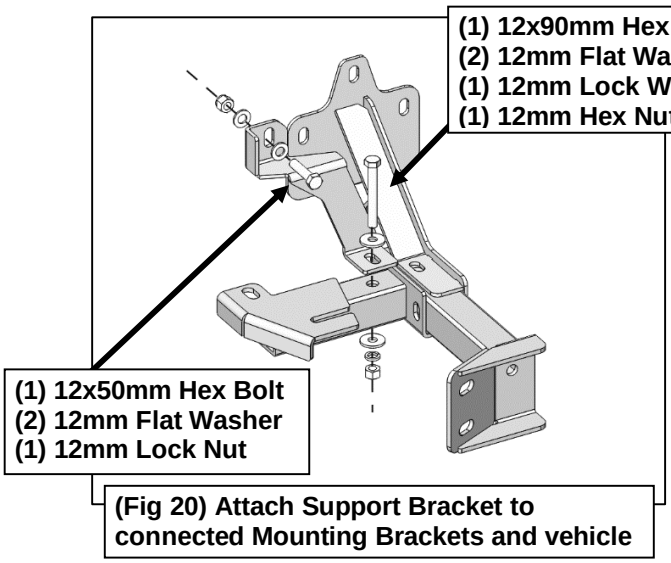

(Fig 20) Attach Support Bracket to connected Mounting Brackets and vehicle

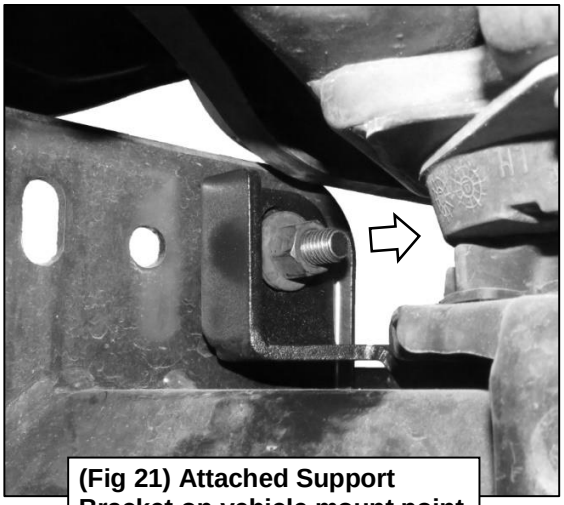

(Fig 21) Attached Support Bracket on vehicle mount point

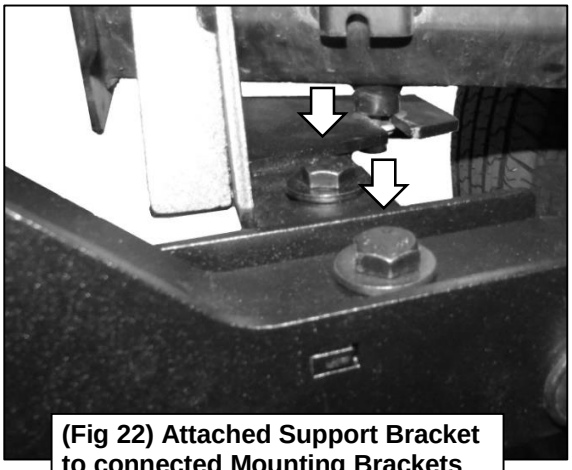

(Fig 22) Attached Support Bracket to connected Mounting Brackets

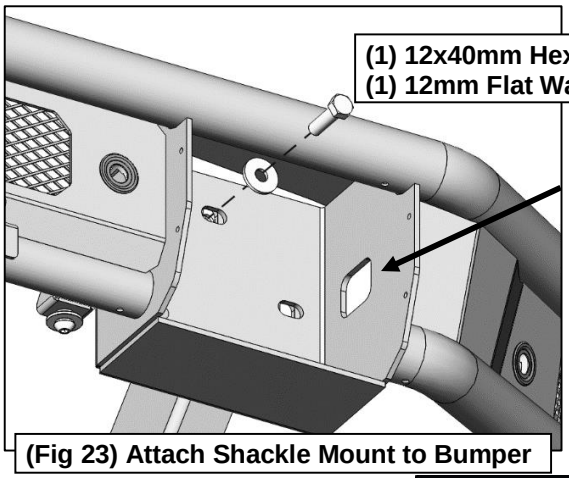

(Fig 23) Attach Shackle Mount to Bumper

trailfortress.com/tubular-winch-tray-front-bumper-ram-1500-rough-country-51214w

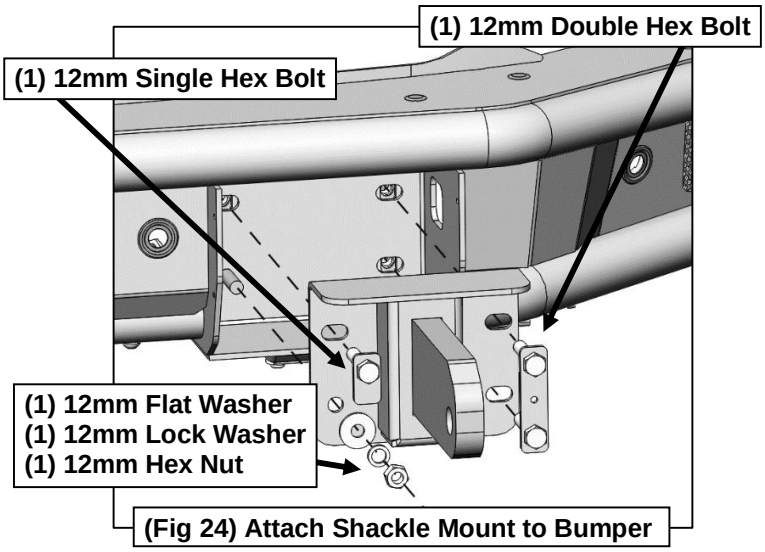

(Fig 24) Attach Shackle Mount to Bumper

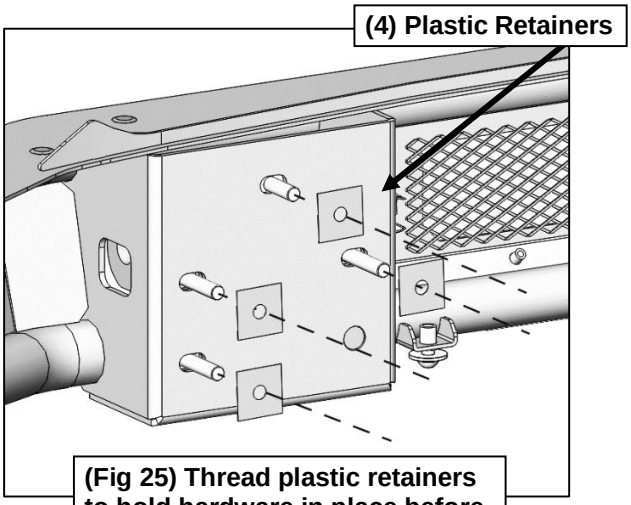

(Fig 25) Thread plastic retainers to hold hardware in place before inserting bumper into place

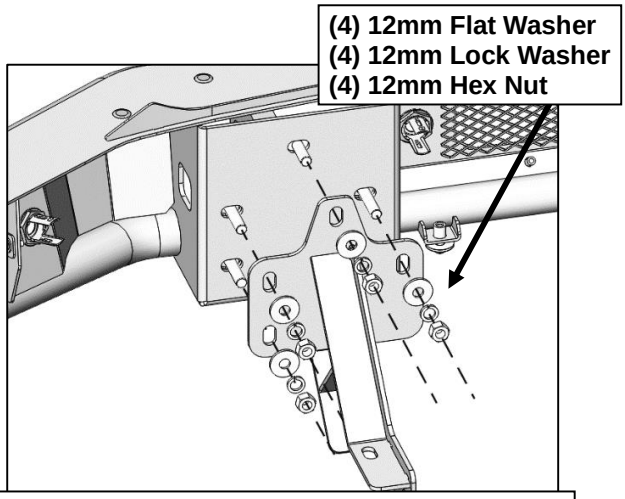

(Fig 26) Attach Bumper to Mounting Bracket 1 by inserting hardware into mounting slots

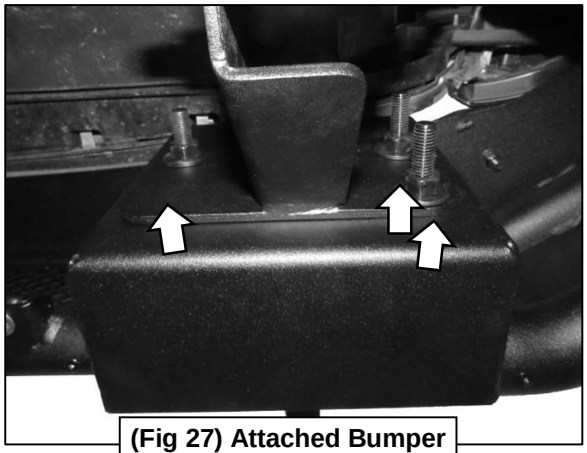

(Fig 27) Attached Bumper to Mounting Bracket 1

trailfortress.com/tubular-winch-tray-front-bumper-ram-1500-rough-country-51214w

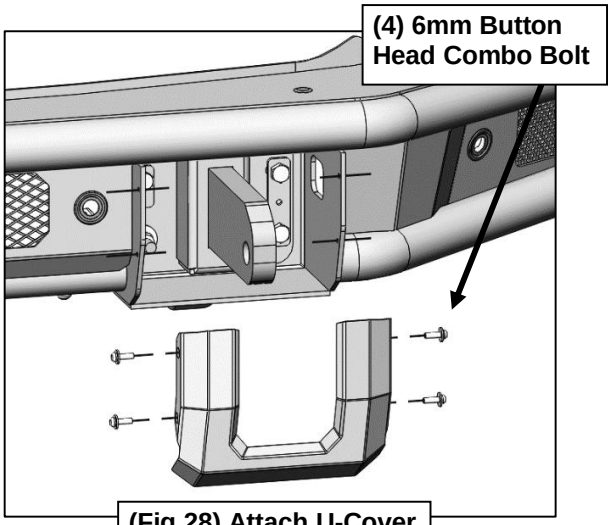

(Fig 28) Attach U-Cover

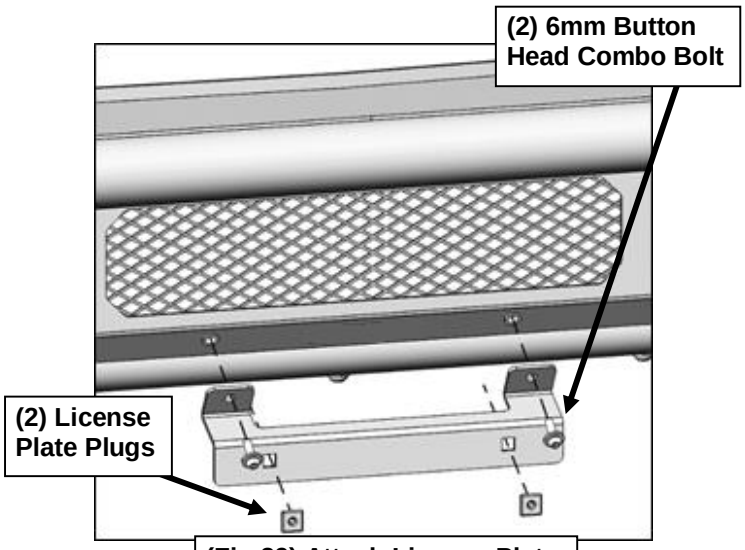

(Fig 29) Attach License Plate Bracket to front of Bumper

4

Ensure Bumper is level and fits properly, adjust as needed and then tighten all hardware and double check all connections. Installation is complete. Do periodic inspections to the installation to make sure that all hardware is secure and tight.

trailfortress.com/tubular-winch-tray-front-bumper-ram-1500-rough-country-51214w


RAM
RC