TRAIL FORTRESS

BUILT FOR THE TRAIL. CHECKED FOR YOUR TRUCK.

Rough Country 51141 Installation Instructions

SRL2 Adjustable Aluminum Step Rail for F-150 Crew Cab

Part number: 51141

trailfortress.com/rough-country-srl2-adj-aluminum-step-51141

Scan for fitment, price and install help

921520010

ROUGH COUNTRY
SUSPENSION SYSTEMS®

FORD 2015-21 F-150/F-250 Aluminum Step Extrusion Brackets

Thank you for choosing Rough Country for all your vehicle needs.

Please read instructions before beginning installation. Check the kit hardware against the kit contents shown below. Be sure you have all needed parts and know where they go.
If question exist, please call us @1-800-222-7023. We will be happy to answer any questions concerning this product.
Check all fasteners for proper torque. Check to ensure for adequate clearance between all components.
Periodically check all hardware for tightness.

Kit Contents:
Aluminum Rails x2
Aluminum Steps x2
End Caps x4
Dr Side Brackets x3
Pass Side Brackets x3

Tools Needed:
5mm Allen Wrench
13mm Socket/Wrench

Hardware Included:
8mm x 25mm Bolts x36
8mm Button Head Bolts x12
8mm Lock Nuts x36
8mm Lock Nuts (for Body) x18
8mm Finish Nut (Coated) x12
8mm Oversized Washers x18



Torque Specs:

Size	Grade 5	Grade 8	Size	Class 8.8	Class 10.9
5/16”	15 ft/lbs	20ft/lbs	6MM	5ft/lbs	9ft/lbs
3/8”	30 ft/lbs	35ft/lbs	8MM	18ft/lbs	23ft/lbs
7/16”	45 ft/lbs	60ft/lbs	10MM	32ft/lbs	45ft/lbs
1/2”	65 ft/lbs	90ft/lbs	12MM	55ft/lbs	75ft/lbs
9/16”	95 ft/lbs	130ft/lbs	14MM	85ft/lbs	120ft/lbs
5/8”	135ft/lbs	175ft/lbs	16MM	130ft/lbs	165ft/lbs
3/4”	185ft/lbs	280ft/lbs	18MM	170ft/lbs	240ft/lbs

INSTALLATION INSTRUCTIONS

1. Assemble the following components starting from one end and working your way across.
   NOTE: When installing the steps, the bolts will need to be installed on the step first and then slid into the rail.
2. Install the coated finish nuts on the end for the end caps.
3. Do not fully tighten any of the hardware until the steps are in the desired location.
4. Use a 13mm socket/wrench on the nuts and a 5mm Allen wrench on the button head bolts.
5. Passenger side is mirrored.

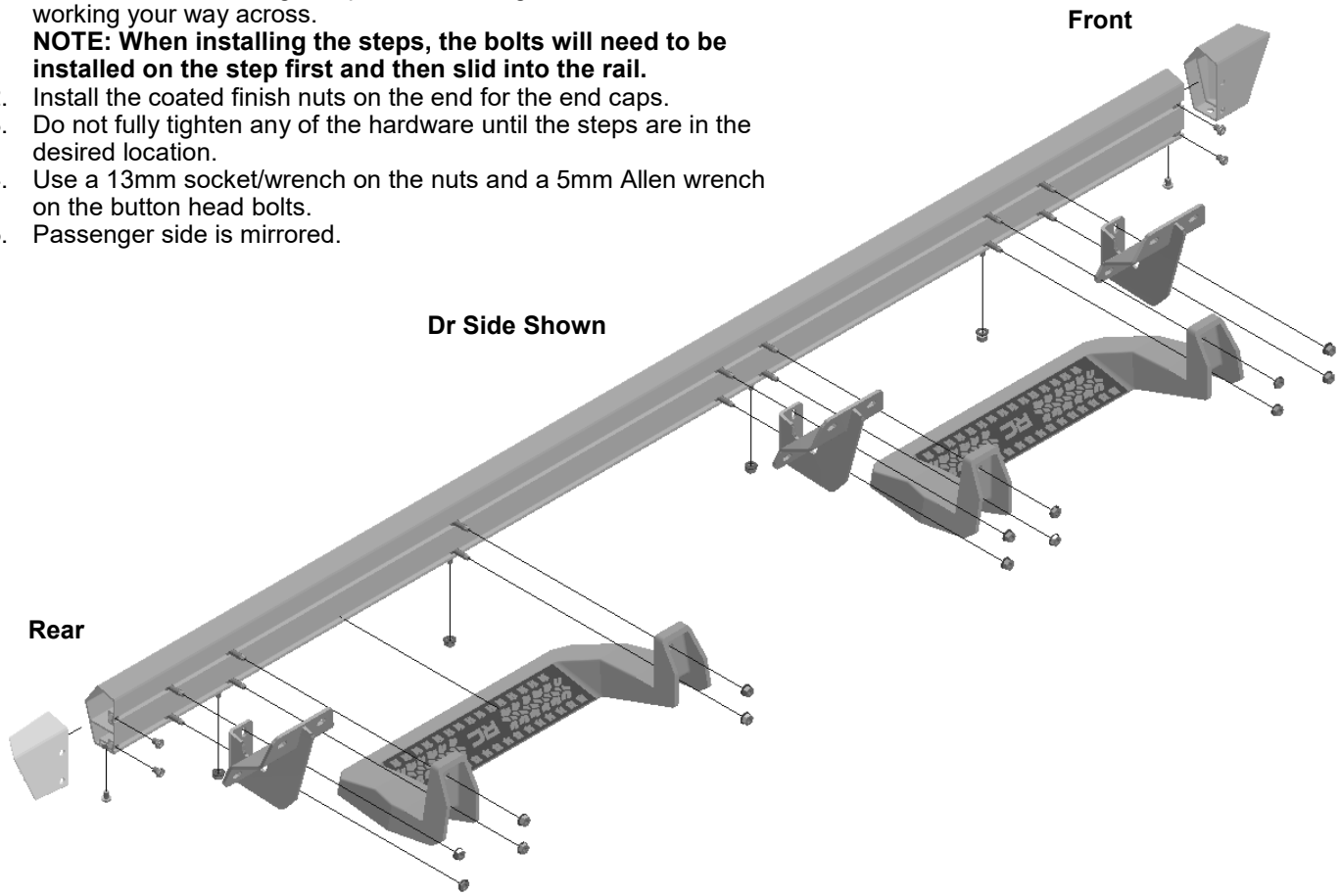

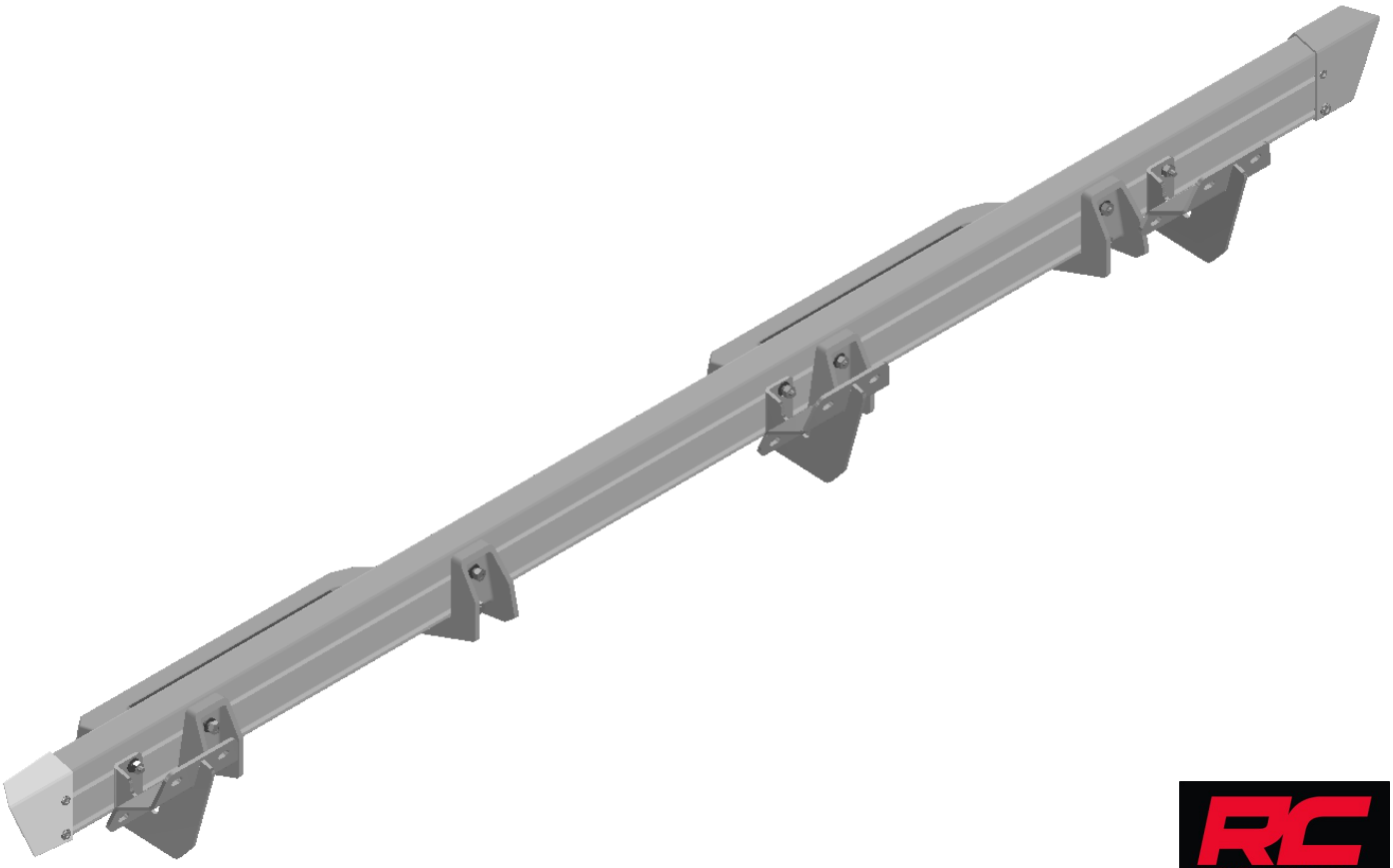

6. Attach the assembly to the studs on the body. Use supplied 8mm lock nuts if you do not have factory hardware.
7. Adjust the steps to the desired locations and tighten all the hardware.

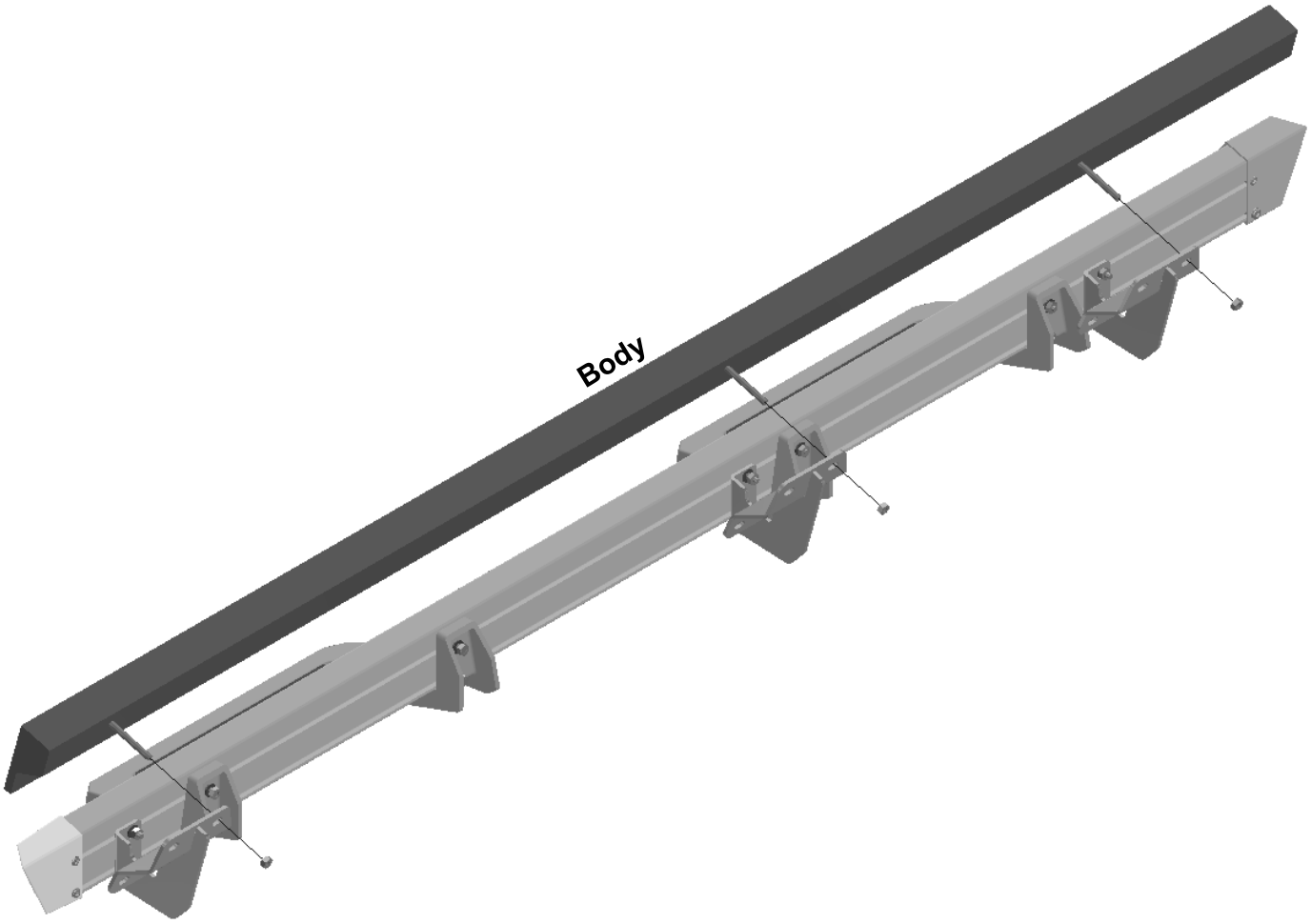

By purchasing any item sold by Rough Country, LLC, the buyer expressly warrants that he/she is in compliance with all applicable, State, and Local laws and regulations regarding the purchase, ownership, and use of the item. It shall be the buyers responsibility to comply with all Federal, State and Local laws governing the sales of any items listed, illustrated or sold. The buyer expressly agrees to indemnify and hold harmless Rough Country, LLC for all claims resulting directly or indirectly from the purchase, ownership, or use of the items.