TRAIL FORTRESS

BUILT FOR THE TRAIL. CHECKED FOR YOUR TRUCK.

Rough Country 51122 Installation Instructions

Rear Molle Mounting Panel for Ford Bronco (2021–2025)

Part number: 51122

trailfortress.com/rear-molle-mounting-panel-ford-bronco-rough-country-51122

Scan for fitment, price and install help

ROUGH COUNTRY
SUSPENSION SYSTEMS®

921511220

FORD 2021-22 BRONCO REAR MOLLE PANEL

Thank you for choosing Rough Country for all your vehicle needs.

Please read instructions before beginning installation. Check the kit hardware against the kit contents shown below. Be sure you have all needed parts and know where they go.
If questions exist, please call us @1-800-222-7023. We will be happy to answer any questions concerning this product.
Check all fasteners for proper torque. Check to ensure for adequate clearance between all components.
Periodically check all hardware for tightness.

KIT CONTENTS:
Rear MOLLE Panel x1
Mounting Bracket A x4
Mounting Bracket B x4

TOOLS NEEDED:
5mm Allen Wrench
13mm Wrench or Socket

HARDWARE INCLUDED:
8mm x 40mm Button Head Bolts x4
8mm Flat Washer - Black x4
8mm Flange Nut - Black x4

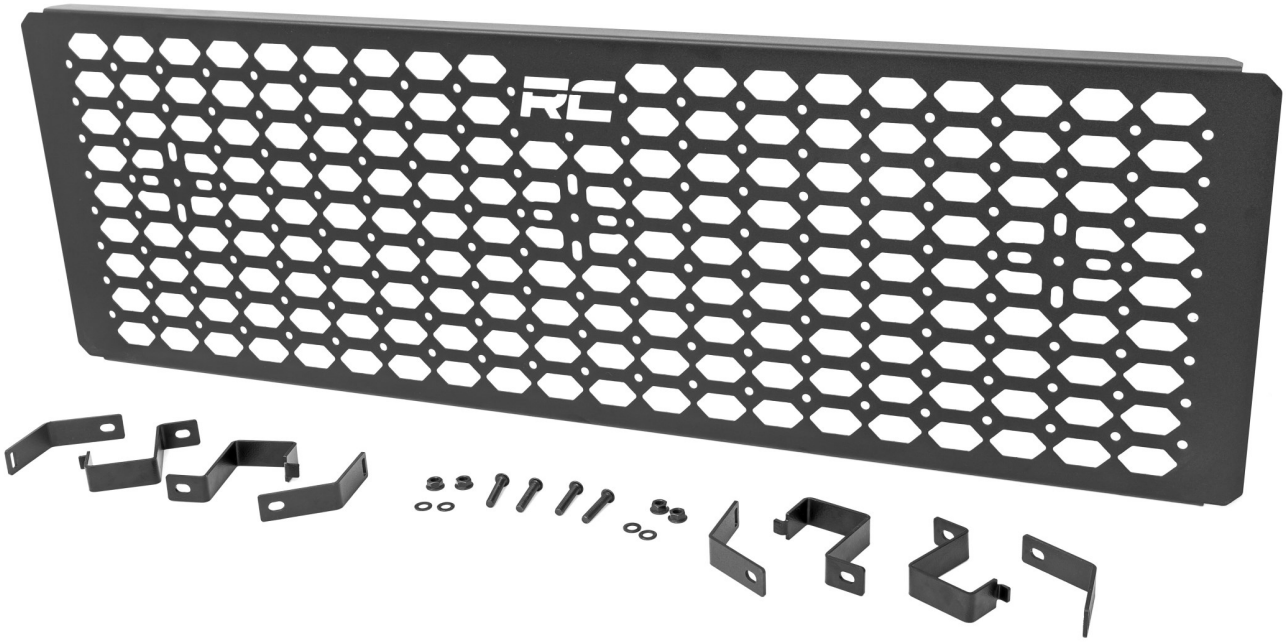

Torque Specs:

Size	Grade 5	Grade 8	Size	Class 8.8	Class 10.9
5/16”	15 ft/lbs	20ft/lbs	6MM	5ft/lbs	9ft/lbs
3/8”	30 ft/lbs	35ft/lbs	8MM	18ft/lbs	23ft/lbs
7/16”	45 ft/lbs	60ft/lbs	10MM	32ft/lbs	45ft/lbs
1/2”	65 ft/lbs	90ft/lbs	12MM	55ft/lbs	75ft/lbs
9/16”	95 ft/lbs	130ft/lbs	14MM	85ft/lbs	120ft/lbs
5/8”	135ft/lbs	175ft/lbs	16MM	130ft/lbs	165ft/lbs
3/4”	185ft/lbs	280ft/lbs	18MM	170ft/lbs	240ft/lbs

INSTALLATION INSTRUCTONS

1. Place tab of mounting bracket A into the slot of mounting bracket B. **See Photo 1.** Wrap the two brackets around the rear roll cage member. **See Photo 2.**

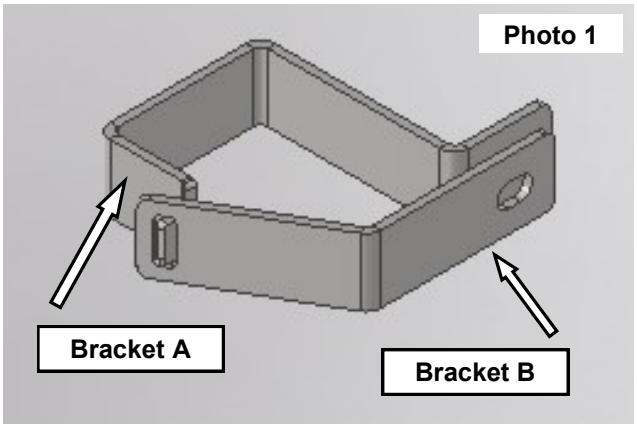

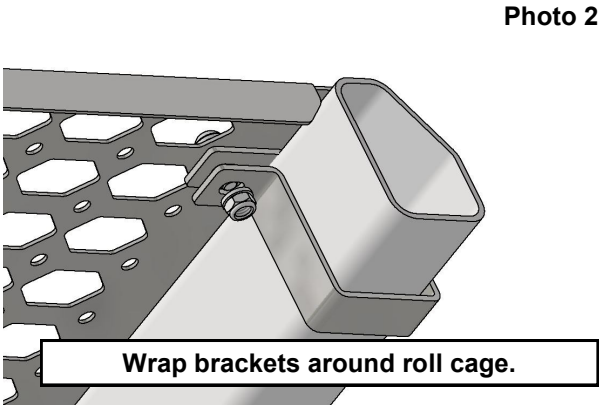

2. Place MOLLE panel over the two brackets and align with the top most hole. **See Photo 3.** Install supplied 8mm x 40mm button head bolt, 8mm flat washer, and 8mm flange nut. Loosely tighten. **See Photo 4.**
3. Repeat Step 1 and Step 2 for remaining three pairs of brackets. Adjust height of panel as desired. Tighten when finished.

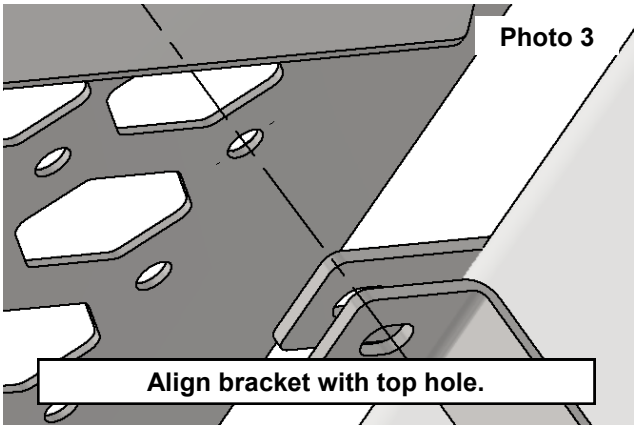

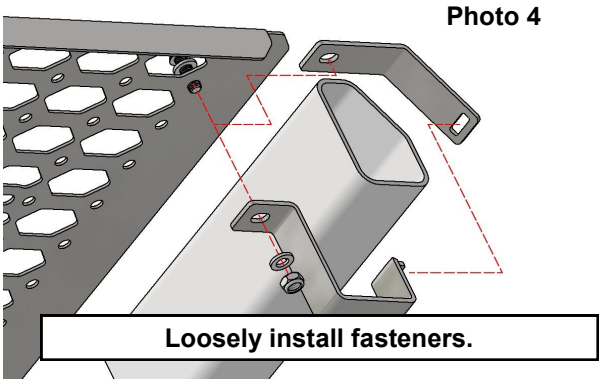

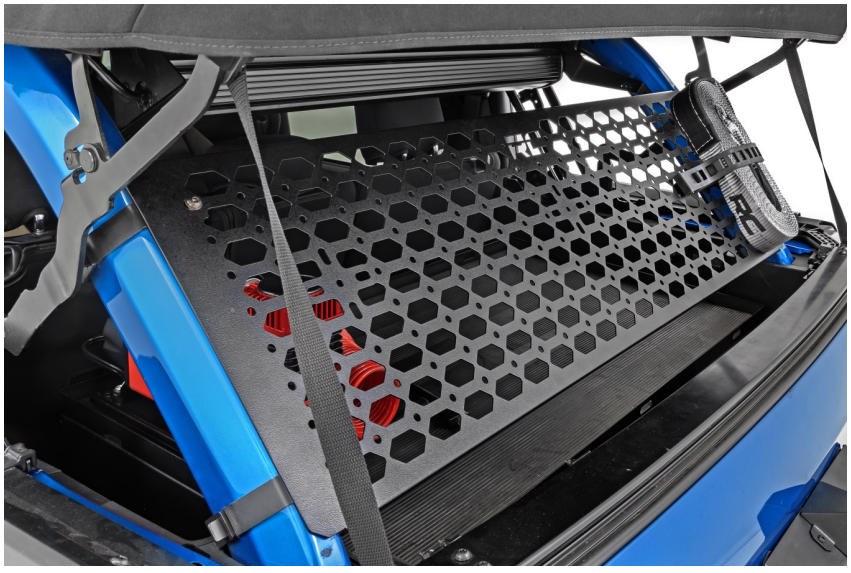

By purchasing any item sold by Rough Country, LLC, the buyer expressly warrants that he/she is in compliance with all applicable, State, and Local laws and regulations regarding the purchase, ownership, and use of the item. It shall be the buyers responsibility to comply with all Federal, State and Local laws governing the sales of any items listed, illustrated or sold. The buyer expressly agrees to indemnify and hold harmless Rough Country, LLC for all claims resulting directly or indirectly from the purchase, ownership, or use of the items.