TRAIL FORTRESS

BUILT FOR THE TRAIL. CHECKED FOR YOUR TRUCK.

Rough Country 51120500 Installation Instructions

Powered Retractable Bed Cover for 5' Bed, Colorado/Canyon (2015-2026)

Part number: 51120500

trailfortress.com/rough-country-powered-retractable-bed-cover-5-bed-51120500

Scan for fitment, price and install help

ROUGH COUNTRY

15-Up Chevrolet Colorado/GMC Canyon 5' Bed Powered Retractable Bed Cover

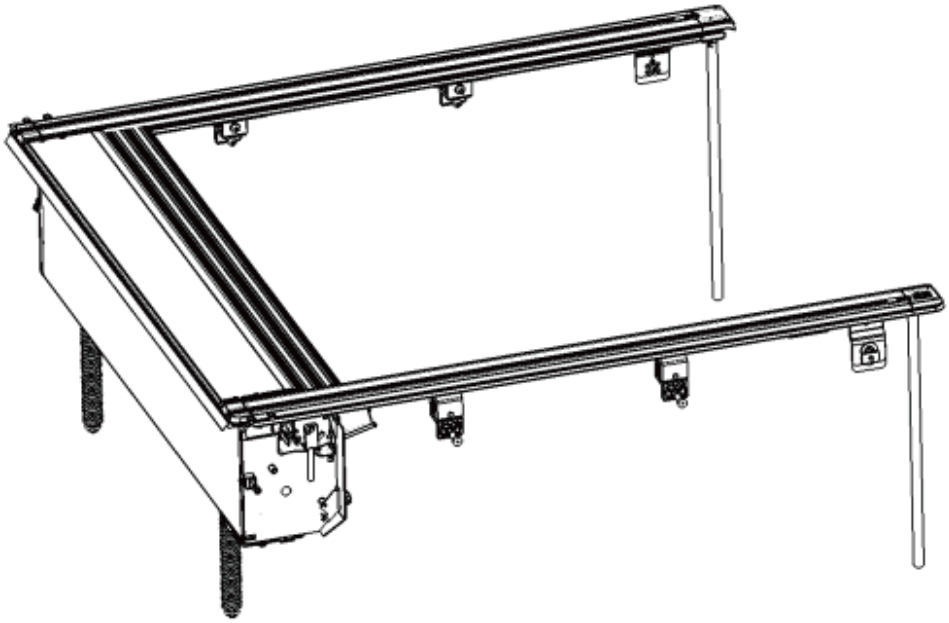

Estimated Install time: 120 minutes

BEFORE YOU START:

- Read instructions carefully before beginning installation.
- Check that all parts/hardware are present and correct as depicted below.

GENERAL NOTES:

- Keep all boxes and packaging until the installation is complete.
- Unpack all components carefully to prevent damage.
- Ensure any bare metal surfaces are protected by automotive primer and touch up paint. Remove any dust/debris from vehicle mounting surfaces prior to installation.
- This tonneau cover is compatible with spray-on bed liners, **however any composite drop-in bed liners must be removed prior to tonneau cover installation**.
- This product must be installed as outlined in these instructions. Failure to do so may result in damage to the vehicle or the product.
- Do not modify the structure of the Tonneau Cover in any way
- **Always wear eye protection when operating power tools**

trailfortress.com/rough-country-powered-retractable-bed-cover-5-bed-51120500

INSTALLATION INSTRUCTIONS

PARTS LIST:

1

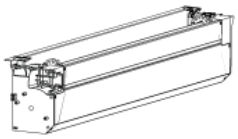

Tonneau Cover Canister Assembly x 1

2



Canister Cover Plate x 1

3



DS Side Rail x 1

4



PS Side Rail x 1

5



Calibration Crossbar x 1

6

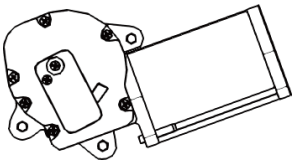

Motor x 1

7



Motor Housing x 1

8

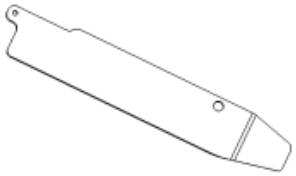

Block Off Panel x 1

9

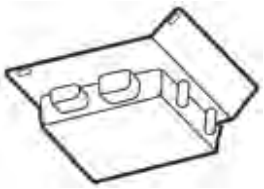

ECU with Mount Bracket x 1

trailfortress.com/rough-country-powered-retractable-bed-cover-5-bed-51120500

INSTALLATION INSTRUCTIONS

HARDWARE LIST:

10



6mm T-channel
Nut Block x 10

11

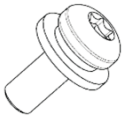

6-1.00mm x 16mm
Torx Bolt x 10

12



6-1.00mm x 20mm
Torx Bolt x 9

13

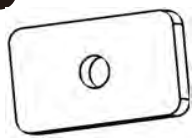

8mm Threaded
Nut Plate x 2

14



8mm Lock Washer x 2

15

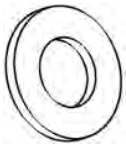

8mm x 24mm x 2mm
Flat Washer x 2

16



8-1.25mm x 25mm
Torx Bolt x 2

17

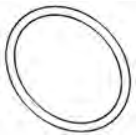

Rubber O-Ring x 2

18



Front Drain Tube
Adapter x 2

19



Front Drain Tube x 2

20



Tube Clamp x 2

21

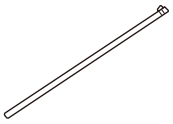

Rear Drain Tube x 2

22



Adhesion Promoter
x 1

23

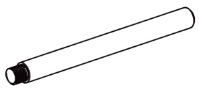

Motor Clutch Handle x 1

24

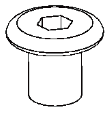

5mm x10mm Flat
Head Screw x 4

25



Plastic Cap x 4

26



Bed Rail Top Foam
Spacer x 3

27

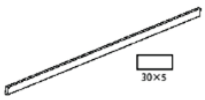

Bed Front Gap Foam
Spacer x 1

28

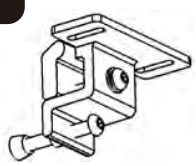

Clamp Bracket x 4

29



Rear Mount Bracket
(15-22MY) x 2

trailfortress.com/rough-country-powered-retractable-bed-cover-5-bed-51120500

INSTALLATION INSTRUCTIONS

30



Rear Mount Bracket (23-25MY) x 2

31



Plastic Ring x 4

32

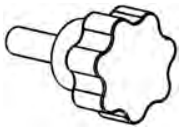

Threaded Knob x 1

33



Nylon Ties x 10

34



Fastening Buckle x 8

35



S3 Allen Wrench x 1

36



T40 Torx Wrench x 1

37



T30 Torx Wrench x 1

38



Power Cable x 1

39



ECU Main Harness Set x 1

40



PKE Key Fob Remote x 2

41

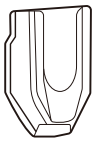

Key Fob Holder x 1

42



S6 Allen Wrench x 1

43



Hole Saw (Ø19mm) x 1

trailfortress.com/rough-country-powered-retractable-bed-cover-5-bed-51120500

INSTALLATION INSTRUCTIONS

TOOLS REQUIRED

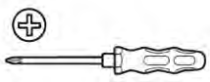

Phillips Screwdriver

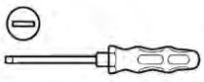

Flat Screwdriver



Scissors

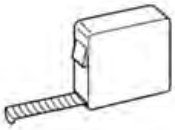

Tape Measure



Caulking Gun

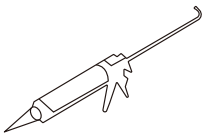

Caulking Gun

STEP 1

REMOVE FROM PACKAGING AND REVIEW CONTENTS

Carefully remove all contents from outer package, open all boxes contained within and confirm that all components are present and undamaged

STEP 2

PREP TRUCK BED FOR INSTALLATION

Drilling is required to install the front drain tubes.

Use caution when drilling through the front of the bed to not hit the cab, a drill stop may be used to help prevent this

Front Drain Tubes: (15-22MY) Measure approximately 5.25in (134mm) from the driver side of the bed, and 4.5in (115mm) up from the base of the bed. Measure approximately 11in (280mm) from the passenger side of the bed and 4.5in (115mm) from the base of the bed. Use the included 19mm hole saw to cut the drain tube holes.

trailfortress.com/rough-country-powered-retractable-bed-cover-5-bed-51120500

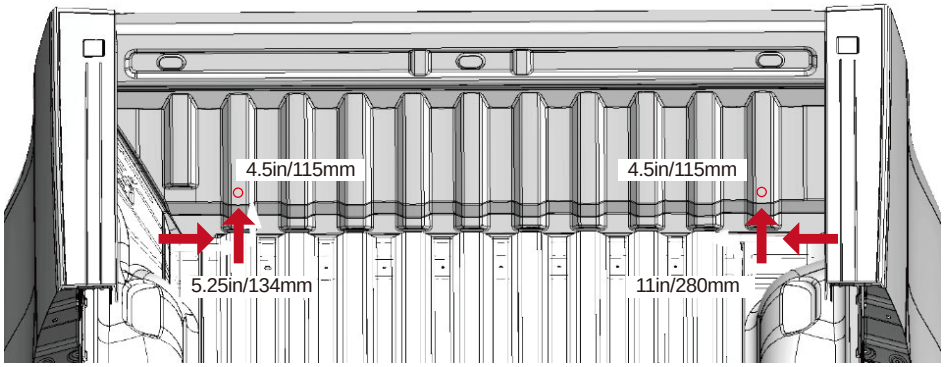

(15-22MY) Measure approximately 4.5in (115mm) from the driver side of the bed, and 4.5in (115mm) up from the base of the bed. Use the included 19mm hole saw to cut the drain tube holes.

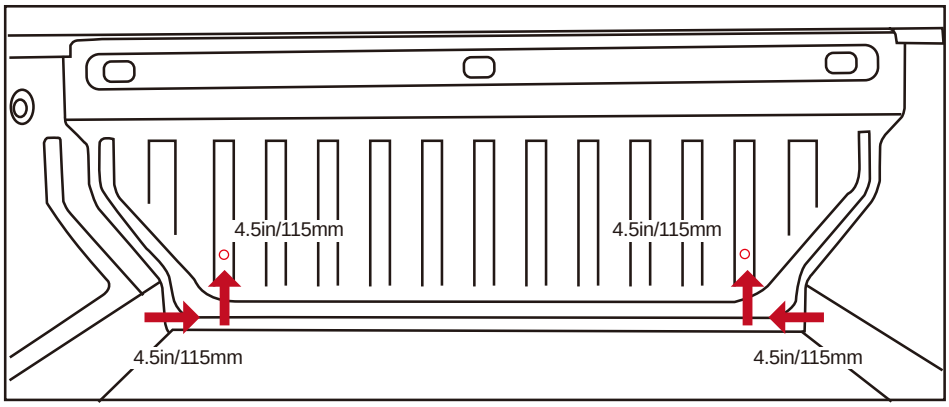

Clean the top of the plastic bed caps and top of front bed bulkhead of dirt/debris

Install the front bulkhead seal (hard foam seal) across the top of the front bulkhead
***(15-22MY only, bulkhead seal not necessary on 23-25MY)**

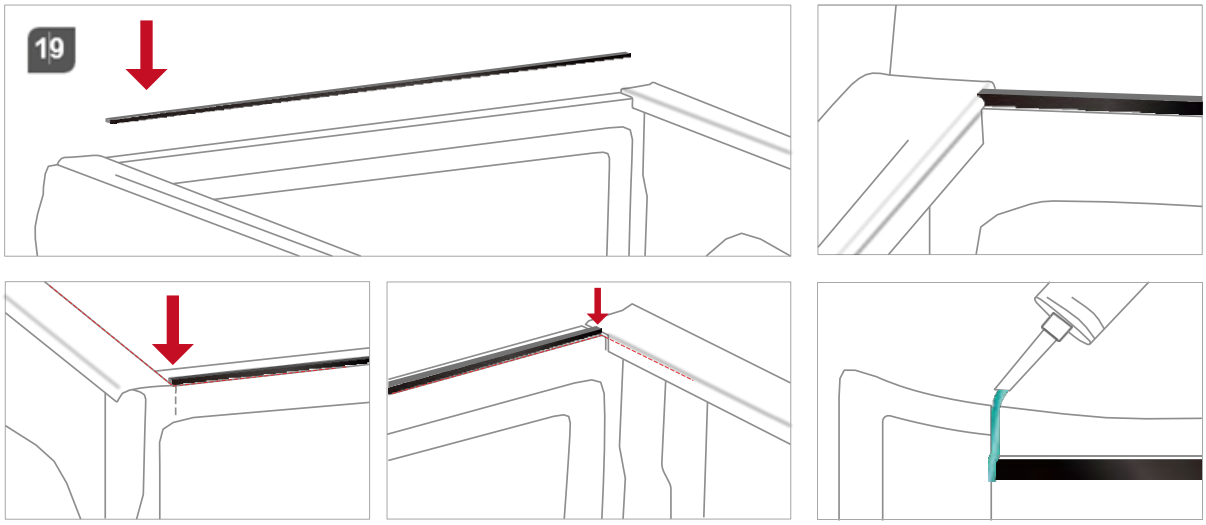

trailfortress.com/rough-country-powered-retractable-bed-cover-5-bed-51120500

Install the water-resistant seals (soft foam seals) across the top of the front bulkhead (on top of the bulkhead seal) and the plastic bed caps. The seal applied to the front bulkhead will span the whole width of the truck bed, the seals applied to the plastic bed caps should be positioned as close to the inner edge of the bed as possible. Trim off any excess.
A small amount of sealant may be used at the corners of the front bulkhead to improve water resistance

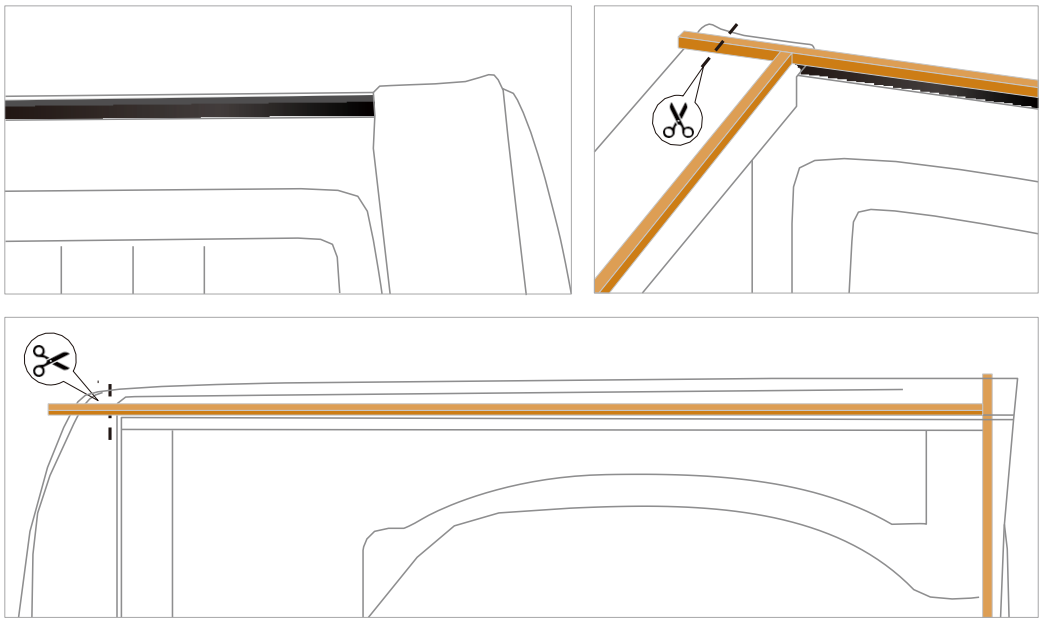

STEP 3
INSTALL MOTOR

Place the canister upright on level ground and locate the mounting location for the motor on the driver side

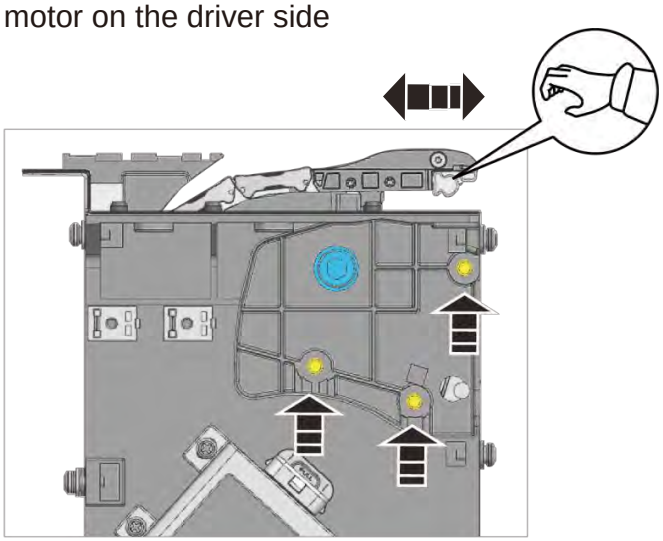

Install the motor clutch handle onto the motor assembly

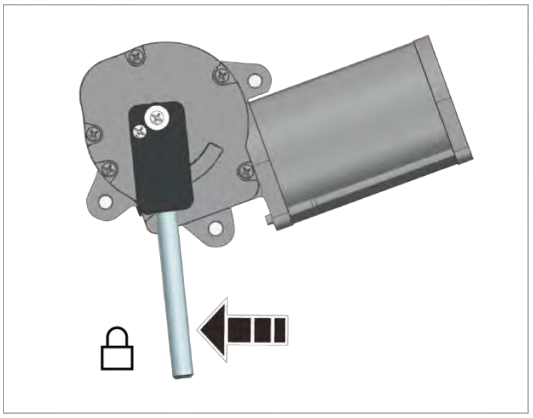

trailfortress.com/rough-country-powered-retractable-bed-cover-5-bed-51120500

Lift the clutch handle upward to disengage the motor. Rotate the motor arm (A) so that it aligns with the rotating shaft in the canister (B).

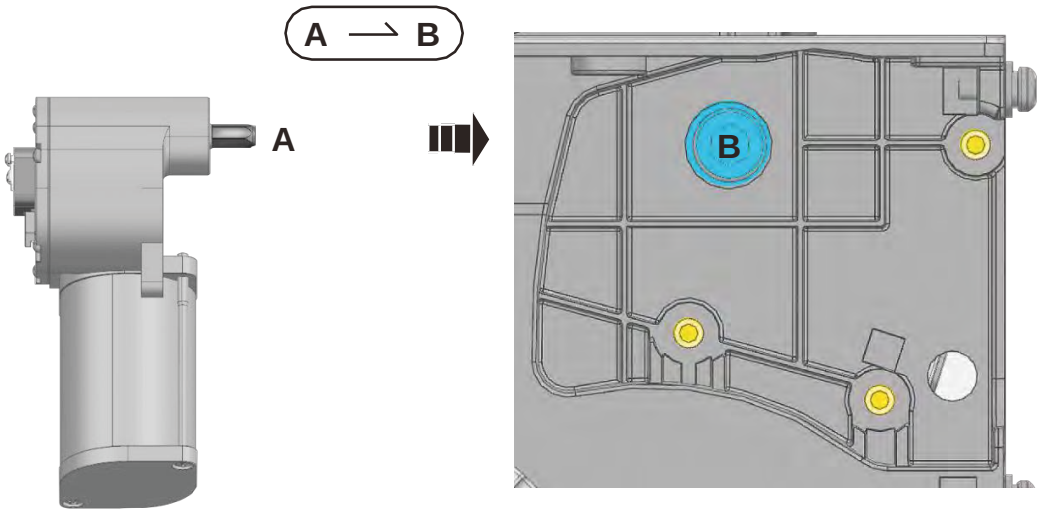

Route the motor harness and the canister light harness under the motor and use three (3) 6-1.00 x 20mm torx combo bolts to attach the motor to the canister

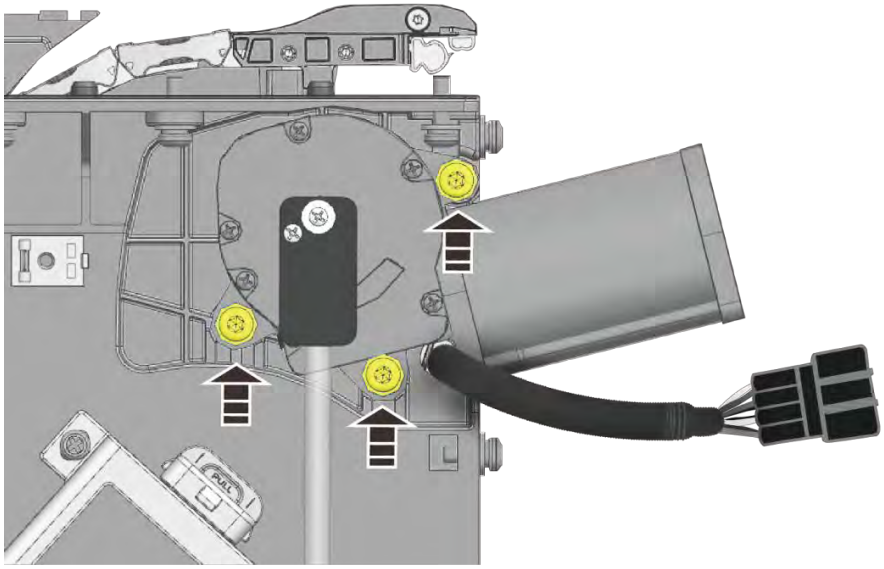

trailfortress.com/rough-country-powered-retractable-bed-cover-5-bed-51120500

Temporarily remove two (2) T30 torx bolts from the canister. Line up the mount holes on the motor cover with the holes on the canister. Reinstall and tighten the two (2) T30 torx bolts that were previously removed from the canister

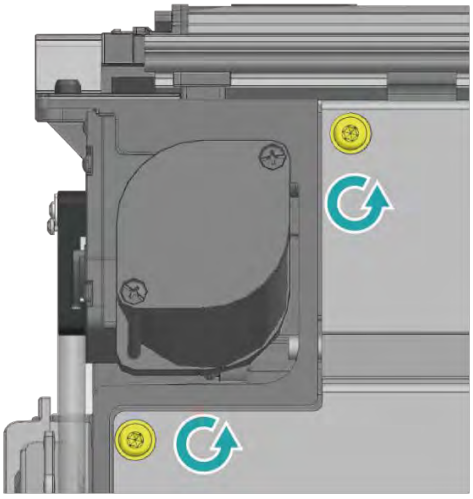

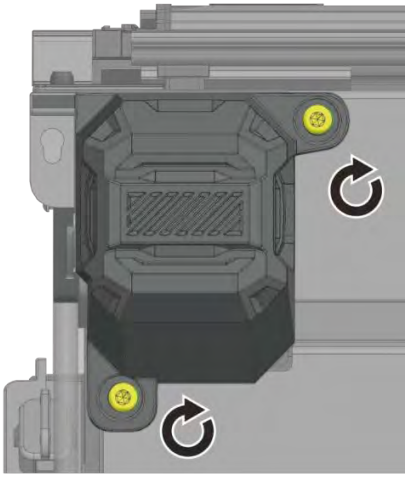

STEP 4

INSTALL ECU AND SIDE RAILS

Carefully rotate the canister so that the front (with the LED light strip) is facing upward.

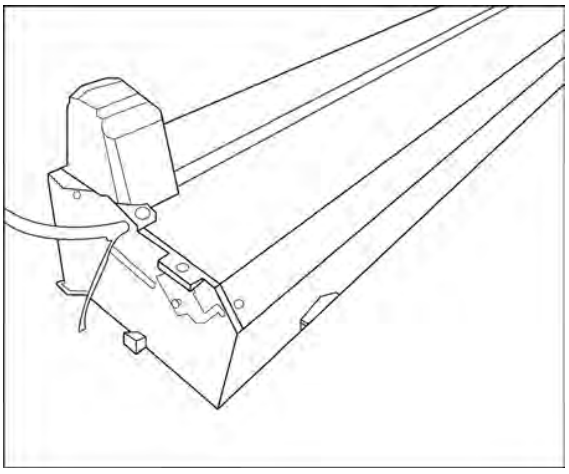

trailfortress.com/rough-country-powered-retractable-bed-cover-5-bed-51120500

Temporarily remove two (2) bolts on the driver side of the canister. Remove the protective film from the adhesive on the bottom of the ECU mount bracket assembly.

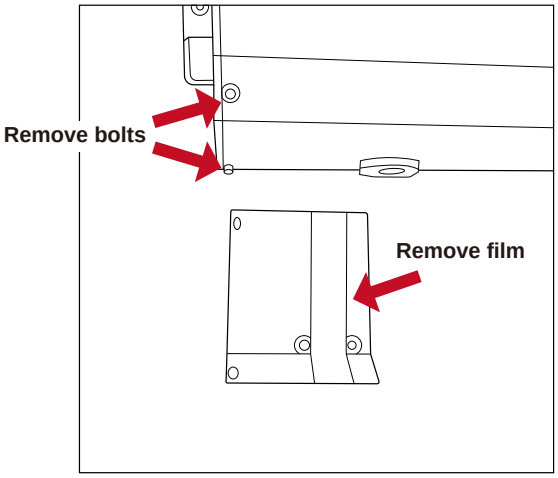

Line up the holes on the ECU mount bracket assembly with the holes on the canister and reinstall the bolts that were previously removed. Press firmly on the ECU mount bracket assembly to ensure proper adhesion between the adhesive on the ECU mount bracket assembly and the canister. Carefully rotate the canister so it is positioned upright once again

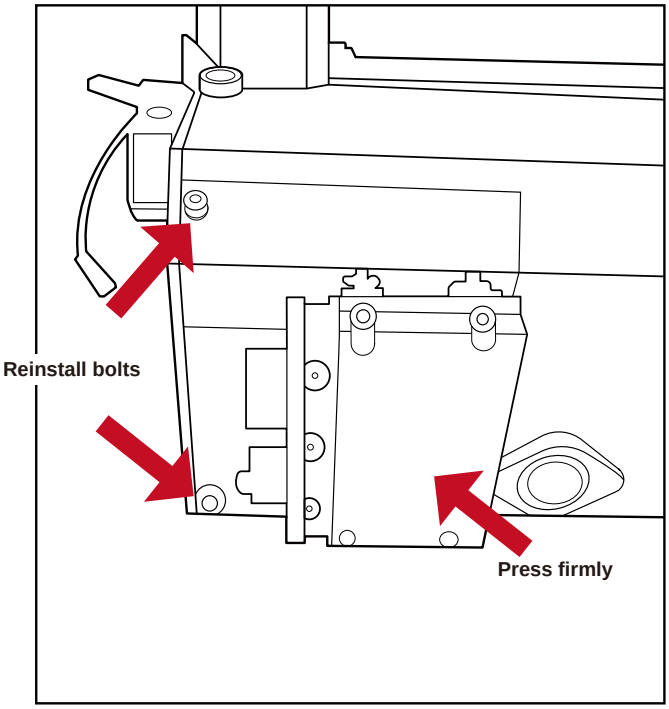

trailfortress.com/rough-country-powered-retractable-bed-cover-5-bed-51120500

Remove the protective plastic wrapping from the side rails and identify the driver and passenger side rails. The driver side rail will have the buttons to operate the tonneau cover at the end

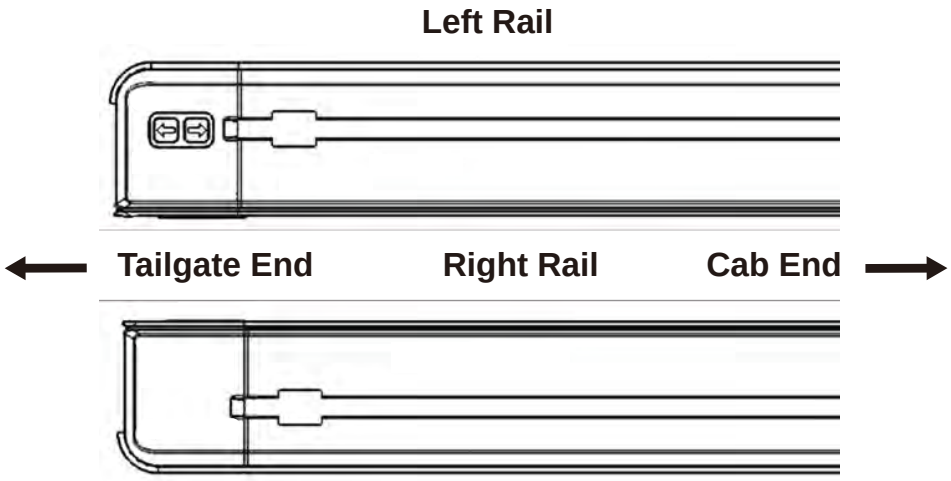

Lift the motor clutch handle to disengage the motor, and carefully pull the tonneau cover out from the canister and ensure that the stopper on the tonneau cover is in front of the limit block on the canister

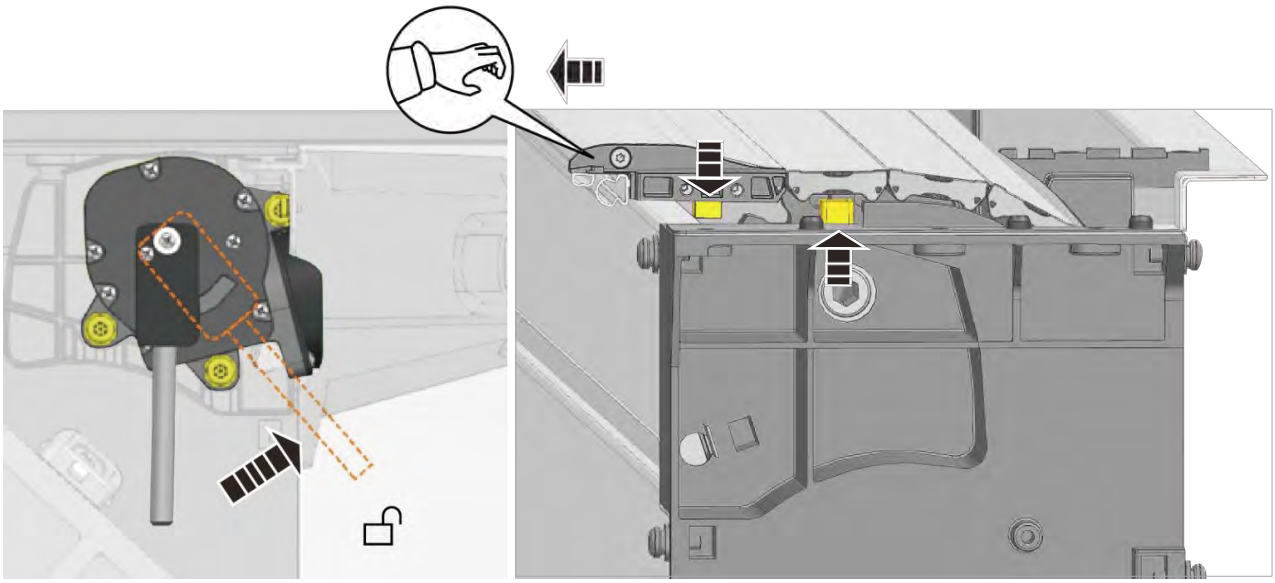

trailfortress.com/rough-country-powered-retractable-bed-cover-5-bed-51120500

Line up the side rail with the canister and carefully slide it inward, ensuring that the ends of the tonneau cover slats are properly inserted into the side rail channel. It may be necessary to lift up part of the side rail sweep seal so that it stays on top of the tonneau cover slats and does not get tucked in

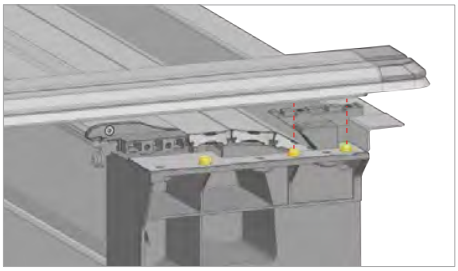
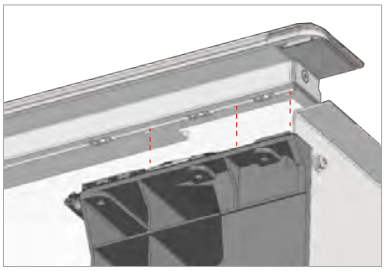
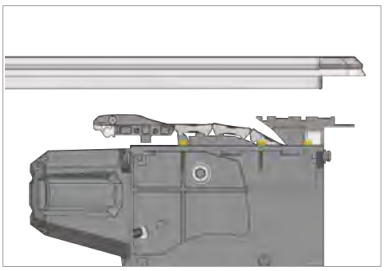

Check that the side rail is sitting flush on top of the canister, then use three (3) 6-1.00mm x 20mm T30 torx bolts to install the side rail onto the canister.

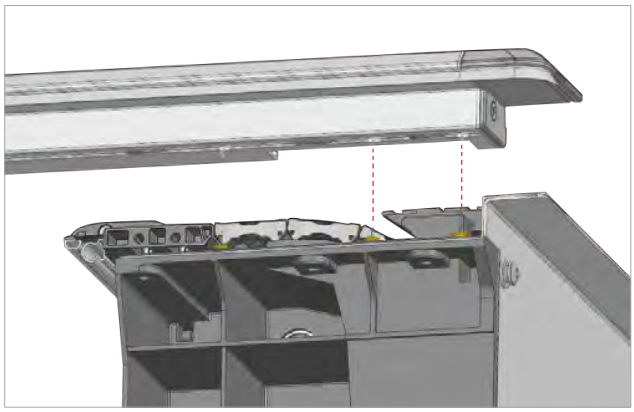


Repeat this process to install the other side rail

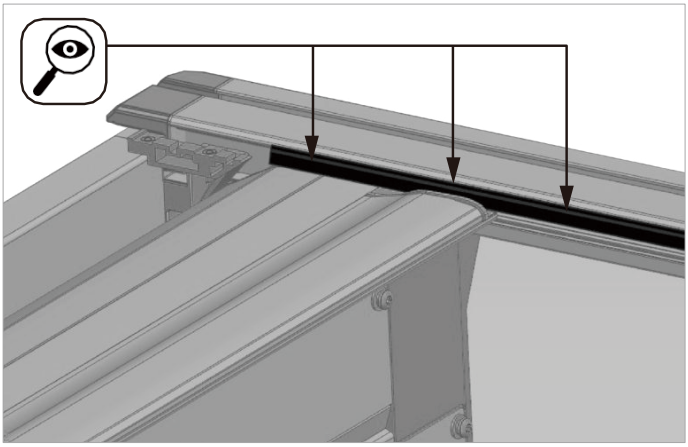

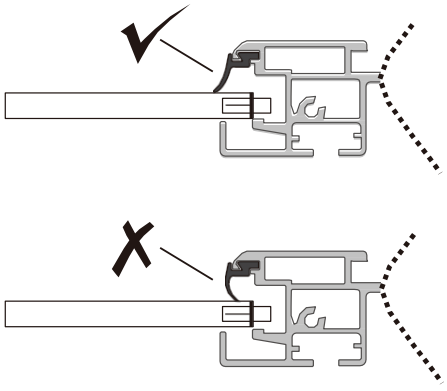

CHECK SEAL IS IN
POSITION AND NOT DAMAGED

trailfortress.com/rough-country-powered-retractable-bed-cover-5-bed-51120500

Pull the clutch handle downward to engage the motor.

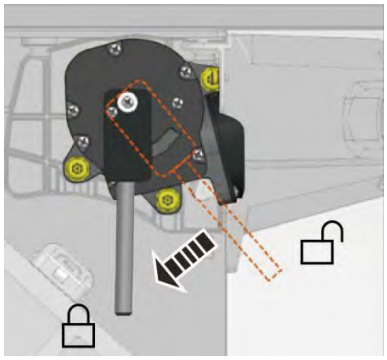

STEP 5

INSTALL CANISTER COVER PLATE

Place the canister cover plate on top of the canister and make sure the mount holes line up with the mount points on the canister. Place one (1) plastic ring into each hole on the canister cover plate, then use four (4) 5mm x 8mm flat head screws to attach the canister cover plate to the canister. Remove the covering over the adhesive strips on the ends of the weather seal and press onto the bottom of the side rails, ensuring that the groove on the weather seal is inserted into the slot on the side rail. A small amount of sealant may be used to connect the joints of the rubber trims for improved water resistance

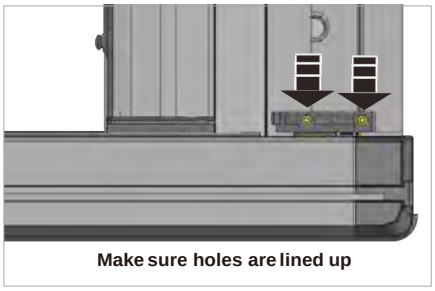

Make sure holes are lined up

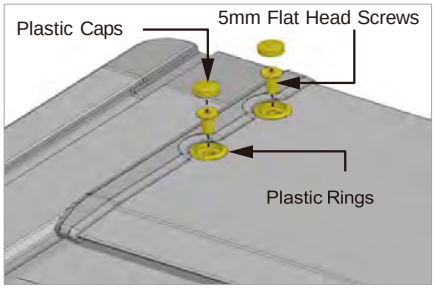



Remove covering and press onto side rail

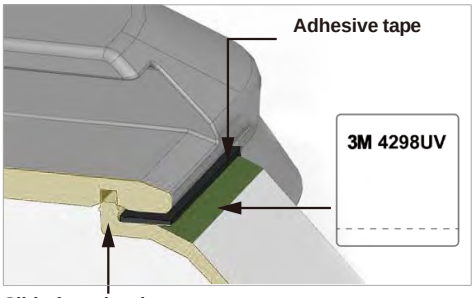

Slide into the slot

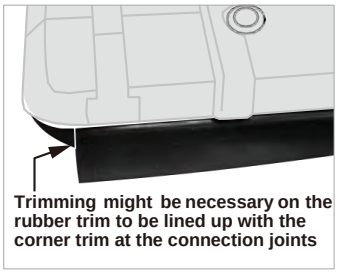

Trimming might be necessary on the rubber trim to be lined up with the corner trim at the connection joints

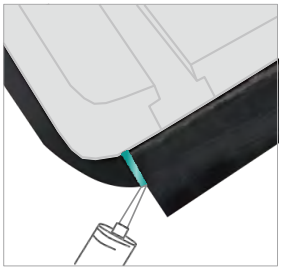

trailfortress.com/rough-country-powered-retractable-bed-cover-5-bed-51120500

STEP 6

CONNECT WIRE HARNESS ON TONNEAU COVER

All wire harness leads are labeled and have unique male/female connections. Connect the two large connectors on the ECU main harness to the bottom of the ECU. Identify the smaller leads on the ECU main harness and connect each one to the corresponding lead on the tonneau cover/side rail. Use the fastening buckles to organize the wire harness. The connector for the power harness will remain unplugged at this time

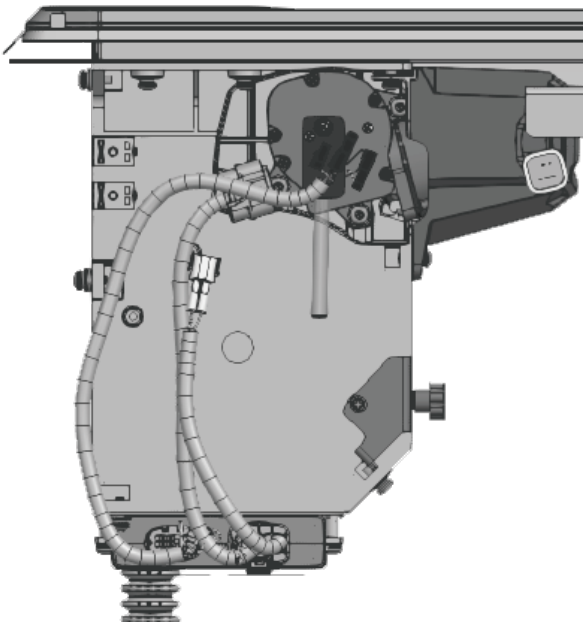

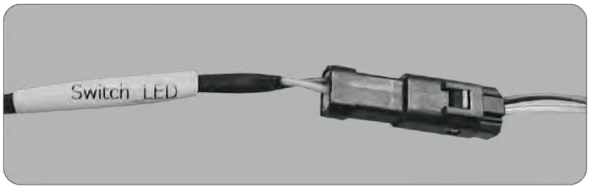

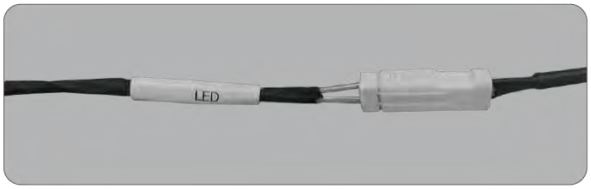

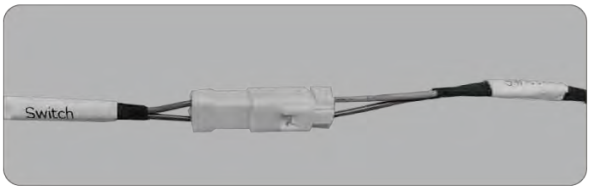



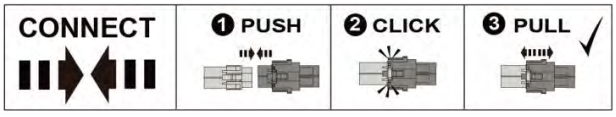

PULL THE CONNECTORS
NOT THE CABLE

trailfortress.com/rough-country-powered-retractable-bed-cover-5-bed-51120500

STEP 7

ROUTE THE POWER HARNESS

Remove the plastic plug from the top driver side of the bed.Route the power harness out of the bed through this hole, down the length of the vehicle frame, up into the engine bay, and to the vehicle battery on the passenger side. Using wire ties, secure the wire harness so it does not come into contact with moving parts or exhaust pipes. Keep the wire harness as high as possible along the frame to prevent damage while driving. Use wire ties to secure the wire harness along the frame. Leave about 1.5ft. of the power harness loose in the bed. Remove the fuse from the fuse holder on the positive power harness connector and connect it to the main power harness. Do not connect power harness to the vehicle battery at this time.

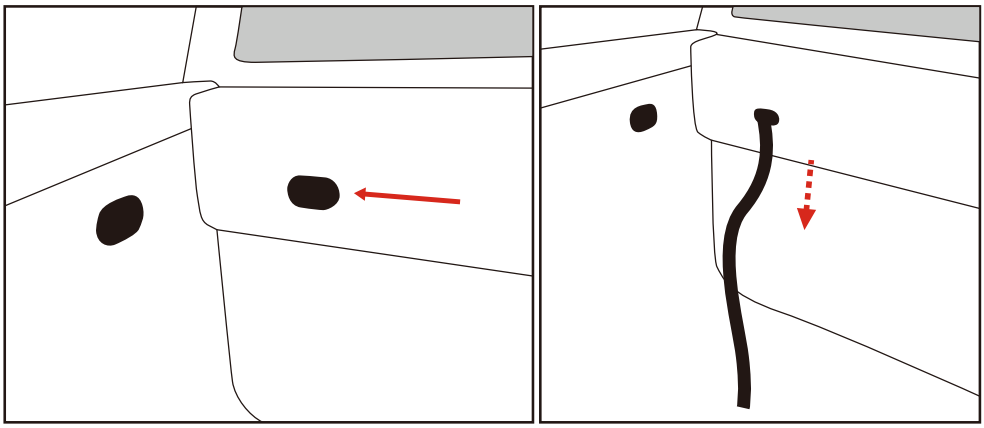

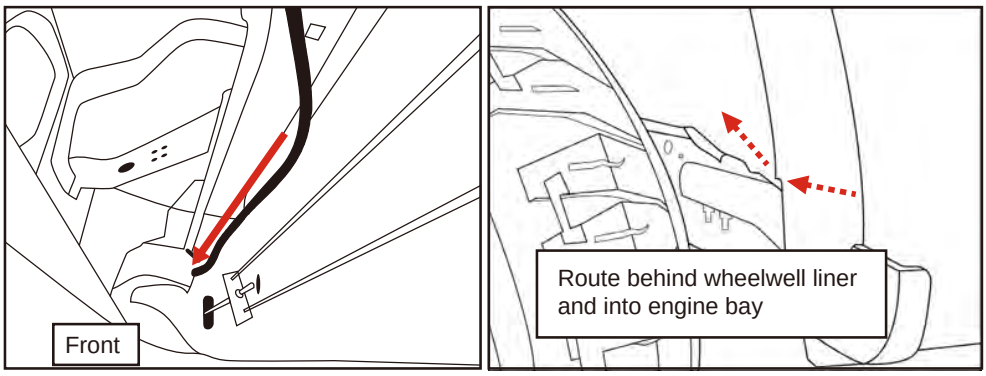

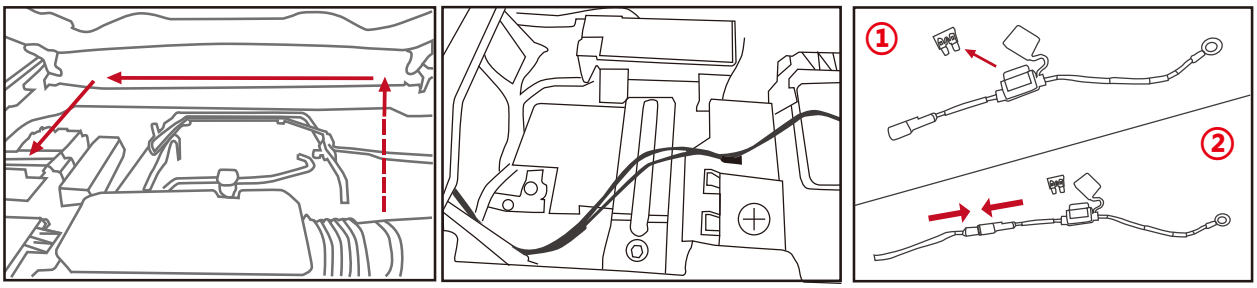

Open fuse holder cap and remove fuse

trailfortress.com/rough-country-powered-retractable-bed-cover-5-bed-51120500

STEP 8

INSTALL TONNEAU COVER ON TRUCK BED

With assistance, carefully lift the tonneau cover assembly and place it on top of the truck bed. Do not slide the tonneau cover along the bed as this will damage the foam seals. Leave the front of the tonneau cover about 1ft from the front of the bed and connect the power harness to the connector on the ECU main harness. Carefully lift the tonneau cover and position it as far forward as possible without touching the front of the bed. Leave a small gap between the canister and the front of the bed. **Be careful not to pinch the wire harness between the tonneau cover and the bed as it may get damaged.**

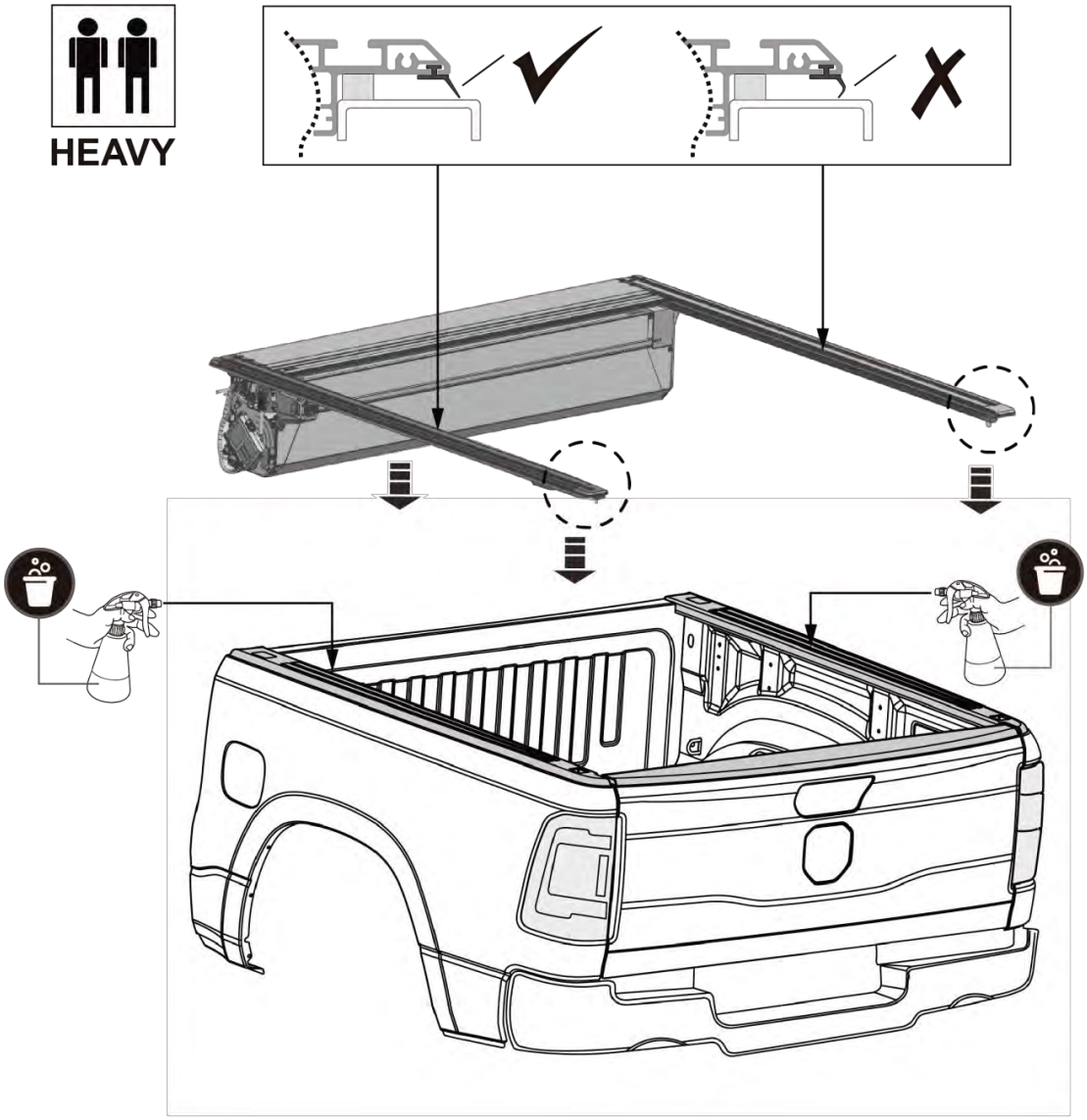

trailfortress.com/rough-country-powered-retractable-bed-cover-5-bed-51120500

STEP 9
INSTALL MOUNT BRACKETS

Front and Center Brackets: Start on the driver side. Insert four (4) 6mm t-channel blocks into the channel on the bottom of the driver side rail. Use two (2) clamp brackets and position them near the front and center of the side rail. Use two (2) 6-1.00mm x 16mm T30 torx bolts to attach each clamp bracket to the side rail. Use the S6 Allen Wrench to snug the rear clamp up to the inner surface of the bed side. Leave all mount bracket hardware loose at this time. Repeat this process for the passenger side.

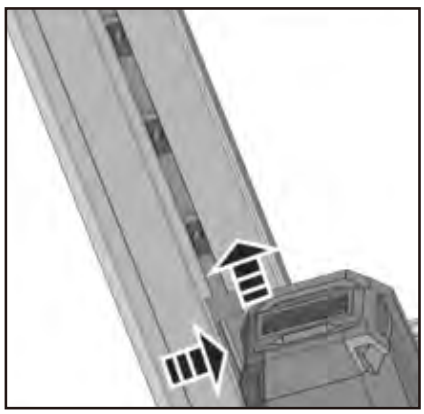

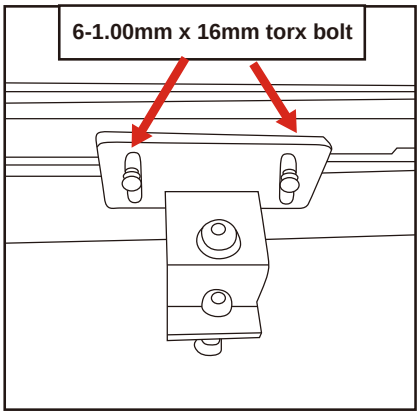

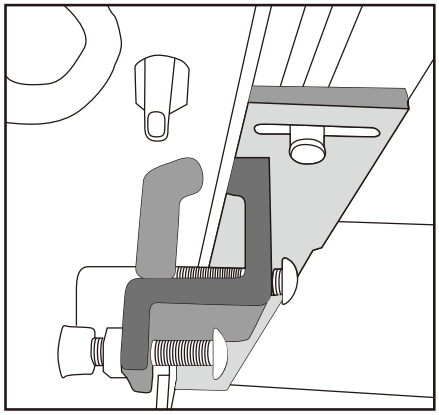

Rear Bracket: *Note- There are two different sets of rear brackets, choose the correct ones based on the vehicle model year
Start on the driver side. Insert one (1) 6mm t-channel block into the channel on the bottom of t he side rail, behind the antenna. Use one (1) 6-1.00mm x 16mm T30 torx bolt to attach the driver side rear mount bracket to the side rail. Use one (1) 8-1.25mm x 25 T40 torx bolt, one (1) 8mm x 16mm x 1.6mm flat washer, one (1) 8mm lock washer, and one (1) 8mm threaded nut plate to attach the mount bracket to the vehicle bed. Insert the 8mm threaded nut plate down through the stake pocket hole on top of the bed rail and align it with the large hole on the inside of the bed. A plastic plug may have to be removed to access this hole in the bed. Leave all mount bracket hardware loose at this time. Repeat this process for the passenger side.

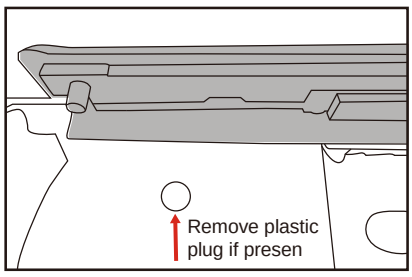

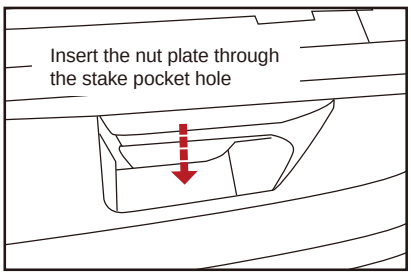

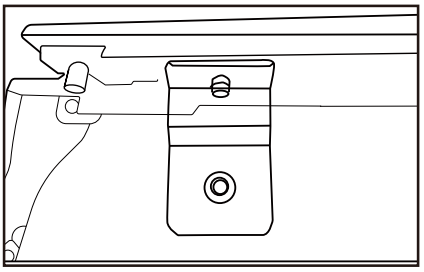

trailfortress.com/rough-country-powered-retractable-bed-cover-5-bed-51120500

STEP 10
ALIGN THE SIDE RAILS

Insert the included calibration bar into the channel on the inner side of both side rails. Slide the calibration bar along the channels and check that the distance between the side rails is the same front-to-rear. Shift the ends of the side rails until the optimum position is achieved, then carefully push down on the end of the side rails and tighten the hardware for the rear mount brackets. Use the calibration bar to double check the gap between the side rails and measure the distance between the outside of each side rail and the outer edge of the bed to ensure they are positioned centrally. This process may need to be repeated a few times until all measurements are optimal. After this has been completed, proceed to tighten the hardware for the center and front brackets, carefully pushing down on the side rails above each mount bracket before tightening the hardware. Turn the stand off bolt on the mount bracket until it is firmly pressing against the side of the bed, then tighten the jam nut against the mount bracket to lock it in place. Do not press the stand off bolt too hard against the side of the bed. As a final check to make sure the tonneau cover will operate smoothly, it can be manually moved through its full range of motion. Pull the motor clutch lever up to disengage the motor, then carefully pull on the tonneau cover. If it moves easily with no binding/rough spots, proceed with the rest of the installation. If it is difficult to operate or has rough spots, the side rails will need further adjustment until the tonneau cover operates smoothly

A=A B=B

Check that side rails are even

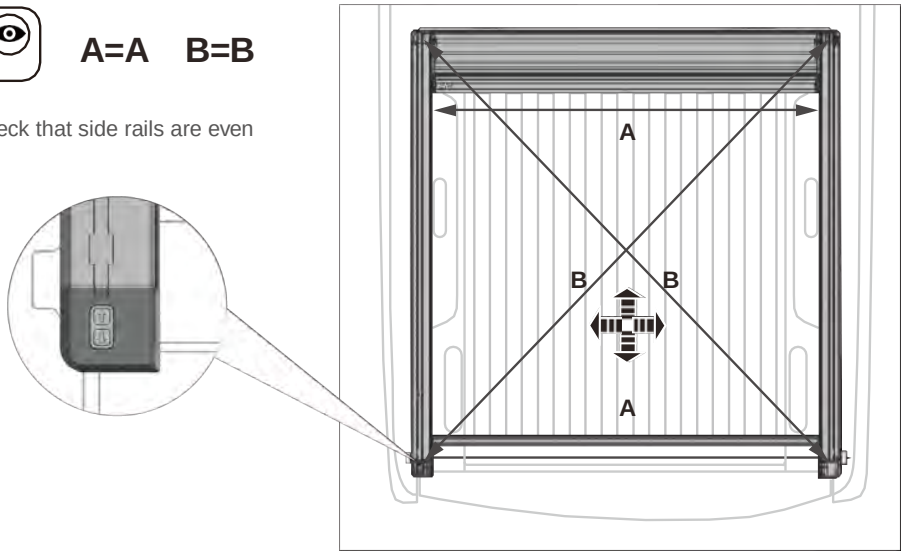

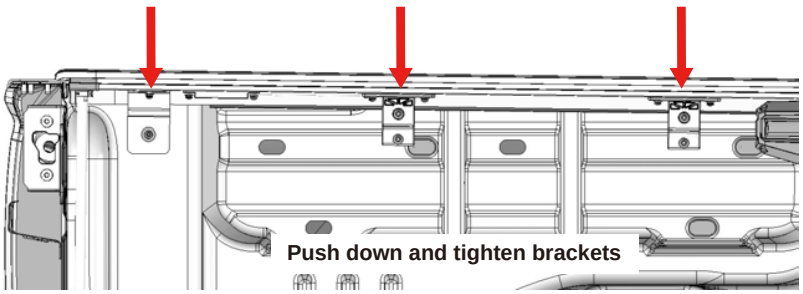

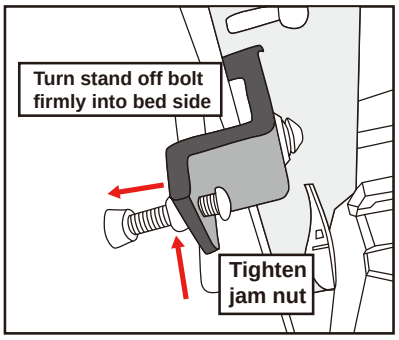

trailfortress.com/rough-country-powered-retractable-bed-cover-5-bed-51120500

STEP 11
INSTALL DRAIN TUBES

Front: install the front drain tube adapters onto the front drain tubes and tighten using the supplied tube clamps. Press the rubber ring into the groove in the canister outlet on the bottom of the canister, then screw the drain tube adapter into the canister outlet. **Do not over tighten as this may damage the plastic fittings.** Route the end of the front drain tube through the hole that was cut into the base of the bed from **Step 2.**

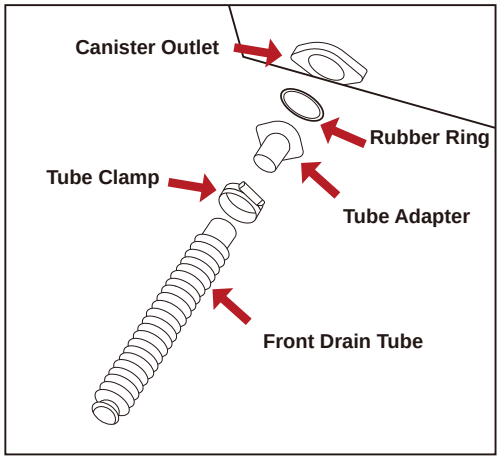

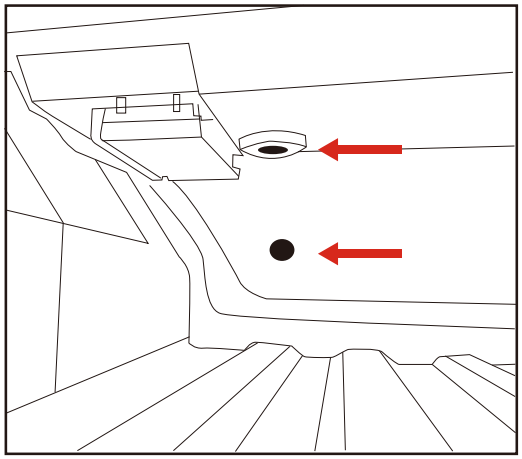

Rear: Use the included 19mm hole saw to drill a hole into each side of the bed near the tailgate approximately 14in (355mm) from the base of the bed. The location of the hole will vary slightly depending on vehicle model year. Tighten the tube clamp until the drain tube is snug on the drain outlet, **do not over tighten as this may cause damage to the drain outlet.**

***Temporary removal of the taillight assembly is necessary on 23-25MY to route the drain tube through the inner bed structure**

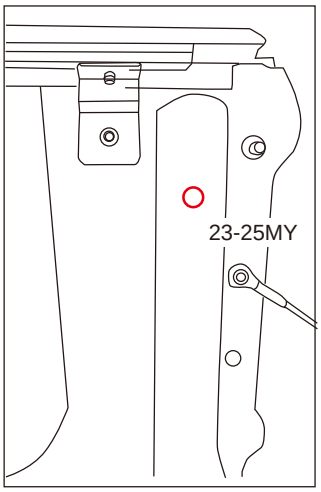

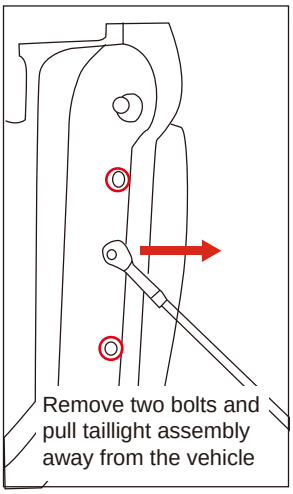

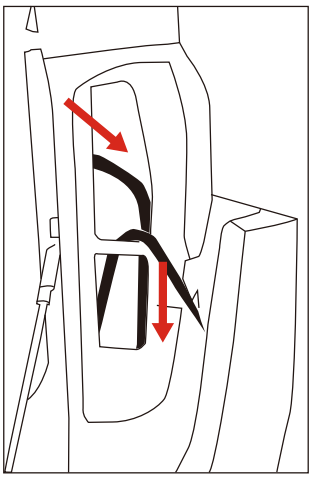

trailfortress.com/rough-country-powered-retractable-bed-cover-5-bed-51120500

STEP 12
FINISH INSTALLATION

Double check that all bracket mount hardware is tight.

Ensure that the tonneau cover motor is engaged. If it is still in manual operation mode, push the motor clutch lever down, then pull on the end of the tonneau cover until the motor clicks, signifying that it is fully engaged

Install the block off panel on the driver side of the canister. Insert the nub on the top of the block off panel into the slot on the motor cover and pull down to hold it in place. Thread the knob into the bottom hole to lock the block off panel in place

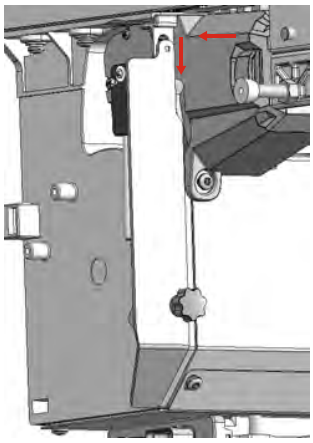

Under the hood, locate the positive and negative terminals on the vehicle battery. Carefully install the positive and negative ends of the tonneau cover power harness onto the corresponding terminals on the vehicle battery. Once the tonneau cover power harness is securely attached to the vehicle battery, place the fuse back into the fuse holder and push the cap down until it is locked in place. Secure the wires in the engine bay so they will not get damaged by moving/hot components. Reinstall the plastic cover over the battery

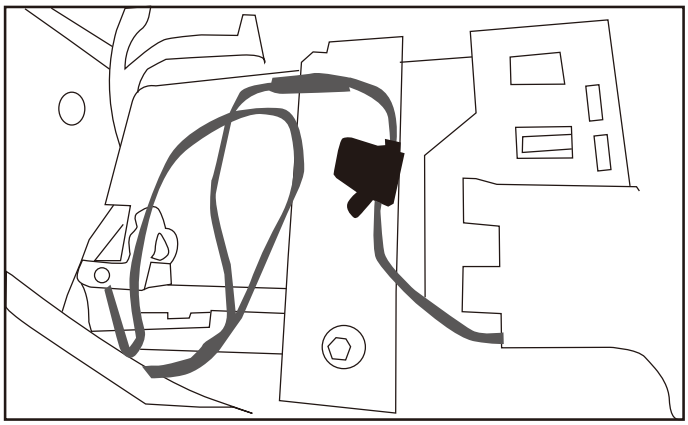

trailfortress.com/rough-country-powered-retractable-bed-cover-5-bed-51120500

OPERATION OF THE TONNEAU COVER

Remote Key Fob

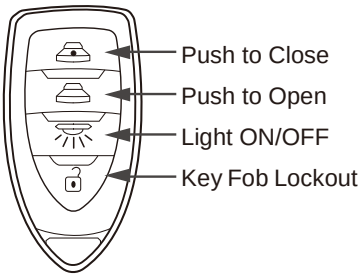

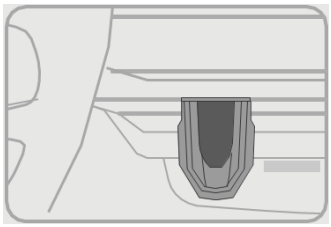

Key Fob Holder for convenient access

Side Rail Mounted Buttons

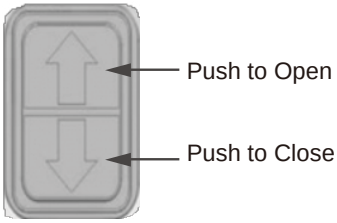

The operating range of the remote key fob is 4.5ft from the antenna located near the end of the driver side tonneau cover side rail

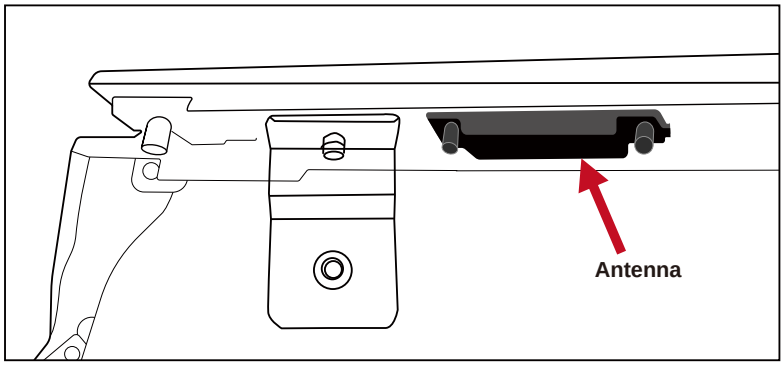

The key fob must be in range of the antenna for the side rail mounted push buttons to operate the tonneau cover

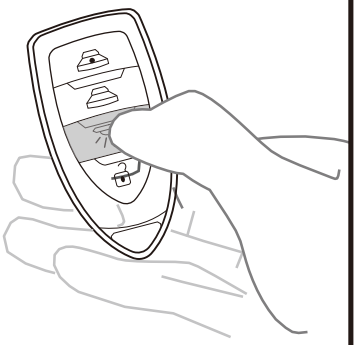

Prior to the first use of the tonneau cover, the self-calibration process must be performed:

- **Press the Key Fob Lockout button to unlock the key fob, then press and hold the Light On/Off button for 3 seconds to activate the self-calibration function.**
  - o When it starts the LED light will flash 3 times to confirm it has entered the self-calibration process. **Once the self-calibration has started, do not press any other buttons or interrupt the tonneau cover until the process has completed.**
  - o The tonneau cover will open all the way to learn the fully open position
  - o After 2 seconds, the tonneau cover will automatically close all the way to learn the fully closed position
  - o When the self-calibration is complete, the LED light will flash 3 times to confirm that the self-calibration process has been successfully completed

The self-calibration function should be used under the following conditions:

- **The first time the tonneau cover is installed and connected to power**
- **Any time after the tonneau cover has been put into manual operation mode**
- **Any time it appears the tonneau cover is not fully opening or closing**

trailfortress.com/rough-country-powered-retractable-bed-cover-5-bed-51120500

FUNCTIONS:

- **Tonneau Cover Key Fob Lockout- when the key fob is locked, the buttons on the key fob will not operate the tonneau cover until it is unlocked. The push buttons on the driver side tonneau cover side rail will still work as long as the key fob is within range**
  - Press key fob lock button- key fob use will be locked/unlocked
  - The key fob will automatically enter lockout mode if it is out of range of the antenna for more than 5 minutes
  - The first time the tonneau cover is connected to power or if it is disconnected from power, the key fob will enter its default “locked” status
  - The ECU will emit a sound to signify the status of the key fob each time the lock/unlock button is pressed
    - 1 beep- key fob is unlocked
    - 2 beeps- key fob is locked
- **To open the tonneau cover- with the key fob in range, either press the open button on the key fob (must be unlocked) or press the open button on the driver side rail**
- **To close the tonneau cover- with the key fob in range, either press the close button on the key fob (must be unlocked) or press the close button on the driver side rail**
- **LED Light:**
  - Auto Mode- when the tonneau cover opens, the light will automatically turn on and will stay on for 5 minutes. The light will automatically turn off once the tonneau cover is fully closed
  - Manual Mode- press the light button on the key fob to turn the light on/off. If the key fob is in its “lockout” mode, it will only turn the LED light off if it is already on
- **Intermittent stopping- pressing the open/close button at any time the tonneau cover is operating will immediately stop it at its current position. Tonneau cover movement will resume by pressing either button (open or close) and will move in the direction corresponding to the button pressed (open or close) independent of the initial direction of travel prior to stopping**
- **Anti-pinch Protection- if the tonneau cover detects an obstruction while it is operating, it will stop and back off about 4 inches. It will resume operating by pressing either the open or close button**
- **Switching to manual/electric modes- the tonneau cover can be switched between manual and electric operating modes by rotating the motor clutch handle up or down, as seen below:**

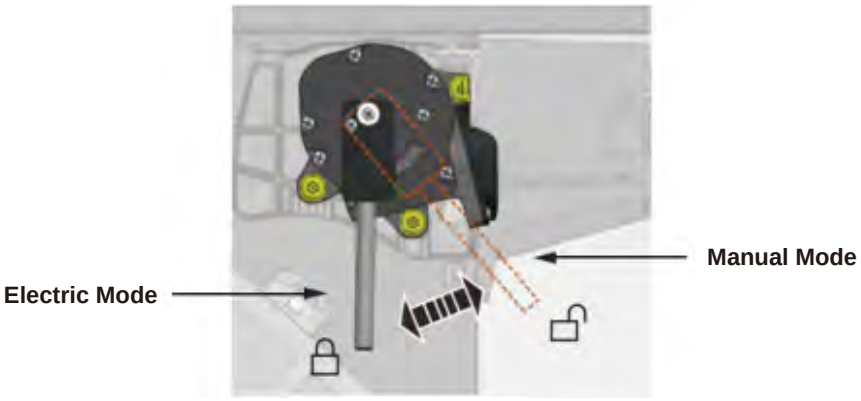

trailfortress.com/rough-country-powered-retractable-bed-cover-5-bed-51120500

When switching from manual mode to electric mode, the self-calibration process (described previously) must be performed prior to normal operation of the tonneau cover

- **System Status Indication (for repairing and troubleshooting ONLY): This function is used for troubleshooting when there's something wrong with the system and will indicate the status of the system through the flashing of the LED Light. There are two different signals of the LED Light, long flash and short flash, the error can be determined through the coding below:**
  - Self-Calibration: start with long flash 2 times, and short flash 3 times; end with long flash 2 times, and short flash 3 times
  - Motor Position Sensor Error: long flash 3 times, and short flash 1 time
  - High Voltage: long flash 4 times, and short flash 2 times
  - Low Voltage: long flash 4 times, and short flash 3 times

FINAL NOTES

- **Open and close the tonneau cover to ensure that it is operating without rubbing or binding**
- **Open and close the tailgate to check for proper movement**
- **On some models, a better fit with the tailgate may be obtained if the rear of the side rails are adjusted slightly up or down**
- **Recheck that all mounting hardware is tight.**
- **Check that the side rails are spaced evenly on the bed, and adjust accordingly**

MAINTENANCE AND CARE

- **Periodically clean the canister of dirt or debris that may have been collected inside**
- **Periodically check front and rear drain tubes and clean as needed**
- **A non-graphite dry lubricant may be sprayed onto the circular track inside the canister to maintain smooth operation of the tonneau cover**
- **Remove any snow or large debris from on top of the tonneau cover before opening**
- **Clean with mild soap and water only, do not use strong chemicals or cleaners. Do not wax the tonneau cover**
- **Periodically check that the tonneau cover is securely attached to the truck bed and that the mount brackets have not come loose. Frequent usage of the tonneau cover or vibrations from driving on rough road may cause the tonneau cover to require adjustment**
- **Inspect the remote key fob and replace the battery as needed. The LED light on the key fob will change from green to red to indicate low voltage from the battery and that it should be replaced soon**

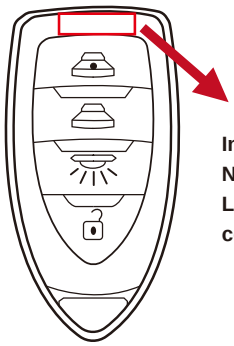

Indicator LED
Normal Use: Green light when key fob is activated.
Low Battery: Red light to remind changing battery cell of the key fob within 3 months

trailfortress.com/rough-country-powered-retractable-bed-cover-5-bed-51120500

WARNING AND SAFETY INFORMATION

- **Do not use the truck bed as a passenger compartment. In case of entrapment: Disengage the motor by removing the cover panel and lift the clutch release handle upward (front driver side of bed). Pull on the tonneau cover to retract.**
- **Do not store or transport volatile materials such as solvents, chemicals, or liquids as fumes may accumulate inside the bed. Do not allow solvents, chemicals, or oils to come into contact with the tonneau cover. If this happens clean the tonneau cover immediately with a mild detergent and water solution.**
- **Do not stand/sit or rest heavy objects on the tonneau cover.**
- **Do not fill of store volatile liquid containers such as fuel cans while under the tonneau cover.**
- **Do not drive the vehicle with the motor clutch disengaged- free moving tonneau cover may move causing injury or damage to property while driving**
- **The tonneau cover is designed to be water and dust resistant in the majority of situations, in certain extreme environments a certain level of ingress is to be expected. Items that are of high value and are susceptible to water damage should be packaged accordingly. Condensation on the underside of the tonneau cover should be expected under certain conditions (cool days/nights).**
- **Do not subject the tonneau cover to excessive open/close forces. Excessive force may damage internal components, replacement of which may not be covered in your warranty**
- **While the tonneau cover has a built in safety feature to prevent damage and injury, you must keep obstructions clear of cover during opening/closing**
- **To ensure your tonneau cover continues to operate in a trouble free manner we recommend recalibrating the cover every 6 months. This interval may be reduced if you notice any irregularities when opening or closing the cover**

By purchasing any item sold by Rough Country, LLC, the buyer expressly warrants that he/she is in compliance with all applicable, State, and Local laws and regulations regarding the purchase, ownership, and use of the item. It shall be the buyers responsibility to comply with all Federal, State and Local laws governing the sales of any items listed, illustrated or sold. The buyer expressly agrees to indemnify and hold harmless Rough Country, LLC for all claims resulting directly or indirectly from the purchase, ownership, or use of the items.

trailfortress.com/rough-country-powered-retractable-bed-cover-5-bed-51120500