Rough Country 5059 Installation Instructions

Front Shackle Reversal Kit for Jeep CJ5/CJ7/Scrambler 4WD

Part number: 5059

trailfortress.com/rough-country-front-shackle-reversal-kit-5059

Scan for fitment, price and install help



JEEP 1976-86 CJ Shackle Reversal Kit

Thank you for choosing Rough Country for all your suspension needs.

Rough Country recommends a certified technician install this system. In addition to these instructions, professional knowledge of disassemble/reassembly procedures as well as post installation checks must be known. Attempts to install this system without this knowledge and expertise may jeopardize the integrity and/or operating safety of the vehicle.

Please read instructions before beginning installation. Check the kit hardware against the parts list on this page. Be sure you have all needed parts and know where they go. Also please review tools needed list and make sure you have needed tools.

PRODUCT USE INFORMATION

⚠WARNING As a general rule, the taller a vehicle is, the easier it will roll. Seat belts and shoulder harnesses should be worn at all times. Avoid situations where a side rollover may occur.

Generally, braking performance and capability are decreased when larger/heavier tires and wheels are used. Take this into consideration while driving. Do not add, alter, or fabricate any factory or after-market parts to increase vehicle height over the intended height of the Rough Country product purchased. Mixing component brands is not recommended.

Rough Country makes no claims regarding lifting devices and excludes any and all implied claims. We will not be responsible for any product that is altered.

⚠NOTICE If equipped the electric power steering must be unplugged before any of the steering components are removed. Failure to do so may cause damage to the electric power steering.

If you have any questions concerning the design, function, and correct use of our products please contact us at 800-222-7023.

⚠NOTICE NOTICE TO DEALER AND VEHICLE OWNER

Any vehicle equipped with any Rough Country product should have a “Warning to Driver” decal installed on the inside of the windshield or on the vehicle’s dash. The decal should act as a constant reminder for whoever is operating the vehicle of its unique handling characteristics.

INSTALLING DEALER - it is your responsibility to install the warning decal and forward these installation instructions on to the vehicle owner for review. These instructions should be kept in the vehicle for its service life.

Torque Specs:

Size	Grade 5	Grade 8	Size	Class 8.8	Class 10.9
5/16”	15 ft/lbs	20ft/lbs	6MM	5ft/lbs	9ft/lbs
3/8”	30 ft/lbs	35ft/lbs	8MM	18ft/lbs	23ft/lbs
7/16”	45 ft/lbs	60ft/lbs	10MM	32ft/lbs	45ft/lbs
1/2”	65 ft/lbs	90ft/lbs	12MM	55ft/lbs	75ft/lbs
9/16”	95 ft/lbs	130ft/lbs	14MM	85ft/lbs	120ft/lbs
5/8”	135ft/lbs	175ft/lbs	16MM	130ft/lbs	165ft/lbs
3/4”	185ft/lbs	280ft/lbs	18MM	170ft/lbs	240ft/lbs

trailfortress.com/rough-country-front-shackle-reversal-kit-5059

KIT CONTENTS:

Rear Shackle x2
Driver Fr Stationary Bracket x1
Pass Fr Stationary Bracket x1
Cross Brace x1

TOOLS NEEDED:

9/16” Socket / Wrench
3/4” Socket / Wrench
13/16” Socket
7/8” Socket
1 1/8” Socket
Center Punch
Hand Grinder
Hammer
3/8” Drill Bit
3/4” Drill Bit
Drill
Spray Paint

HARDWARE INCLUDED:

1/4-28 Grease Fitting x2
7/8” O.D. Sleeve x2
Poly Bushing x4
3/8-16 x 1.25 Hex Head Bolt x4
3/8” Flat Washer x8
3/8-16 Top Lock Nut x4
1/2-13 x 4.50 Hex Head Bolt x2
1/2” Flat Washer x4
1/2-13 Top Lock Nut x2
9/16-12 x 4.50 Hex Head Bolt x2
9/16” Flat Washer x4
9/16-12 Top Lock Nut x2
3/4-10 x 1.5 Hex Head Bolt x2
3/4” Flat Washer x4
3/4-10 Top Lock Nut x2



FRONT INSTALLATION INSTRUCTIONS

1. Lift front of vehicle and place jack stands under front of frame rails. Remove front wheels.
2. Support front axle assembly with stands and remove the spring u-bolts using a 3/4” socket. **See Photo 1.**
3. Remove springs using a 3/4 socket on the front shackle and the rear using a 13/16 & 7/8 socket.
4. Remove the lower sway bar link from the spring plate using a 3/4” socket. **See Photo 2.**

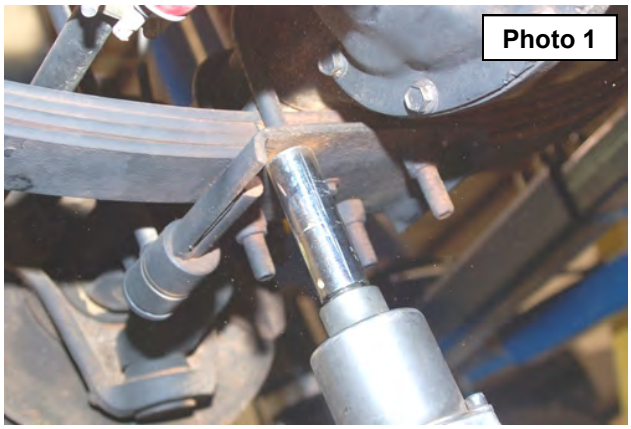

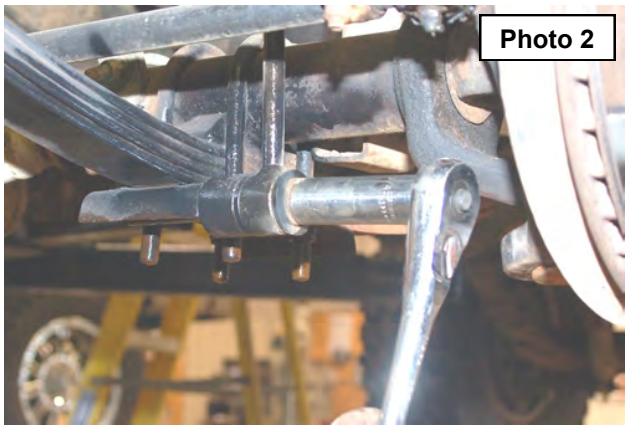

5. Remove the front shackle mounts and the frame mounts from the frame rail. To remove rivets, center punch rivet head and drill 5/16” deep with a 3/8” drill bit. Then using a chisel and hammer, strike the head of the rivet to remove it. Use a punch to drive the remaining part of the rivet free.
6. Clean the area’s of the frame where you are going to install the new mounts. If any weld or sharp edges exist, grind down smooth. Take care not to scar frame rails and paint any sanded areas to prevent rust.
7. Install front brackets with the large 3/4” side hole onto the outside of the front frame rail. Install the 3/4 x 1.25 supplied bolt into the bracket and frame rail. NOTE: It may be necessary to drill the frame to clearance the 3/4” bolt. If so use a 3/4 drill using the new bracket as a locator. Install the 3/8 x 1.25 bolt in the lower side of the bracket and the stock hardware. **See Photo 3.** This hole will line up with the factory hole on the underside of the frame rail. Repeat steps on the other side.
8. Install the cross tube brace between the two front brackets using the supplied 3/8” x 1.25 bolts . The factory bolts will be installed in this bracket in a later step when the leaf springs are reinstalled. **See Photo 4.**
9. Tighten all hardware using a 1 1/8” wrench on the 3/4” bolts and 9/16” wrench on the 3/8 bolts.

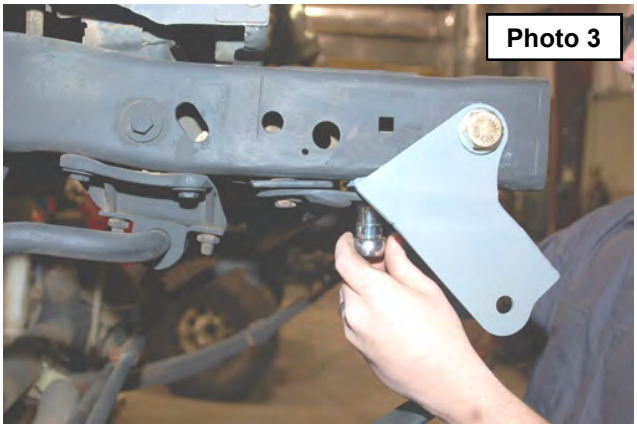



10. Reverse the springs and install what was the rear part of the leaf springs in the front mount using the supplied 9/16" x 4 1/2" bolts, nuts and washers. Only slightly tighten at this time. Raise rear of the leaf spring up to meet the new rear shackle . **See Photo 5.**

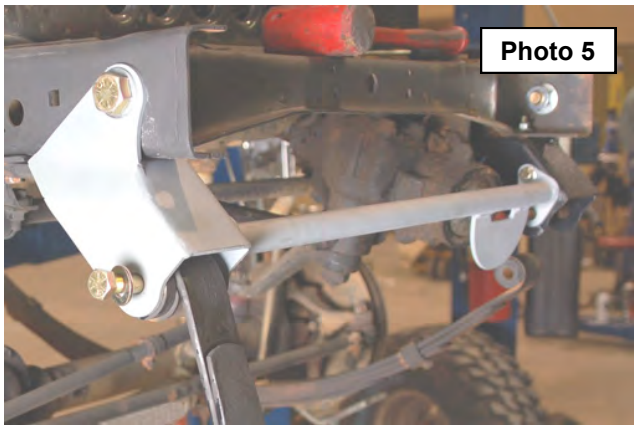

11. Install 2 supplied bushings into the supplied shackle then insert the supplied sleeve into the center of the bushings
12. Install the grease fitting into the shackle using an 8mm wrench.
13. Install the shackle into the OE frame mount using 1 of the supplied 1/2-13 x 3.5 hex head bolts (2) 1/2" flat washers and (1) nylock nut. **See Photo 6.**

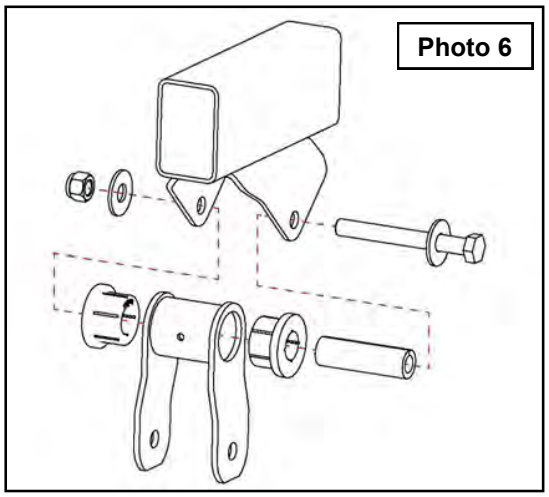

14. Raise the leaf spring up into the rear shackle. Secure using the OE hardware.
15. Lower the front axle onto the center pin of the leaf spring. Then Install the OE leaf spring plates with the OE u-bolts and tighten using a 3/4" socket. Reinstall the sway bar links on the spring plate using a 3/4" socket.
16. Install the tires / wheels on the Jeep.
17. Lower the vehicle to the ground and tighten all hardware including the spring bolts. The general rule is to tighten the bolts until the polyurethane bushings slightly bulge. DO NOT over tighten these bolts, as that will contribute to a rougher ride.

POST INSTALLATION INSTRUCTIONS

1. Check all fasteners for proper torque. Check to ensure for adequate clearance between all rotating, mobile, fixed, and heated members.
2. Install Warning to Driver decal on sun visor.
3. All components must be retightened after 500 miles, and every three thousand miles after installation.

Thank you for choosing Rough Country for all your suspension needs.

By purchasing any item sold by Rough Country, LLC, the buyer expressly warrants that he/she is in compliance with all applicable, State, and Local laws and regulations regarding the purchase, ownership, and use of the item. It shall be the buyers responsibility to comply with all Federal, State and Local laws governing the sales of any items listed, illustrated or sold. The buyer expressly agrees to indemnify and hold harmless Rough Country, LLC for all claims resulting directly or indirectly from the purchase, ownership, or use of the items.