TRAIL FORTRESS

BUILT FOR THE TRAIL. CHECKED FOR YOUR TRUCK.

Rough Country 5040 Installation Instructions

Frame Support Kit: Weld-In Install

Part number: 5040

trailfortress.com/frame-support-kit-weld-in-install-rough-country-5040

Scan for fitment, price and install help

Rough Country

THE ORIGINAL OFF ROAD PEOPLE

INSTRUCTION SHEET

'73 - '91 CHEVY/GMC FRAME REINFORCEMENT FOR SOLID AXLE ½ AND ¾ TON TRUCKS 5040

Please read instructions before beginning installation. Check the kit hardware against the parts list. Be sure you have all needed parts and know where they go.

5040 PARTS LIST

GM Frame Section Bottom
GM Frame Section Side

NOTES:

1. This bracket system is not intended as a frame rail section replacement. It is intended use is a frame section support for use on frames where minor fatigue and/or cracks have started to develop about the steering gear box area.
2. Before starting verify that the frame rail is straight and in alignment. If you can not determine this yourself check with your local frame shop.
3. **This bracket system requires welding. The welding should be done by a certified welder** (welder needs complete understanding of MIG welding). Welding wire to be used is ER-70-S, using 100% CO2sheilding gas in a controlled environment.

INSTALLATION INSTRUCTIONS

Step 1. Lift front of vehicle and place safety stands under front of axle housing. Remove drivers side tire.

Step 2. Remove steering gear box. This is done by removing steering drag link assembly, steering shaft (you will probably need a pitman arm separation tool)and gear box to frame bolts.

Step 3. Place side section on frame and determine if brake line will have to be relocated for installation. After installation reinstall brake line by drilling a whole in frame support.

Step 4. On vehicles equipped with power steering you must remove hydraulic lines from gear box prior to removing gear box from frame. Keep lines in upright position and seal ends so contamination can not enter system.

Step 5. Check frame for cracks. At the end of any cracks drill a small stop hole (1/8 " diameter). Grind a small v-grove along the length of the crack. Be careful to only grind a minimum of material away. Try not to enlarge the crack.

Step 6. Fully weld the length of all cracks and then grind flush so that the new support plate lays as flat as possible against the frame rail.

Step 7. Install new side support plate (included in kit) using bolts, nuts and washers on frame rail through gear box mounting holes. Tighten the four bolts. (It may be necessary to use a c-clamp to obtain a flat, flush fit on the support plate.)

Step 8. With plate installed and frame free of any dirt, grease, oil or scale, you can begin to skip weld unit into place. Do not make a solid continuous weld. Skip weld only in areas shown in the diagrams . Plug weld the elongated holes for added coverage.

Step 9. Now the skip weld of the side plate is complete, you must go back and fully weld the bottom edge of this plate to the frame.

Step 10. Install the bottom cover plate so that the two holes in it line up with the existing rivets on the bottom of the frame rail.

Step 11. Once again c-clamp the unit for as plat and flush fit as possible for welding.

Step 12. Do not make a solid continuous weld. Skip weld only in areas shown.

Step 13. Install steering gear box onto frame. Wire brush the threads on the four retaining bolts and clean out the threaded holes in the gear box. Torque the four bolts in a criss-cross pattern to 70 ft. lbs.

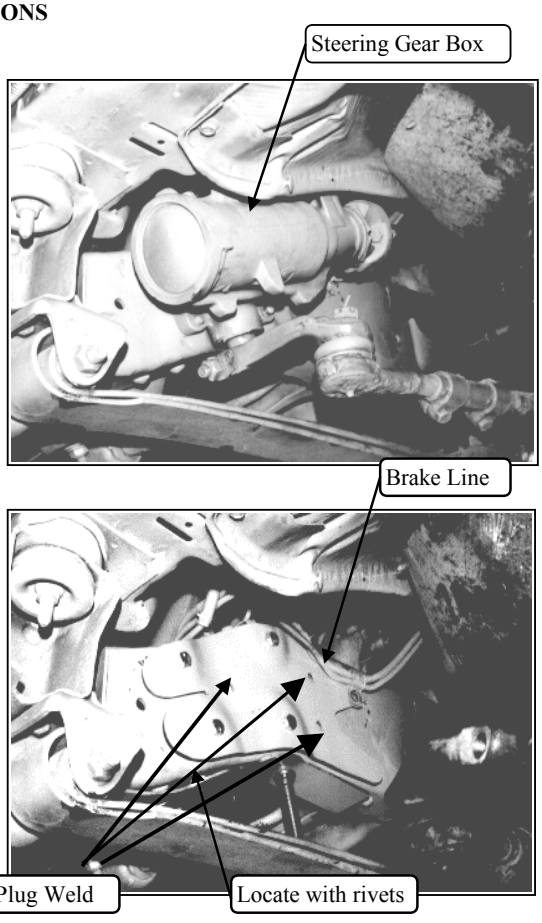

trailfortress.com/frame-support-kit-weld-in-install-rough-country-5040

Step 14. Install steering shaft to gear box and torque fastners to 25 ft. lbs.

Diagram #1

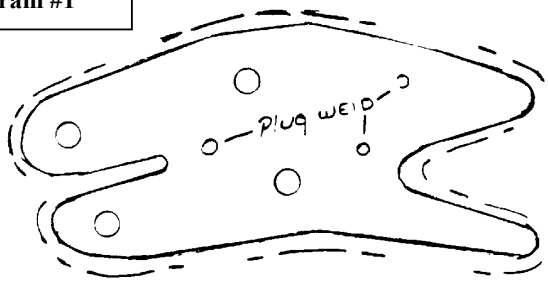

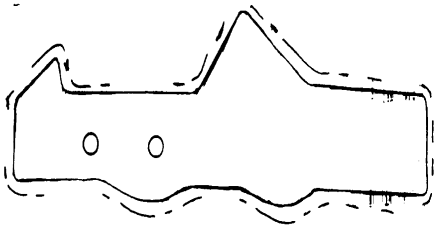

Diagram #2

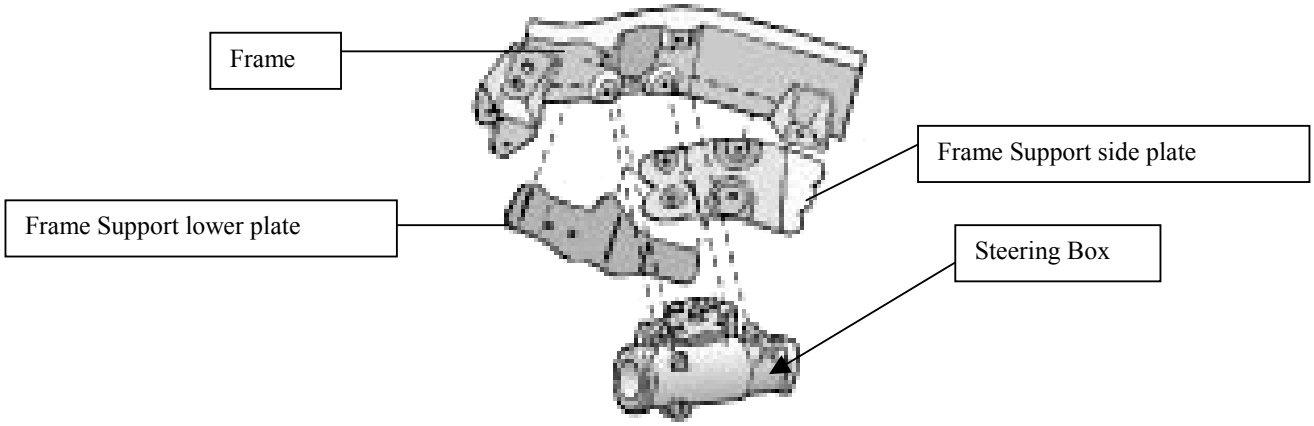

If question exist we will be happy to answer any questions concerning the design, function, and correct use of our products.

MAINTENANCE INFORMATION

It is the ultimate buyers responsibility to have all bolts/nuts checked for tightness after the first 100 miles and then every 1000 miles. Wheel alignment steering system, suspension and driveline systems must be inspected by a qualified professional mechanic at least every 3000 miles.

trailfortress.com/frame-support-kit-weld-in-install-rough-country-5040