TRAIL FORTRESS

BUILT FOR THE TRAIL. CHECKED FOR YOUR TRUCK.

Rough Country 50120525 Installation Instructions

Hard Roll Up Bed Cover for Chevrolet Colorado (2023-2025)

Part number: 50120525

trailfortress.com/rough-country-hard-roll-up-bed-cover-50120525

Scan for fitment, price and install help

ROUGH COUNTRY

Hard Roll up Tonneau Cover

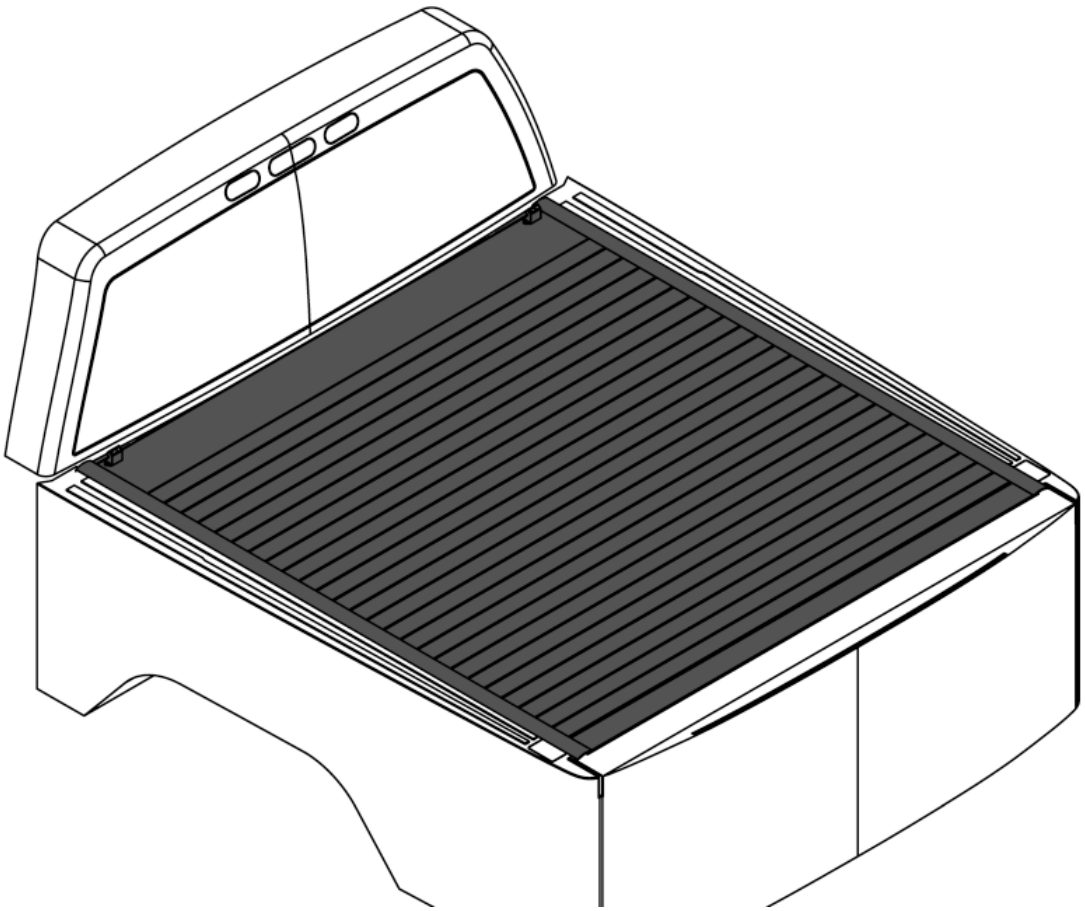

Parts included in the carton

Item	Description	Qty	Picture
F1	Roll up Cover	1	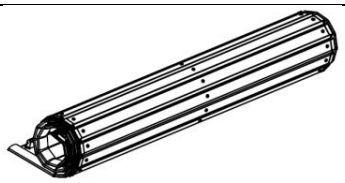
F2	Left Side Rail	1	
F3	Right Side Rail	1	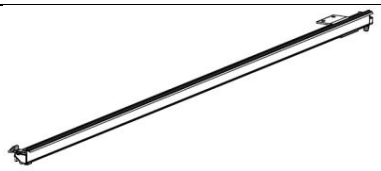
F4	Drain Tube	2	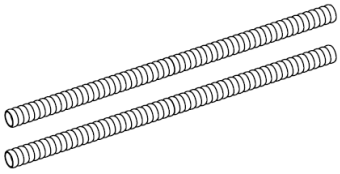
F5	Security Straps	2	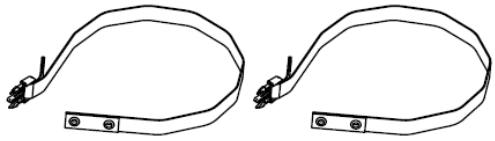
F6	Front Bolt	4	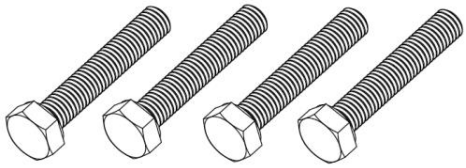
F7	Flat Washer	4	
F8	Spring Washer	4	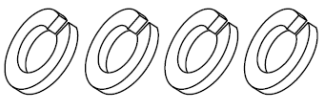

F9	T type Nut	4	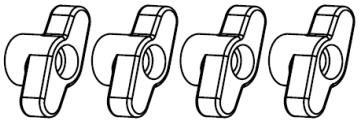
F10	Foam Seal	1	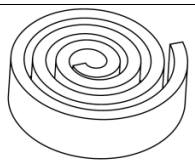
F11	Clamp	4	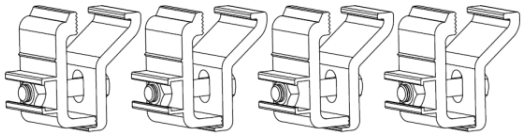
F12	17mm Spanner	1	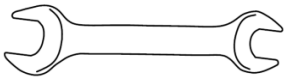
F13	5mm Hex key	1	
F14	4mm Hex key	1	
F15	Extra replacement Velcro	6	
F16	Installation Manual	1	

STEPS:

1. Check contents of carton with the list above.
2. Stick the foam seal tape (F10) on the front edge of the bed. The tape length is same as the bed front inner width. Cut off the extra foam.

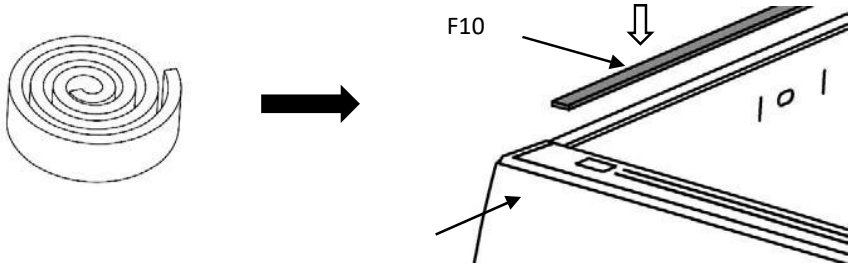

3. Insert the drain tube on the side rail end.

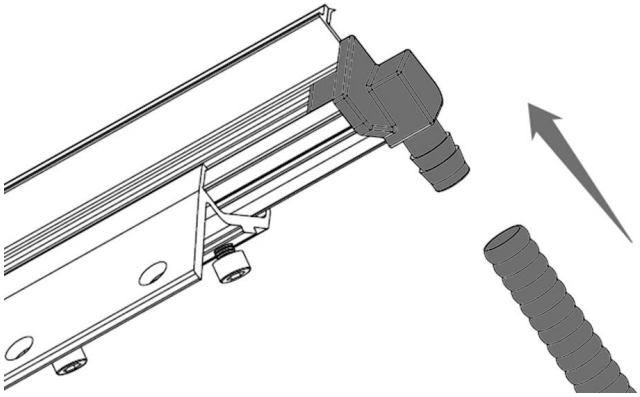

4. Place the side rail(F2/F3) against the bed inside wall, and push it to the front wall of truck bed.

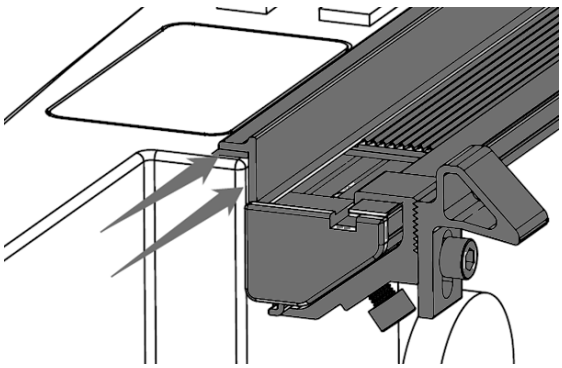

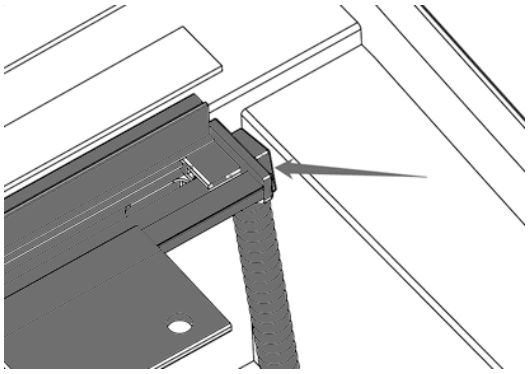

5. Place one clamp (F11) at the front of the side rail and one at the rear (please make sure the rear clamps is placed on the position that is closest to tailgate). Tighten the clamps each side. Then insert the drain tubes (F4) into the front of bed wall.

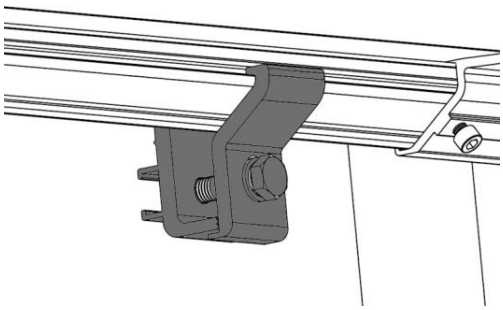

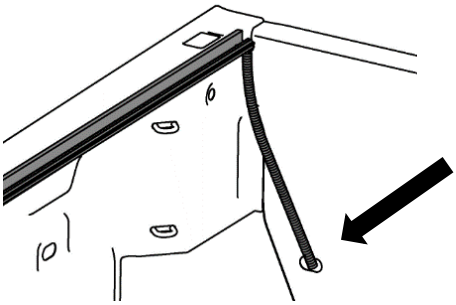

6. Place the hard roll up cover (F1) on the side rails.
   * Be attention, there are two bolt holes on the side rail mounting plate, and make sure the two bolt holes match the position of the two grooves on the back of the front panel of cover.
   * Be attention, the cover should be placed in the center. The gaps between the cover panel and the 2 side rails should be even.

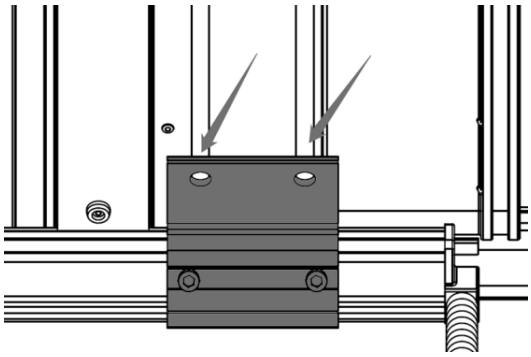

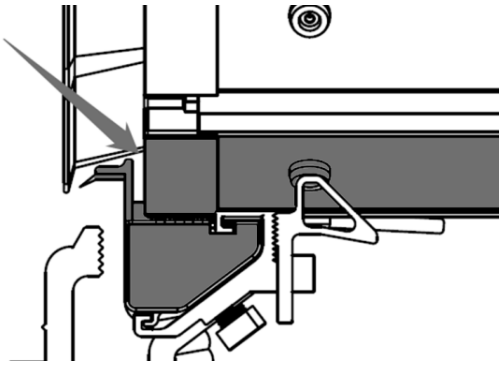

7. Roll up the cover front panel, making the back of front panel facing up. Insert the Front Bolt (F6) into the grooves of the front panel.

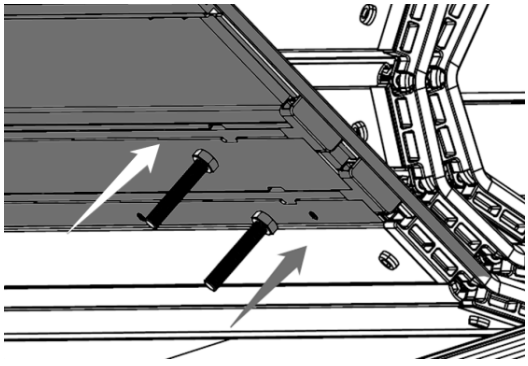

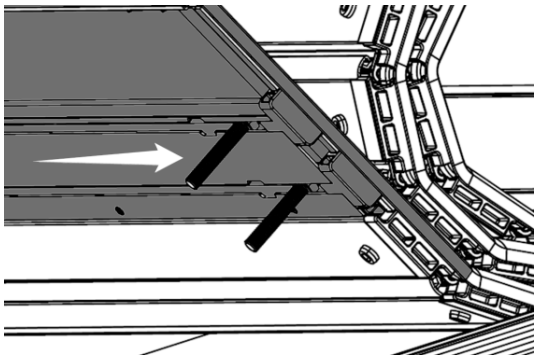

8. Close the cover front panel, and insert the Front Bolts (F6) into the 2 bolt holes of side rail mounting plate.

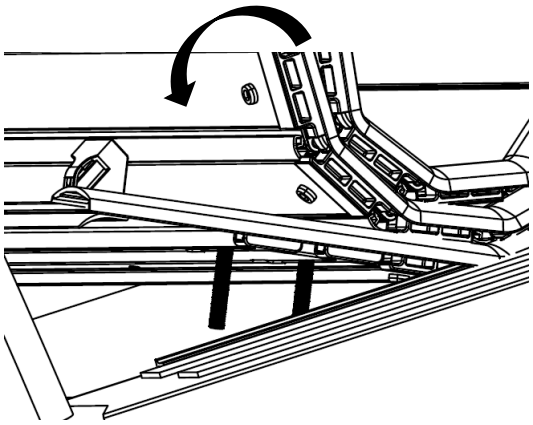

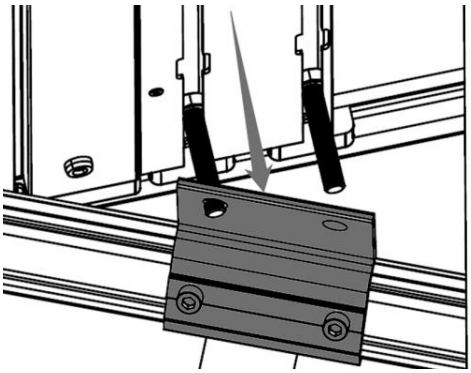

9. Insert the Security Straps (F5) onto the Front Bolt firstly, then insert Flat Washer (F7), Spring Washer (F8), and T Type Nut (F9). Tighten the T type nut firmly.

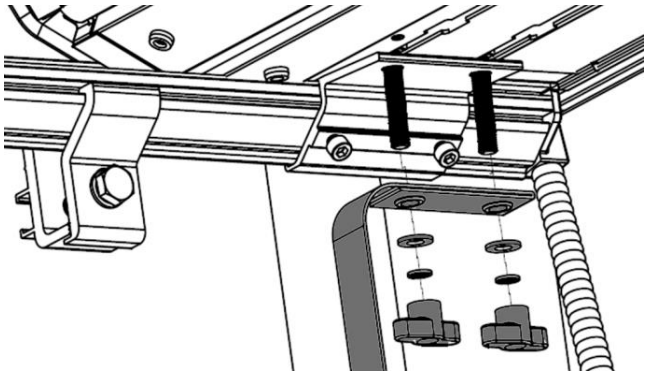

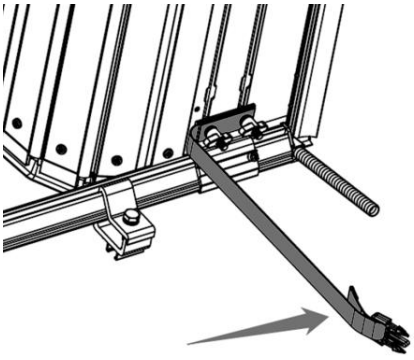

10. Close the cover, adjust the locking base back-and-forth to accommodate the groove of the rear panel. Try to close and open the cover rear panel several times. Make sure the Locking Base does not interfere with the groove of cover rear panel. Then tighten the bolt to fix the locking base on the side rail.

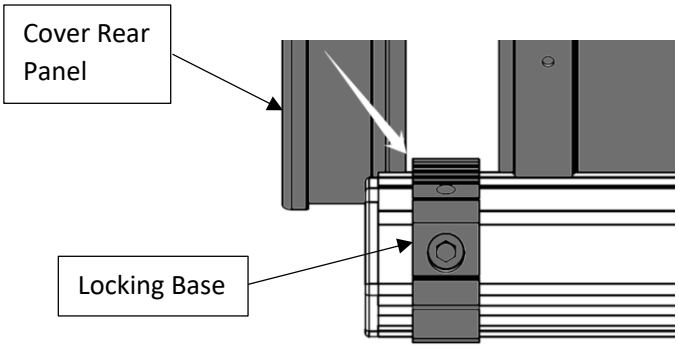

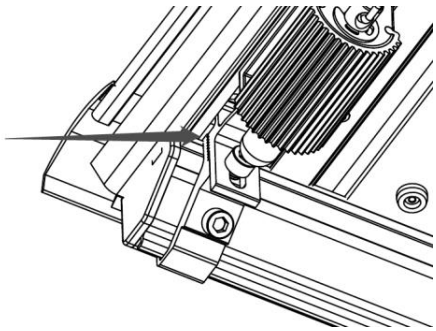

11. If the locking pin on the cover interfere with the locking tongue on the locking base, adjust the locking tongue up and down to a proper position, then tighten the bolt to fix the locking tongue.

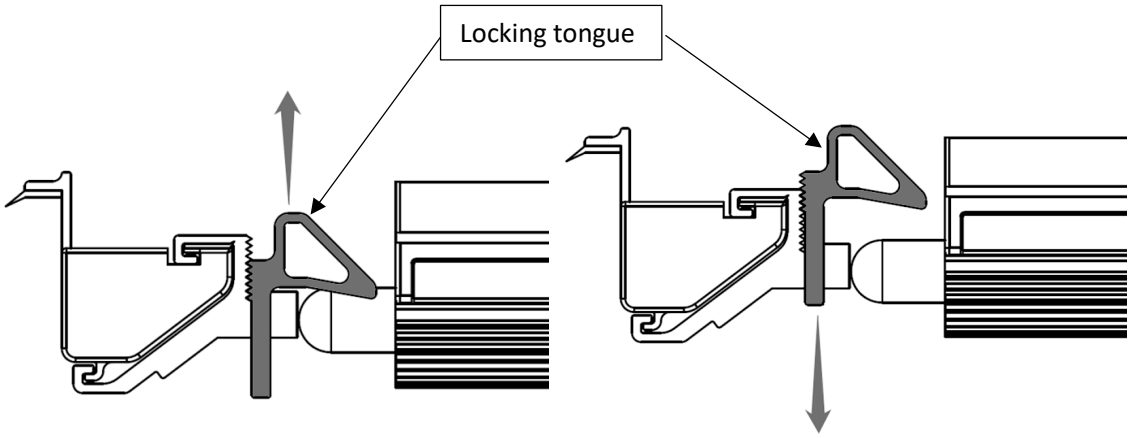

12. After truck tailgate closed, if the tailgate is not touching the cover rear panel rubber seal, there could be some water leaking on the tailgate part. Can adjust the whole cover a little closer to tailgate, by moving the side rail (F2/F3) a little back toward tailgate (loosen the side rail clamps to move, then tighten).

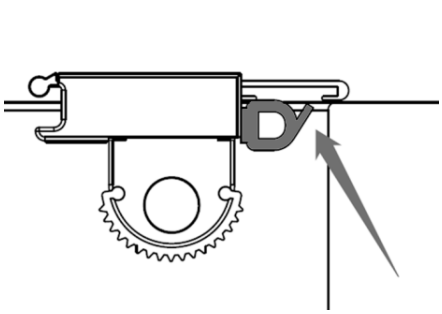

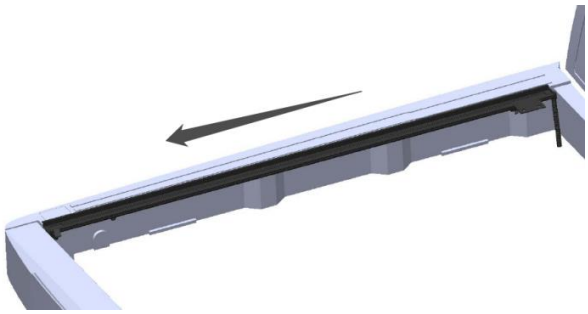

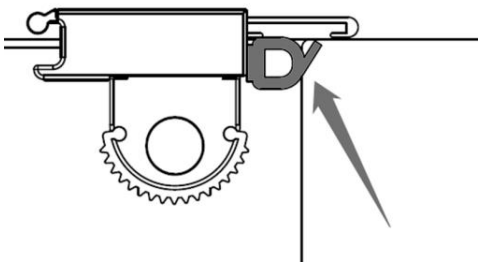

CLEANING

Clean with a mild soap and water. Do not expose to any type of fuel including gasoline, diesel or oils and chemicals of any nature.

⚠ WARNINGS

READ AND UNDERSTAND ALL INSTRUCTIONS. FAILURE TO FOLLOW ALL INSTRUCTIONS LISTED, FAIL TO READ MAY RESULT SERIOUS INJURY.

• DO NOT CUT OR MODIFY THE TONNEAU COVER OR MOUNTING ACCESSORIES.

• DO NOT EXCEED THE VEHICLE MANUFACTURER'S WEIGHT LIMITS.

• DO NOT USE DAMAGED OR EXCESSIVELY WORN PRODUCTS. CONTACT US IF YOU ARE UNSURE.

• THE WARNINGS, CAUTIONS, AND INSTRUCTIONS DISCUSSED IN THIS INSTRUCTION MANUAL CANNOT COVER ALL POSSIBLE CONDITIONS OR SITUATIONS THAT COULD OCCUR. DISCRETION AS TO PROPER USE IS DEPENDANT ON THE USER AND ALL PRECAUTIONS MUST BE TAKEN TO PROPERLY CARE FOR THE BED COVER.

INSTALLATION PRECAUTIONS

- Follow DOT regulations regarding installation and use.
- Park truck on a flat, level, hard surface well away from traffic. Place transmission in park.
- Verify that installation surface has no hidden wires before installing clamps and fasteners.
- Install only according to these instructions. Improper installation can create hazards.
- Wear ANSI-approved safety goggles and heavy-duty work gloves during assembly and installation.
- Keep installation area clean and well lit.
- Do not install when fatigued or under the influence of drugs or medication.
- Weight capacity and other product capabilities apply to properly and completely installed product only.

USE PRECAUTIONS

- Do not exceed rated weight capacity of Tonneau Cover.
- Do not exceed rated weight capacity of truck. Refer to truck's Gross Vehicle Weight Rating.
- Use as intended only.
- Inspect before every use; do not use if parts loose or damaged.
- This product is not a toy. Do not allow children to play with or near this item.
- Maintain product labels and nameplates. These carry important safety information.
- The warnings, precautions, and instructions discussed in this instruction manual cannot cover all possible conditions and situations that may occur. It must be understood by the operator that common sense and caution are factors which cannot be built into this product, but must be supplied by the operator.

Warranty

Terms of Warranty

The structure of your cover is warranted to be structurally free from defects in material and workmanship for (3) three years from the retail date of purchase. The hinges, seals, and hardware are warranted to be free from defects in material and workmanship for (3) three years from the retail date of purchase. This warranty applies only to the original purchaser and is nontransferable. Your original sales receipt will serve as proof of purchase for this warranty. Before credit can be issued on a warranty claim, proof of defect may be required. This can be determined at the time of the claim.

Exclusions of Warranty

Not covered under this warranty is failure due to neglect, proper installation including any modifications to installation hardware, alterations, addition of equipment, abuse, accident, weather related damage, exposure to chemicals that are labeled "safe for rubber" and normal wear from lack of maintenance.