Rough Country 4918230 Installation Instructions

4-Inch Lift Kit for Ford F-350 4WD, Straight Front Axle

Part number: 4918230

trailfortress.com/rough-country-4-inch-lift-kit-4918230

Scan for fitment, price and install help



80-97 F250 4” KIT INSTRUCTIONS

Rough Country recommends this system be installed by a certified technician. In addition to these instructions, professional knowledge of disassemble/reassembly procedures as well as post installation checks must be known. Attempts to install this system without this knowledge and expertise may jeopardize the integrity and/or operating safety of the vehicle.

Please read instructions before beginning installation. Check the kit hardware against the parts list. Be sure you have all needed parts and know where they go.

With the installation of all lift kits and larger tires it is important to check the condition of your steering stabilizer. If the stabilizer is worn or is leaking it should be replaced. Steering stabilizers are designed to restrain “bump steering” and front end vibration, giving added life to tires, ball joints, and other steering components. A multiple stabilizer kit is recommended for vehicles equipped with a snow plow, winch, or larger tires

PRODUCT USE INFORMATION

As a general rule, the taller a vehicle is, the easier it will roll. Offset, as much as possible, what is lost in rollover resistance by increasing tire track width. In other words, go "wide" as you go "tall". Many sportsmen remove their mud tires after hunting season and install ones more appropriate for street driving; always use as wide a tire and wheel combination as possible to enhance vehicle stability.
We strongly recommend, because of rollover possibility, that the vehicle be equipped with a functional roll-bar and cage system. Seat belts and shoulder harnesses should be worn at all times. Avoid situations where a side rollover may occur
Generally, braking performance and capability are decreased when significantly larger/heavier tires and wheels are used. Take this into consideration while driving.
Do not add, alter, or fabricate any factory or after-market parts to increase vehicle height over the intended height of the Rough Country product purchased. Mixing component brands is not recommended.
Rough Country makes no claims regarding lifting devices and excludes any and all implied claims. We will not be responsible for any product that is altered.

If question exist we will be happy to answer any questions concerning the design, function, and correct use of our products.

NOTICE TO DEALER AND VEHICLE OWNER

Any vehicle equipped with any Rough Country product should have a “Warning to Driver” decal installed on the inside of the windshield or on the vehicle’s dash. The decal should act as a constant reminder for whoever is operating the vehicle of its unique handling characteristics.
INSTALLING DEALER - it is your responsibility to install the warning decal and forward these installation instructions on to the vehicle owner for review. These instructions should be kept in the vehicle for its service life.

INSTALLTION INSTRUCTIONS

1. Raise the front of the vehicle and place jack stands under the frame rails, a few inches behind the front spring rear hangers. Remove the wheel and tires.
2. Remove the cotter pin and nut from the drag link stud where it attaches to the pitman arm. Use a ball joint separator to detach the drag link from the pitman arm. Tie the linkage up and out of the way.
3. Place a floor jack under each axle towards the outside ends of the axles. Put a slight load on the jacks but do not raise the vehicle off of the stands.
4. Remove the spring u-bolts. Ease down the jacks and remove the stock springs. The axles will be resting on the jacks at this point. Place a jack stand under the hub assemble so to not over extend the brakelines.
5. Remove the bolts that attach the axles to the axle brackets. Remove both axle pivot brackets. Retain the hardware it will be reused.
6. Install the Rough Country drop axle pivot brackets using the stock hardware. Torque to 75-110 ft/lbs. NOTE: Bracket number 94031040 is for the driver side axle beam and 94041040 is for the passenger side axle beam.

trailfortress.com/rough-country-4-inch-lift-kit-4918230

7. Install axle support brackets, 94051040, drivers side, and 94061040 passenger side as shown and bolt them to the axle pivot brackets using the supplied 7/16" x 1 ¼" bolts, washers and nuts. Connect the two axle pivot brackets together using the 7/16" hardware and tighten to 70 ft. lbs. Position the axles into the drop brackets and install the axle bolts. Torque to 150 ft/lbs.

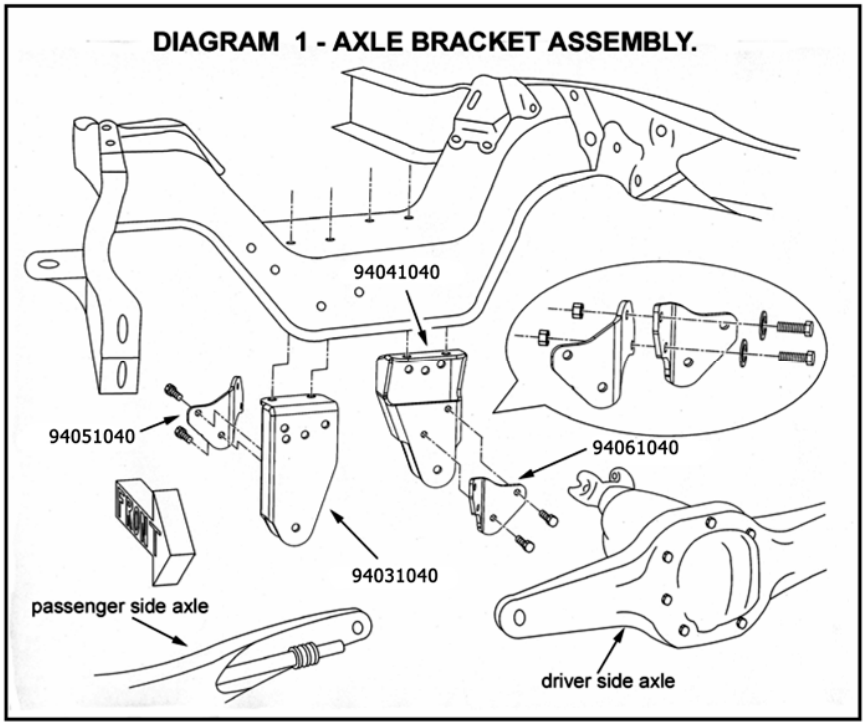

8. Position the Rough Country leaf springs with the long end towards the rear of the vehicle. Bolt up the rear eye; torque to 120-150 ft/lbs. Because of the spring arch, it may not seem long enough to bolt up to the front shackle. If so, place some type of spacer and pry bar between the springs attaching point at the shackle and the spring eye. Jack up the axle ands as pressure is applied to the spring it will become longer and will enable the spring to be bolted into place. This procedure can be very dangerous, use caution when loading the spring. Another alternative is to slot the frame to allow for the shackle to move rearward.
9. Before securing the springs to the axles, be sure the center pin on the spring seats properly on the axles. Install the new u-bolts and torque to 130 ft/lbs.
10. Install the new Heckethorn shock absorbers and install the tires and wheels.
11. Remove the jack stands and lower the vehicle to the ground.
12. If a new pitman was purchased install it at this time per separate instructions. If not, attach the drag link to the pitman arm. Torque the nut to 55-75 ft/lbs. and install the cotter pin.

REAR INSTALLTION

1. Chock the front tires. Jack up the rear of the vehicle and support with jack stands.
2. Remove the rear shocks and discard. Retain the factory hardware for re-use. If equipped with a factory sway bar remove the bar from the end links at this time. Extended end links are recommended. Part #1023. If not purchasing new end links, cut and lengthen the stock sway bar links.
3. Remove the stock u-bolts and discard.
4. Lower the axle away from the springs to allow clearance for the 3" block. Pay attention not to over extend the drive shaft on the transfer case.
5. Install the block on the bottom of the factory block and install new u-bolts. Torque to 90-100 ft/lbs.
6. Install the new shock absorbers and tighten fasteners. If using new sway bar links install at this time.
7. Install the tires and wheels and lower the vehicle to the ground.

trailfortress.com/rough-country-4-inch-lift-kit-4918230

POST INSTALLATION INSTRUCTIONS

1. Check all fasteners for proper torque. Check to ensure there is adequate clearance between all rotating, mobile, fixed and heated members. Check steering gear for interference and proper working order. Test brake system.
2. Perform steering sweep. Check to ensure brake hoses have sufficient slack and will not contact rotating, mobile, or fixed members, adjust lines/brackets to eliminate interference and maintain proper working order. Failure to perform inspections may result in component failure.
3. Bump stops and extensions must be in place on all vehicles! Note: allowing suspension to over extend by neglecting to install or maintain stops and extensions may cause serious damage to OE and related components.
4. Re torque all fasteners after 500 miles. Visually inspect components and re torque fasteners during routine vehicle service.
5. Readjust headlights to proper settings if applicable.

MAINTENANCE INFORMATION

It is the ultimate buyers responsibility to have all bolts/nuts checked for tightness after the first 100 miles and then every 1000 miles. Wheel alignment steering system, suspension and driveline systems must be inspected by a qualified professional mechanic at least every 3000 miles.

Kit Contents

2- 8044 Front Leaf Springs
1- 6601 Power Steering Pitman Arms
1- 7577 Kit Box
- 1-94031040- Driver Side Axle Bracket
- 1-94041040- Pass Side Axle Bracket
- 1-94051040- Driver Side Support Brk
- 1-94061040- Pass Side Support Brk
- 4- 9/16”x3 1/8”x9.50” U-Bolts
- 4-5/8”x 3 5/8”x 15” U-Bolts
- 1-5/8” Bag
- 1-9/16” Bag
- 8-Spring bushings
- 4- Spring Sleeves

2- 8136 Shocks
2- 8111 Shocks

trailfortress.com/rough-country-4-inch-lift-kit-4918230



trailfortress.com/rough-country-4-inch-lift-kit-4918230