TRAIL FORTRESS

BUILT FOR THE TRAIL. CHECKED FOR YOUR TRUCK.

Rough Country 47420600B Installation Instructions

Hard Tri-Fold Bed Cover for 2016–2023 Toyota Tacoma (6' Bed)

Part number: 47420600B

trailfortress.com/rough-country-hard-low-profile-bed-cover-47420600b

Scan for fitment, price and install help

ROUGH COUNTRY

Hard Folding Cover

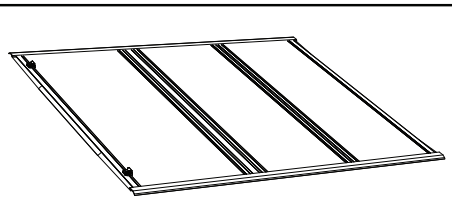

Fits: **47420500- 16-Current Tacoma Double Cab 5' bed**
47420600- 16-Current Tacoma Reg/Extended Cab 6' bed

THE ROUGH COUNTRY HARD FOLDING COVER COMES FULLY ASSEMBLED.

REMOVE CONTENTS FROM BOX. VERIFY ALL PARTS ARE PRESENT.

READ INSTRUCTIONS CAREFULLY BEFORE STARTING INSTALLATION.

DO NOT OVER TORQUE. A TORQUE WRENCH IS NOT NECESSARY.
IF PREFERRED, TORQUE IS APX 120 INCH LBS.

INSTALL TIME

30-60 min

Cutting Not Required

www.roughcountry.com

1-800-222-7023

3-YEAR WARRANTY

RC-Z5

PARTS LIST OF COMPONENTS			
PN	**Part Description/ Qty**	**PN**	**Part Description/ Qty**
1	Hard Folding Cover (1)		
2	Driver (Left) Mounting Rail (1)		
3	Passenger (Right) Mounting Rail (1)		
4	Clamps (x6)		
5	Header Rail Seal (x2)		
6	Front Mounting Retainer (x4)		
7	Drain Tubes (x2)		

Components

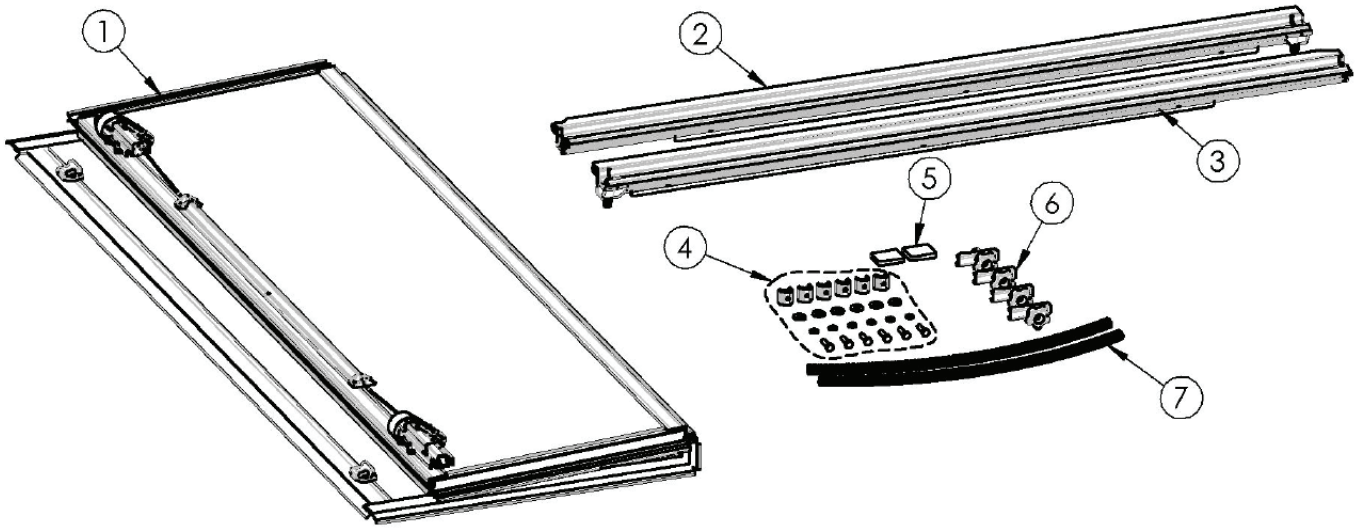

Tools Required

Ratchet & 1/2” Socket

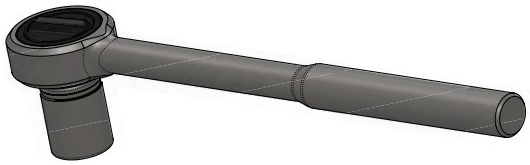

trailfortress.com/rough-country-hard-low-profile-bed-cover-47420600b

INSTALLATION PROCEDURE

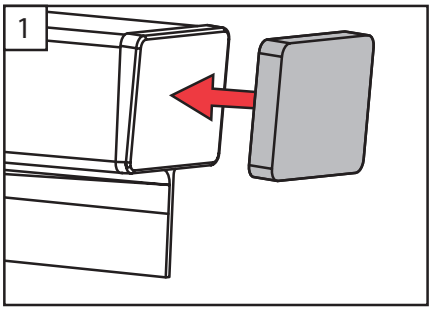

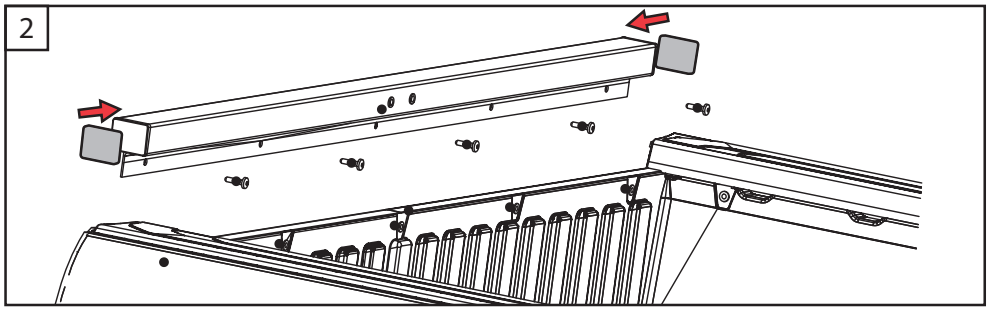

1 & 2. Using a T30 torx driver, remove the 5 fasteners securing the header rail to the bulkhead at the front of the bed. Adhere the gasket to the header rail end caps and reinstall the header rail.

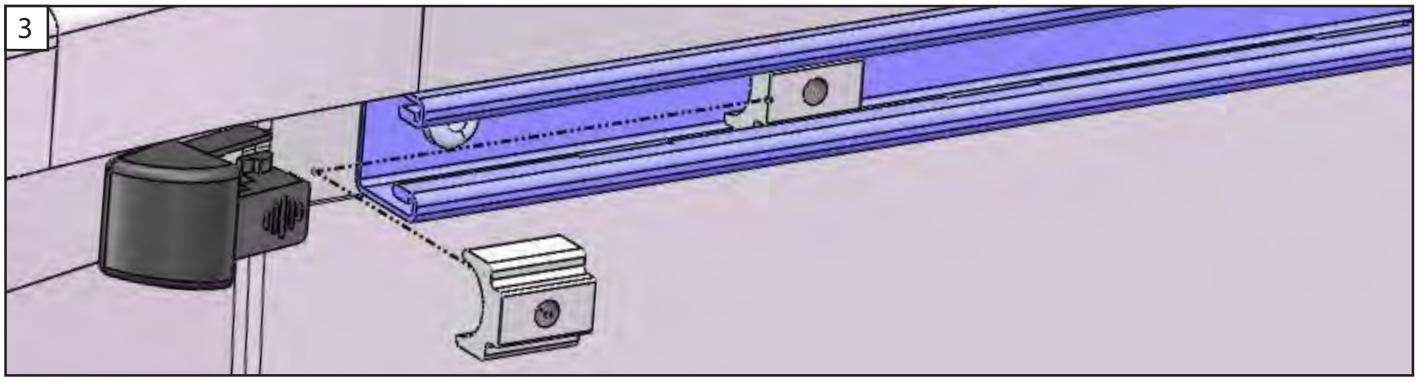

3. Slide the clamp assembly (3 per side) into the Utility rail, position one front, one center and one rear.

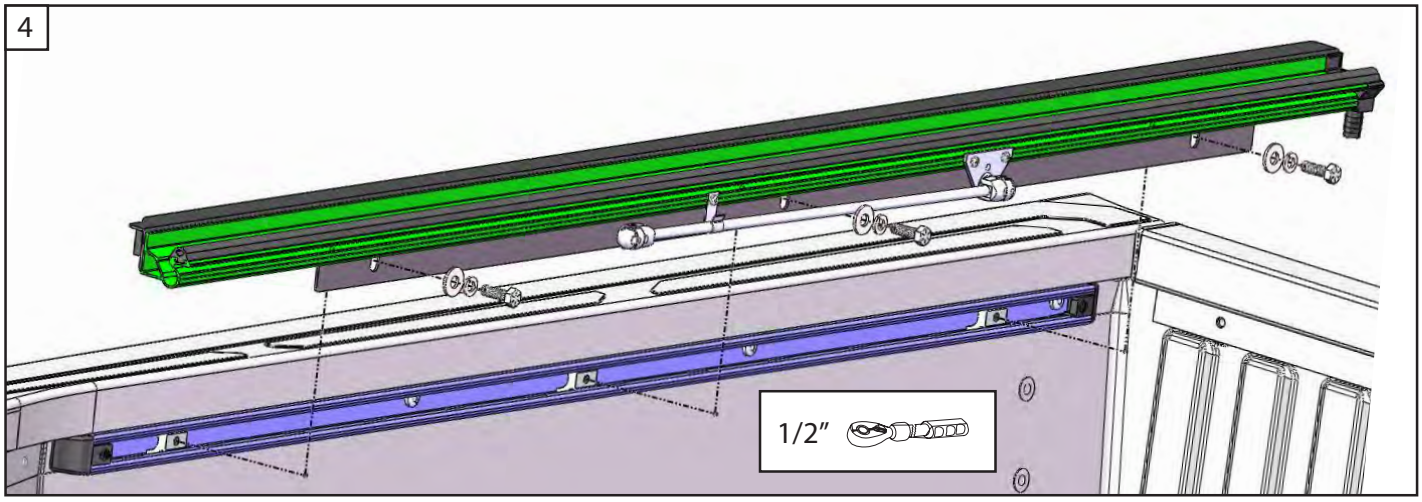

4 & 5. Using three (3) bolts per side attach both left and right side rails to the truck bed, Figure 2. The end of the mounting rail with the drain tube fitting will go towards the cab of the truck. Tighten the bolts using a 1/2″ wrench or socket.

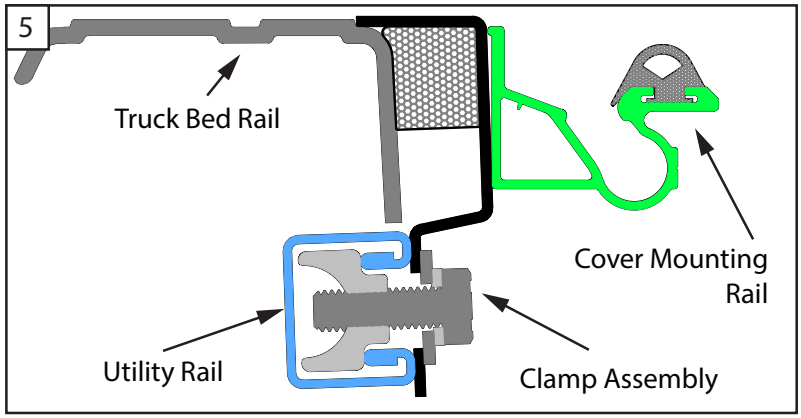

Warning! *Do not overtighten the clamp assembly. A torque wrench is not necessary. If preferred, torque is apx 120 inch lbs.*

Warning! *Clamps must be checked periodically for tightness. Failure to do so could result in damage to you or your property.*

trailfortress.com/rough-country-hard-low-profile-bed-cover-47420600b

5



5. Set the tonneau onto the mounting rails, the buckles should be to the front.

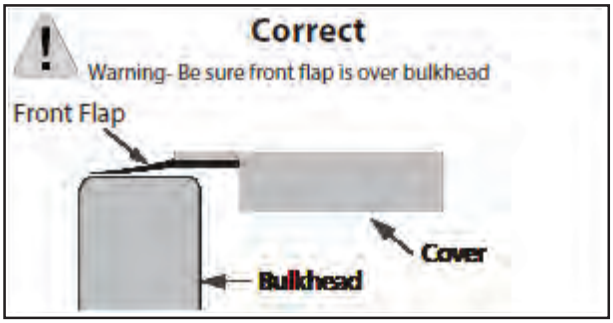

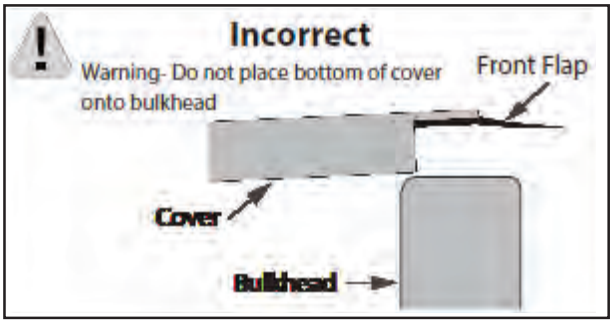

6

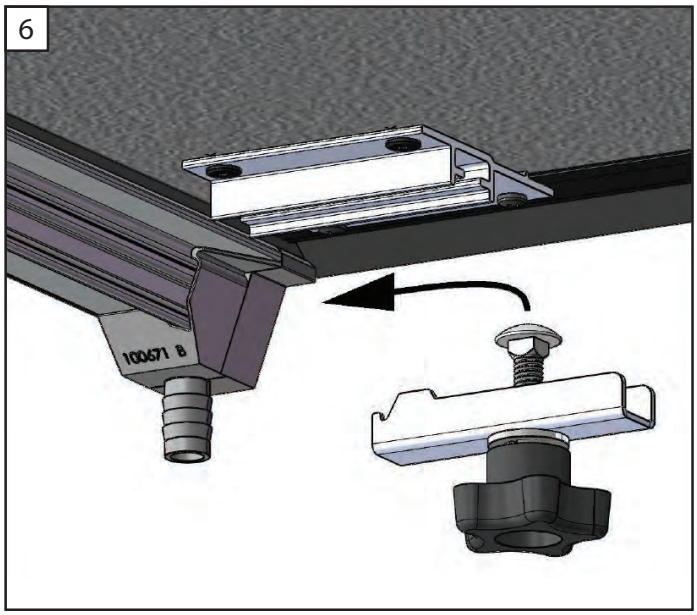

7

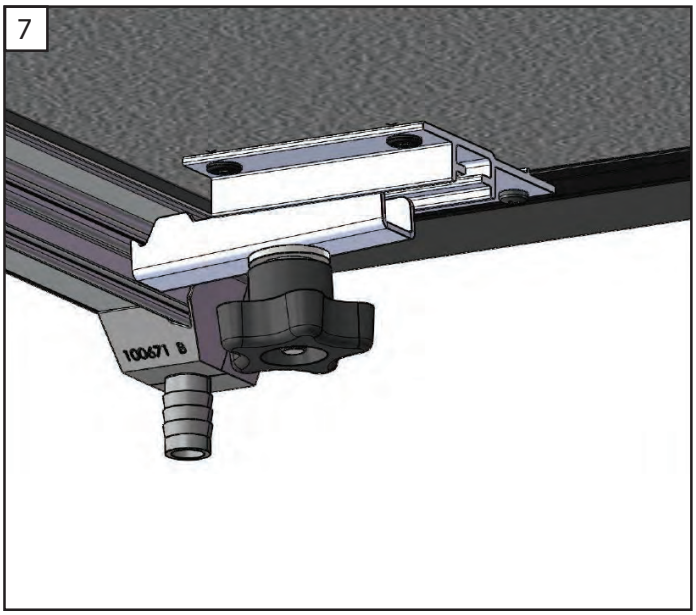

6 & 7. Assemble the four retainer clamps, slide each of them into the track on the underside of the tonneau, slide into position, but do not tighten at this time.

trailfortress.com/rough-country-hard-low-profile-bed-cover-47420600b

8

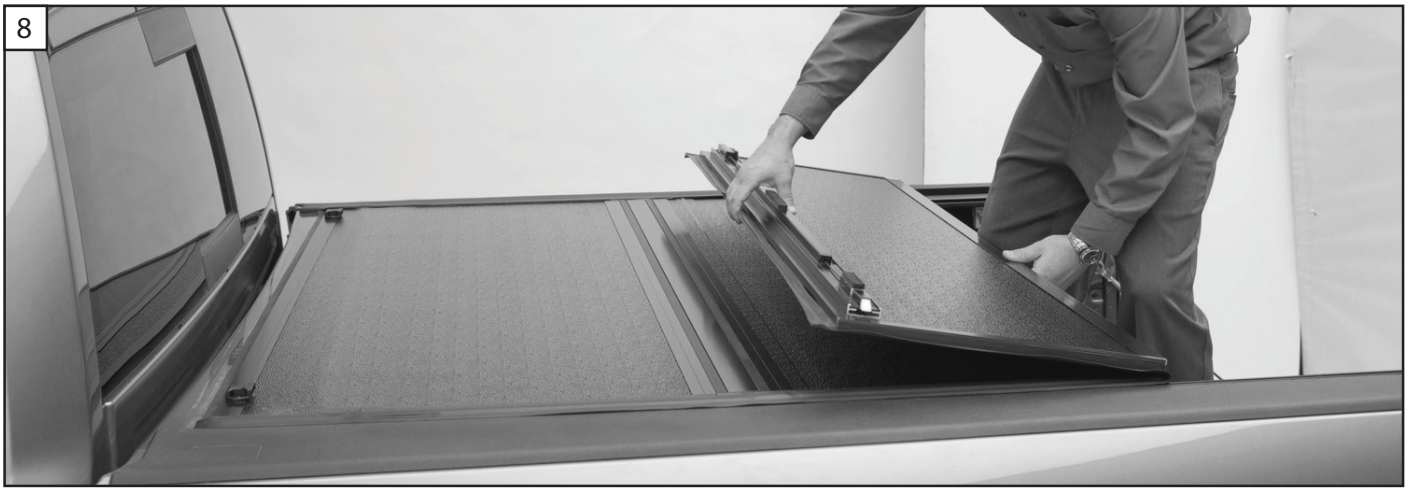

8. Carefully unfold the cover. Position the cover so it is centered side to side and front to back on the truck bed.

9

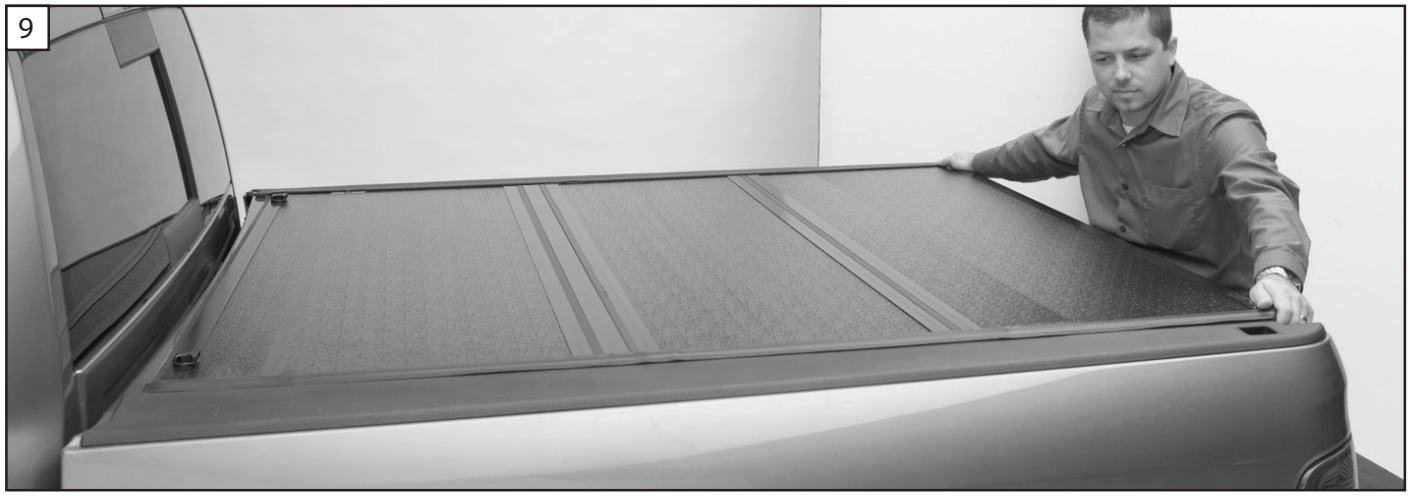

9. Test the rear latching assembly for smooth operation as this is the best indicator of the cover being positioned correctly. Be sure the latches on both sides are engaging with the cover mounting rail.
Note: If your truck is equipped with a tailgate protector, you may need to slightly raise the rear of the side mounting rails for the latches to engage properly.

10



11



10 & 11. Once the cover is located correctly, fold the cover to the open position. Pull the release cables on the rear panel to release it from the side rail. Take care to fold it gently so the position of the cover is not disturbed.

trailfortress.com/rough-country-hard-low-profile-bed-cover-47420600b

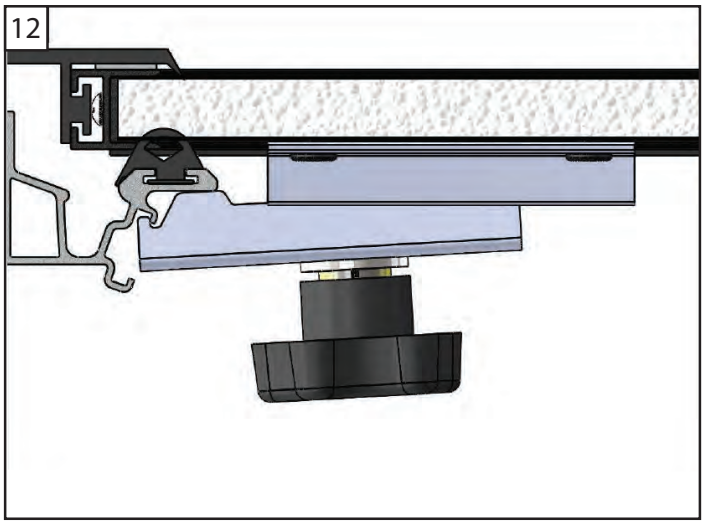

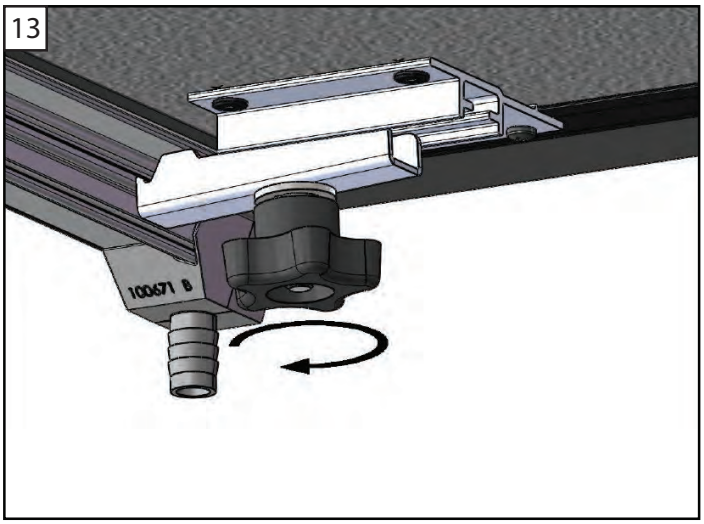

12 & 13. Once in the open position double check the clamp engagement to the side rail and tighten. Test the cover again for proper operation, adjust as needed, then tighten the star knobs.

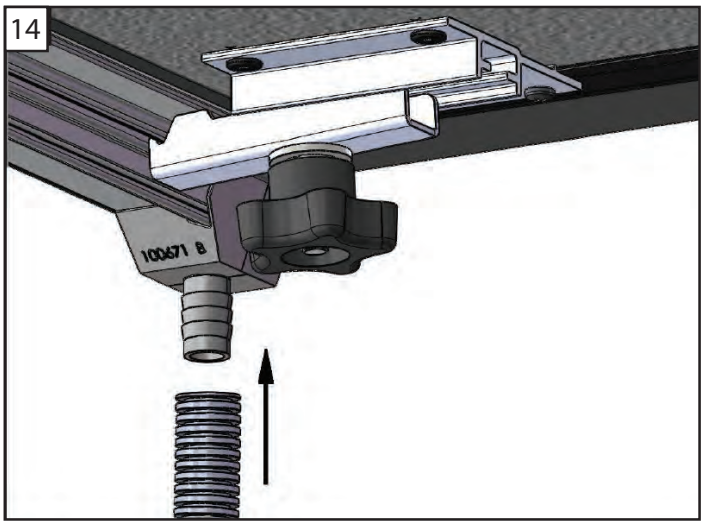

14. Attach the drain tubes to the fittings at the front of the bed rail and position the tubes to divert water out of the truck bed. This can be done by inspecting the area below the bed floor and drilling a 5/8" hole in the corner of the wheel well OR through an existing hole in the bed, enlarging it to 5/8"- Careful to not drill too far.

Note: *If you choose to drill holes, be sure to clean up the metal shavings.*

ATTENTION!

CAUTION:

Before drilling for drain tubes, verify area is free and clear of obstructions below the truck bed.

Operating Drilling Locations:

Inspect area below bed floor to insure proper clearance before drilling

1 Corner of wheel well

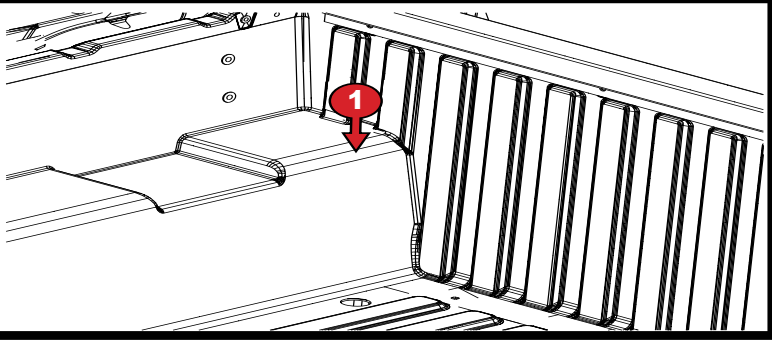

trailfortress.com/rough-country-hard-low-profile-bed-cover-47420600b

OPERATION INSTRUCTIONS





1 & 2. To open the cover: Lower the tailgate and pull the cable. While pulling on the cable lift the panel up and towards the cab.

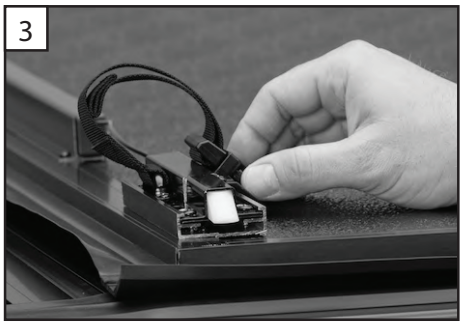





3, 4 & 5. Release the strap from the stowed position by squeezing the tabs. Attach the buckle at the bulkhead, pull the strap to take up the slack and secure the cover. Repeat this for the opposite side.

trailfortress.com/rough-country-hard-low-profile-bed-cover-47420600b

WARRANTY COVERAGE

Terms of Warranty
The structure of your cover is warranted to be structurally free from defects in material and workmanship for (3) three years from the retail date of purchase. The hinges, seals, and hardware are warranted to be free from defects in material and workmanship for (3) three years from the retail date of purchase. This warranty applies only to the original purchaser and is nontransferable. Your original sales receipt will serve as proof of purchase for this warranty. Before credit can be issued on a warranty claim, proof of defect may be required. This can be determined at the time of the claim.

Exclusions of Warranty
Not covered under this warranty is failure due to neglect, improper installation including any modifications to installation hardware, alterations, addition of equipment, abuse, accident, weather related damage, exposure to chemicals that are labeled "safe for rubber" and normal wear from lack of maintenance.

Caution
Always read the ingredients of any product you are using to clean your cover. Make sure that you only use products that are safe for use with rubber. Many chemicals contain material that will permanently discolor or damage your cover hinges and seals. This is not considered a manufacturer defect.

Own Responsibilities
Incidental or consequential damage or loss of contents due to use, neglect, lack of maintenance, misuse or abuse of the cover is the sole responsibility of the truck owner and operator. Paint damage to your truck is not covered under this warranty. When operating your truck always keep the cover in either the fully closed and latched position, or properly bucked in the approved open position. The approved open position would be the first and second panels stacked on top of each other with the second panel still latched to the bed rail and both buckles snapped and pulled tight. Do not lean the cover up against the cab of the truck and do not operate truck with the cover in the temporary open position.

Repair and Replacement
In the event that your cover is found to be defective under the terms of this warranty, it is at our discretion to repair or replace the defective part. All repairs must be made under our direction and we are not responsible for any transportation costs associated with warranted claim.

Maintenance & Care
The panels of your cover require only periodic cleaning with mild car wash soap. Avoid all use of abrasive type cleaners as they may dull the finish. Some chemicals and fluids such as insect repellents, oils, solvents, and lubricants could potentially damage the rubber hinges and seals and void the warranty.

FAQ

1. How difficult is it to install the tonneau cover?
Installing of tonneau cover is easy, please follow the steps in installation manual carefully.

2. How do I clean my tonneau cover?
Wash the tonneau same as your truck. We recommend using soap and water.

3. Will the tonneau cover scratch my paint?
No. Please follow the installation instruction manual carefully to avoid scratching paint.

4. Missing or Excess Hardware?
Re-check hardware count as per the part list.

5. Why is my tonneau cover not installing properly?
Ensure year, make, model, cab length and bed size of your vehicle is listed in the application and installation steps are followed correctly.

trailfortress.com/rough-country-hard-low-profile-bed-cover-47420600b