Rough Country 47420500B Installation Instructions

Low Profile Tri-Fold Bed Cover for Toyota Tacoma 5' Bed (2016-2023)

Part number: 47420500B

trailfortress.com/rough-country-hard-low-profile-bed-cover-47420500b

Scan for fitment, price and install help

Tri-Fold Flush Mount Hard Cover

2020+ Jeep Gladiator / 2016+ Toyota Tacoma

Parts included in the Cover Assembly:

Item	Description	Q	Picture
1-A	Tonneau Cover	1	
1-B	Left Side Rail	1	
1-C	Right Side Rail	1	
1-D	Front Bolt	2	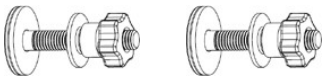
1-E	Drain Tube	2	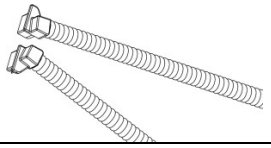
1-F	Front Support Plate (Including Bolts)	2	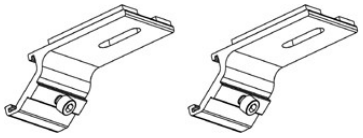
2-G	Clamp Assembly	4	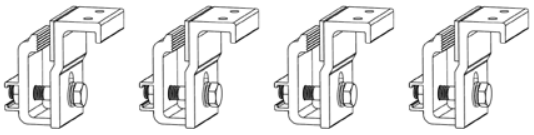
2-H	Foam Seal Tape	1	
2-I	Allen Wrench	1	
2-J	#17 Wrench	1	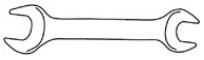
1-M	Safety Buckle Connector Nissan/Toyota/Jeep Trucks (Utility Track Channel) **ONLY**	2	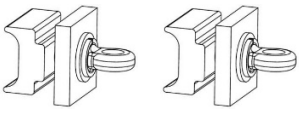

Installation Instructions

1. Check contents of carton with the list above before beginning installation
2. If the front of the bed is lower than the side rails, stick the supplied foam seal tape on the front edge of the bed.

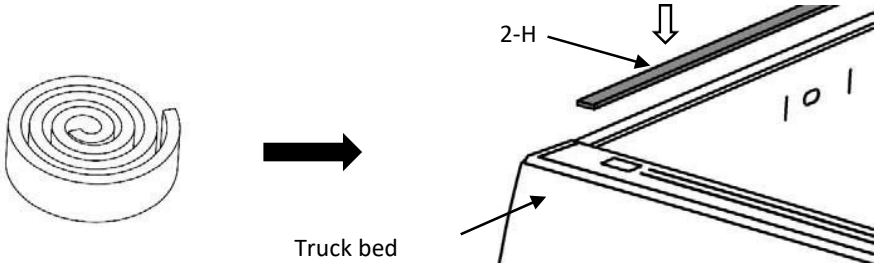

3. Slide the Front Support Plate (1-F) into the side rails (from front end), and move the Front Support Plate (1-F) to front of side rail.

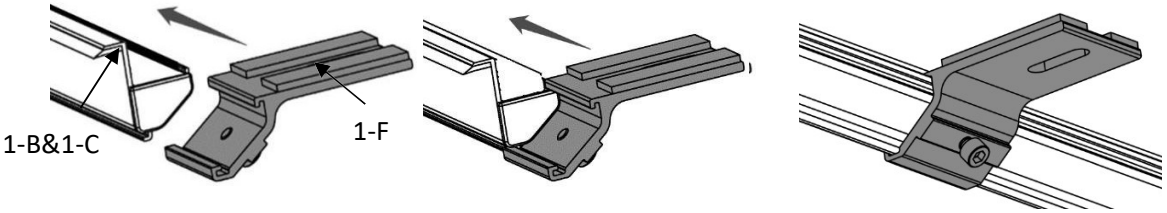

4. Insert the drain tubes(1-E) into the front of side rails.

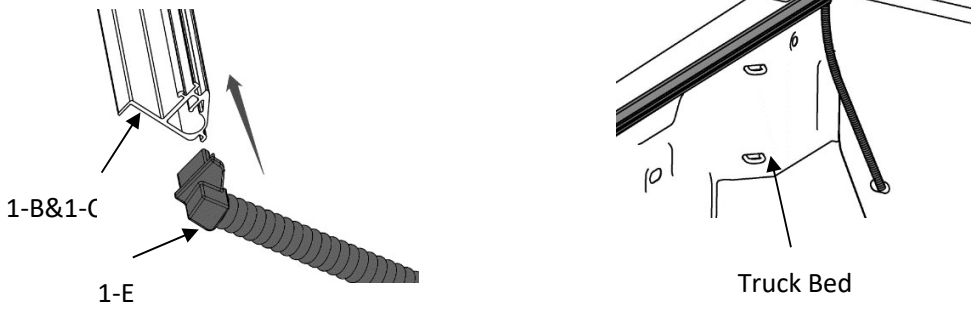

5. Unscrew and remove the aluminum block from the side rail. Insert the block into the truck bed Factory Track.

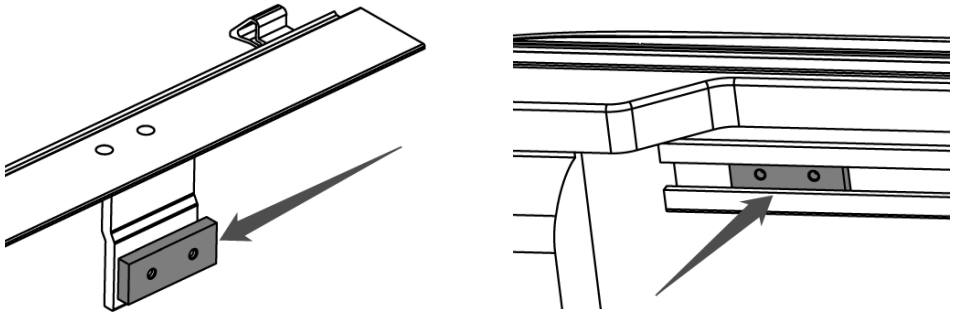

6. Place the side rail on the bed rail, and push it to the front wall of truck bed. Then bolt the side rail with the aluminum block (already in the Factory Track in Step 5) together. Tighten the clamps each side.

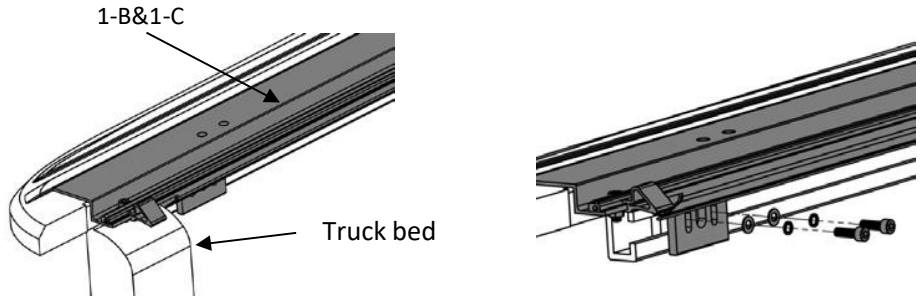

7. Place the bed cover on the front end of truck bed. Ensure the cover is even on all sides and sit firmly on side rails.

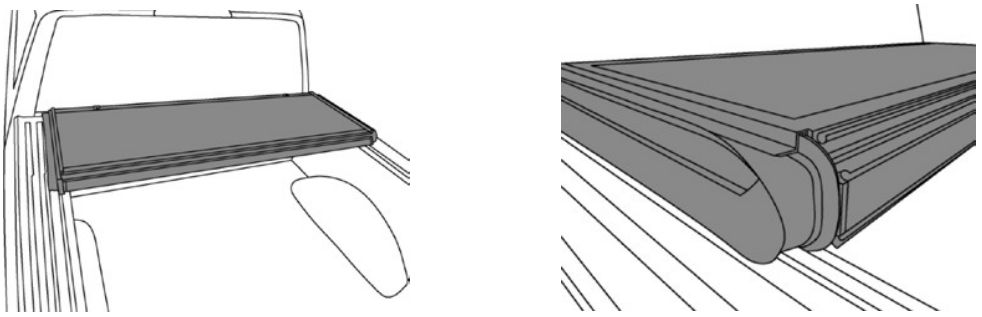

8. Adjust the front support plate(1-F) to correct position, insert the front bolt with rubber washer into the holes on the cover front panel and front support plate. Then tighten the hand nut under the front support plate.



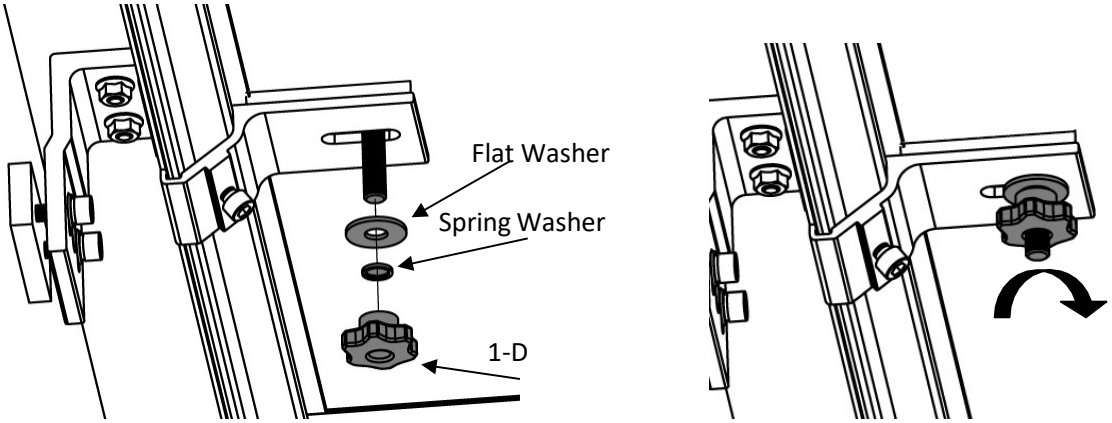

※ATTENTION: Make sure the Flat Washer and Spring Washer are all placed on bolt before screw the plastic nut on.

9. Unfold the cover, ensure the panel latch engages with the rail retainer latch on the side rails. If necessary, adjust the rail latch to match the panel latch position. Tighten the side rail retainer latch. Lock the cover and close the tailgate.

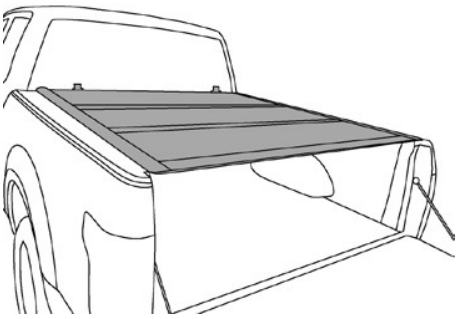

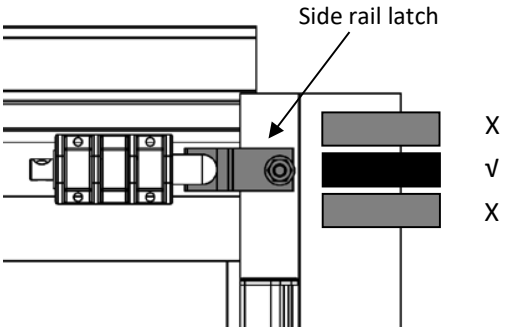

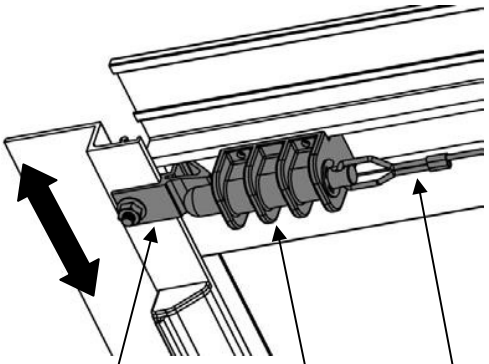

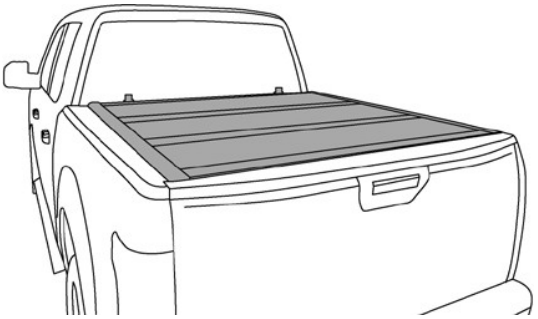

Side rail latch Panel Latch Lock Cable

ATTENTION: TIGHTEN ALL BOLTS & NUTS BEFORE DRIVING!

For Trucks without Factory Track System:

Step 4 and 5 above are changed to the following steps:

Step-1 Remove the Clamp Assembly from the Side Rail (1-B&1-C).

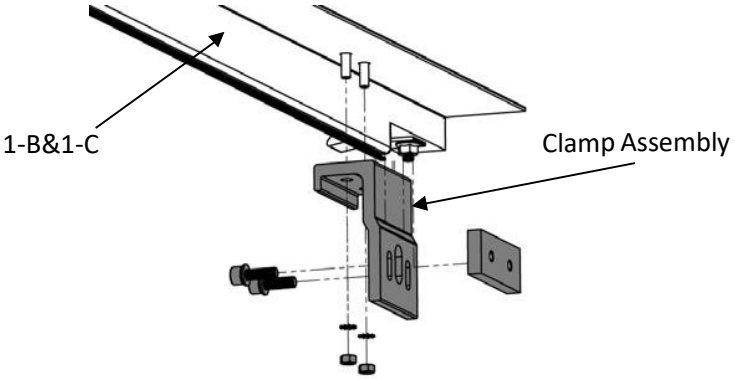

Step-2 Attach and Install the other set of Clamp Assembly (2-G) to the Side Rail (1-B&1-C), then tighten the nuts.

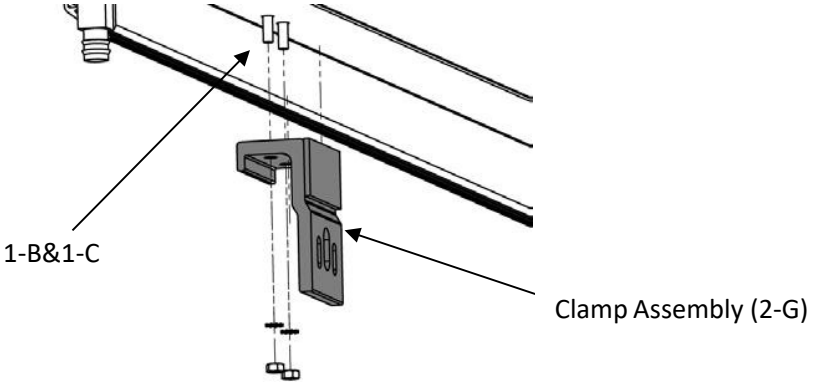

Step-3 Place the side rail on the bed rail, and push it to the front wall of truck bed. Place one clamp at the front of the side rail and one at the rear (please make sure the rear clamps is placed on the position that is closest to tailgate). Tighten the clamps each side.

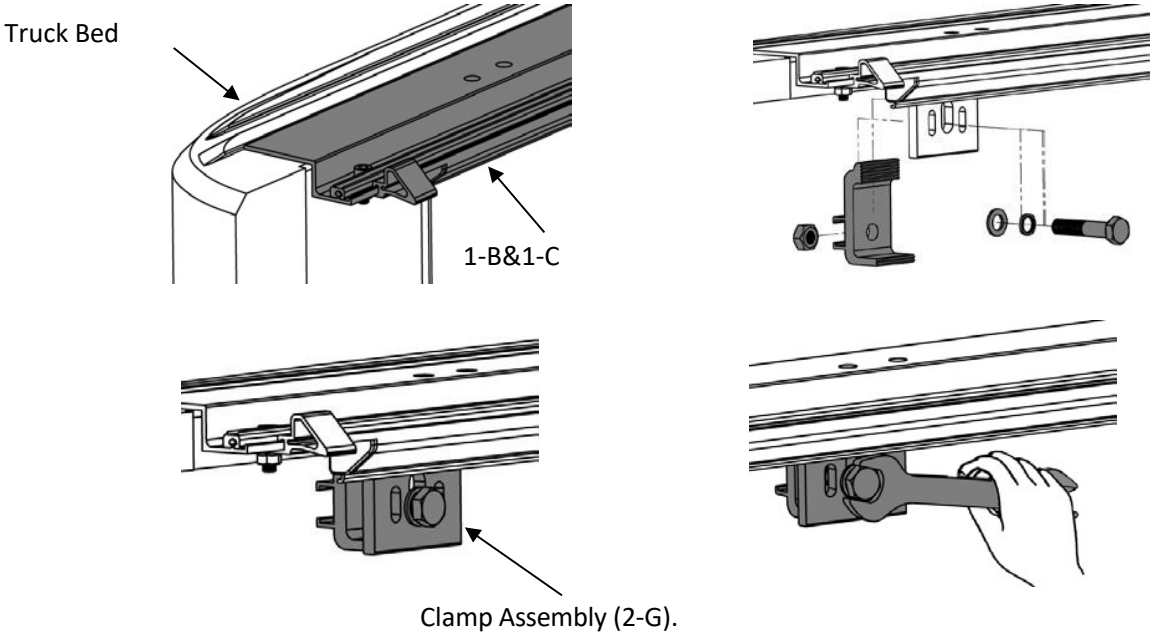

Safety Buckles Instructions option-1

For Truck bed without Utility Track System, when you open the cover, there are two safety buckles on each side of the cover front panel.

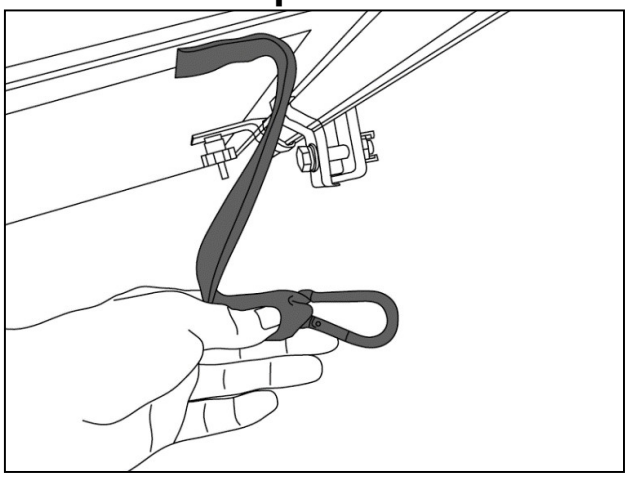

When installing the side rail, make sure one side rail clamp (2-G) is installed nearby the Strap Safety Buckle position.

There is a hole on the bottom of the clamp. Snap the safety buckle into the hole of the clamp.

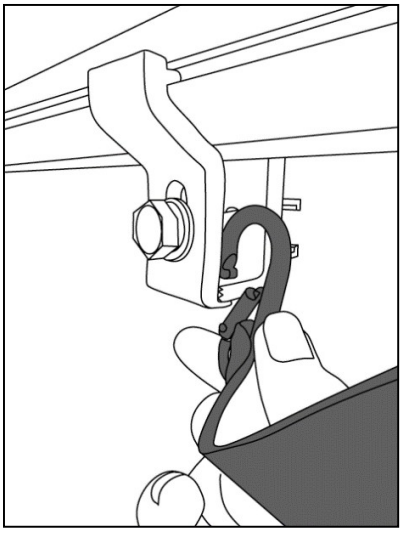

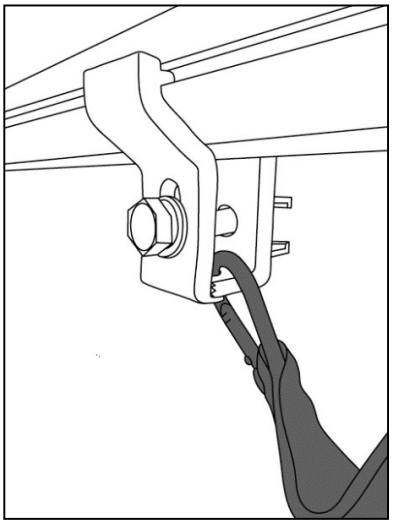

WARNING:

Always secure the safety straps to the truck bed. Never drive with a cover in partially opened position.

Safety Buckles Instructions option-2

For Truck bed with Utility Track System, two Safety Buckles Connectors are included(1-M).

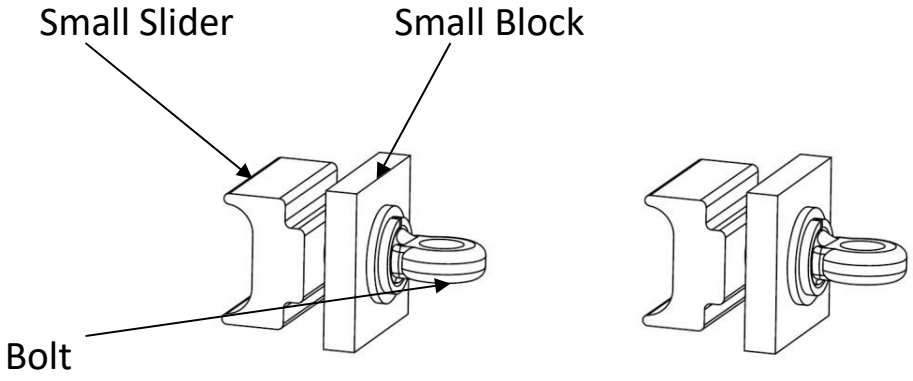

Insert the small slider into the Track Channel. Tighten the bolt. (Note: Make sure the small slider is installed nearby the Strap Safety Buckle position) There is a hole on the bottom of the bolt. Snap the safety buckle into the hole of the bolt.

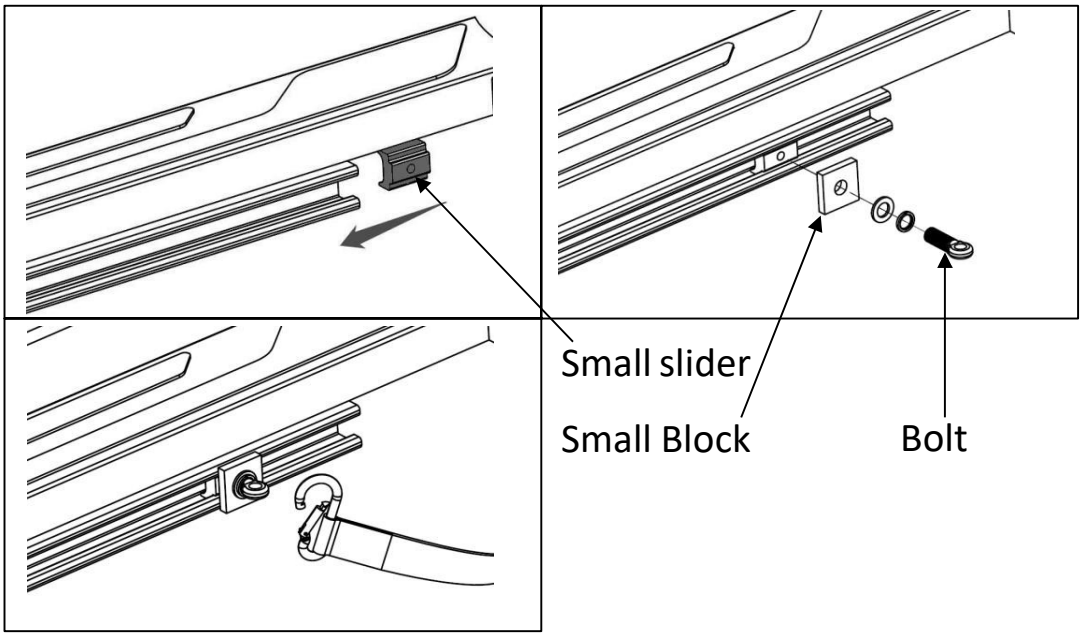

WARNING:

Always secure the safety straps to the truck bed. Never drive with a cover in partially opened position.

CLEANING

Clean with a mild soap and water. Do not expose to any type of fuel including gasoline, diesel or oils and chemicals of any nature.

⚠ WARNINGS

READ AND UNDERSTAND ALL INSTRUCTIONS. FAILURE TO FOLLOW ALL INSTRUCTIONS LISTED, FAIL TO READ MAY RESULT SERIOUS INJURY.

• DO NOT CUT OR MODIFY THE TONNEAU COVER OR MOUNTING ACCESSORIES.

• DO NOT EXCEED THE VEHICLE MANUFACTURER'S WEIGHT LIMITS.

• DO NOT USE DAMAGED OR EXCESSIVELY WORN PRODUCTS. CONTACT US IF YOU ARE UNSURE.

• THE WARNINGS, CAUTIONS, AND INSTRUCTIONS DISCUSSED IN THIS INSTRUCTION MANUAL CANNOT COVER ALL POSSIBLE CONDITIONS OR SITUATIONS THAT COULD OCCUR. DISCRETION AS TO PROPER USE IS DEPENDANT ON THE USER AND ALL PRECAUTIONS MUST BE TAKEN TO PROPERLY CARE FOR THE BED COVER.

INSTALLATION PRECAUTIONS

- Follow DOT regulations regarding installation and use.
- Park truck on a flat, level, hard surface well away from traffic. Place transmission in park.
- Verify that installation surface has no hidden wires before installing clamps and fasteners.
- Install only according to these instructions. Improper installation can create hazards.
- Wear ANSI-approved safety goggles and heavy-duty work gloves during assembly and installation.
- Keep installation area clean and well lit.
- Do not install when fatigued or under the influence of drugs or medication.
- Weight capacity and other product capabilities apply to properly and completely installed product only.

USE PRECAUTIONS

- Do not exceed rated weight capacity of Tonneau Cover.
- Do not exceed rated weight capacity of truck. Refer to truck's Gross Vehicle Weight Rating.
- Use as intended only.
- Inspect before every use; do not use if parts loose or damaged.
- This product is not a toy. Do not allow children to play with or near this item.
- Maintain product labels and nameplates. These carry important safety information.
- The warnings, precautions, and instructions discussed in this instruction manual cannot cover all possible conditions and situations that may occur. It must be understood by the operator that common sense and caution are factors which cannot be built into this product, but must be supplied by the operator.

Warranty

Terms of Warranty

The structure of your cover is warranted to be structurally free from defects in material and workmanship for (3) three years from the retail date of purchase. The hinges, seals, and hardware are warranted to be free from defects in material and workmanship for (3) three years from the retail date of purchase. This warranty applies only to the original purchaser and is nontransferable. Your original sales receipt will serve as proof of purchase for this warranty. Before credit can be issued on a warranty claim, proof of defect may be required. This can be determined at the time of the claim.

Exclusions of Warranty

Not covered under this warranty is failure due to neglect, proper installation including any modifications to installation hardware, alterations, addition of equipment, abuse, accident, weather related damage, exposure to chemicals that are labeled "safe for rubber" and normal wear from lack of maintenance.