TRAIL FORTRESS

BUILT FOR THE TRAIL. CHECKED FOR YOUR TRUCK.

Rough Country 47318650B Installation Instructions

Hard Low-Profile Tri-Fold Tonneau Cover

Part number: 47318650B

trailfortress.com/rough-country-hard-low-profile-bed-cover-47318650b

Scan for fitment, price and install help

ROUGH COUNTRY

Tri-Fold Flush Mount Hard Cover

Parts included in the Cover Assembly:

Item	Description	Qty	Pic
1-A	Tonneau Cover	1	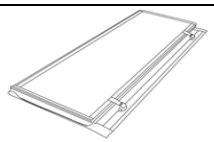
1-B	Left Side Rail **(Including Middle Locking Latch)**	1	
1-C	Right Side Rail **(Including Middle Locking Latch)**	1	
1-D	Front Bolt	2	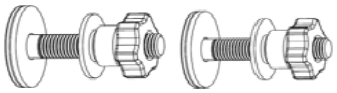
1-E	Drain Tube	2	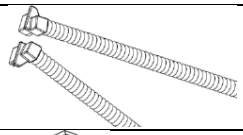
1-F	Front Support Plate (Including Bolts)	2	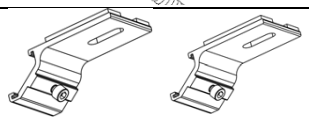
1-G	Side Rail Locking Latch (including Bolts)	2	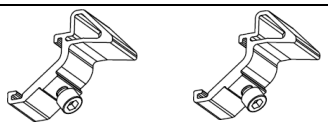
1-H	Clamp Assembly (Clamps A)	4	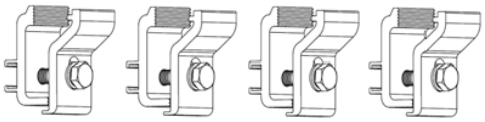
*1-K	Clamp Assembly (Clamps B) Nissan/Toyota/Jeep Trucks (Utility Track Channel) **ONLY**	4	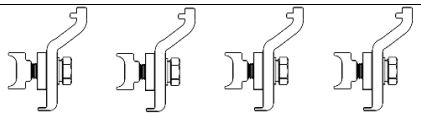
1-I	Rubber Strip	1	
1-J	Foam Seal Tape	1	
*1-M	Safety Buckle Connector Nissan/Toyota/Jeep Trucks (Utility Track Channel) **ONLY**	2	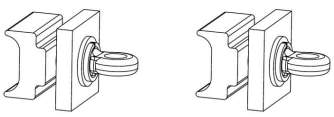

Accessories: Allen Wrench 1pc, #17 Wrench 1pc
NOTE: If your Truck Bed is 6.5 ft bed, you will receive 6 clamps (Clamps A orClamps B).

Step1

Check Contents of carton with the list above. Clean truck bed and bed rails thoroughly before installation.

Step2

2-1 Slide the Front Support Plate (1-F) into the side rails (from front end), and move the Front Support Plate (1-F) to front part of side rail.

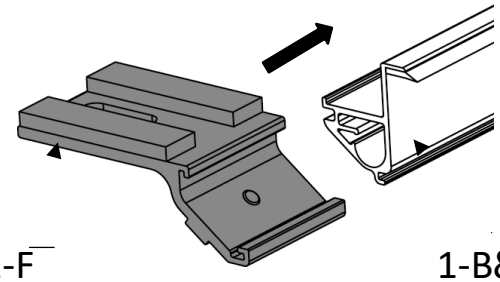

1-F

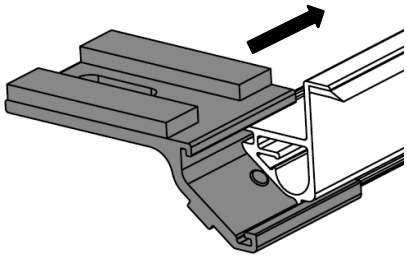

1-B&1-C

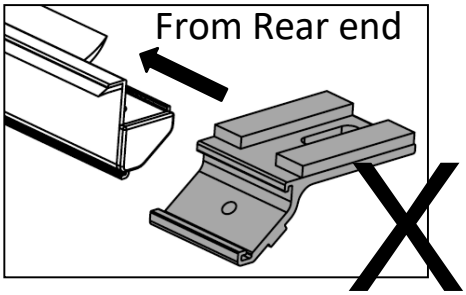

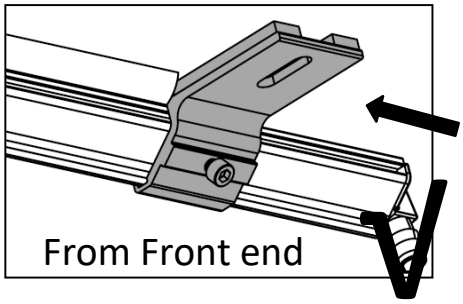

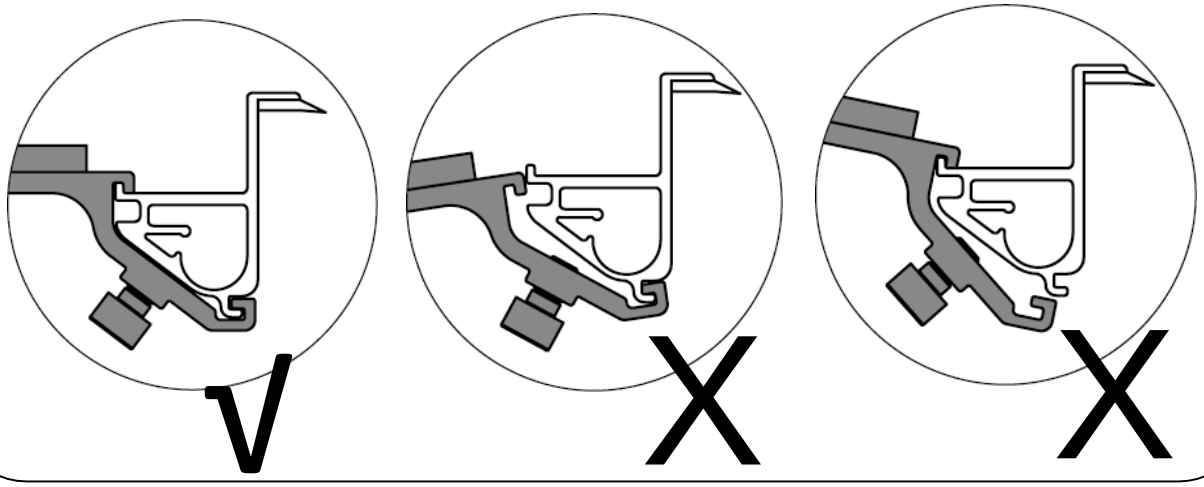

trailfortress.com/rough-country-hard-low-profile-bed-cover-47318650b

2-2 Slide the Side Rail Locking Latch (1-G) into side rail (from rear end) and move it to the rear part of side rail. Do not tighten the bolts.

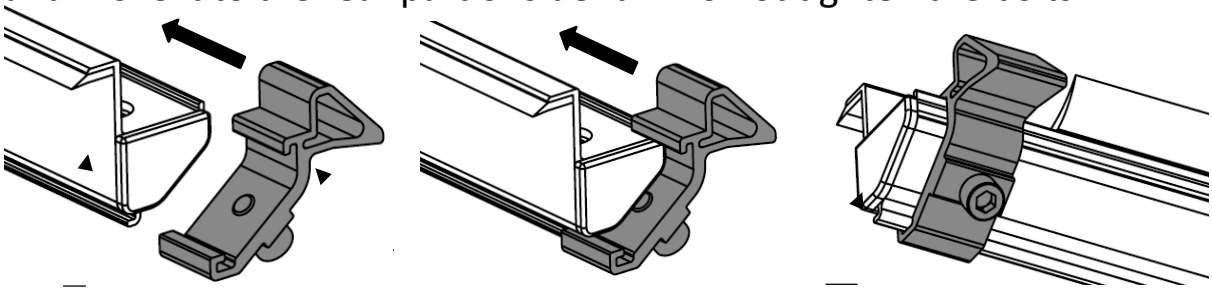

1-B&1-C

1-G

Rear end

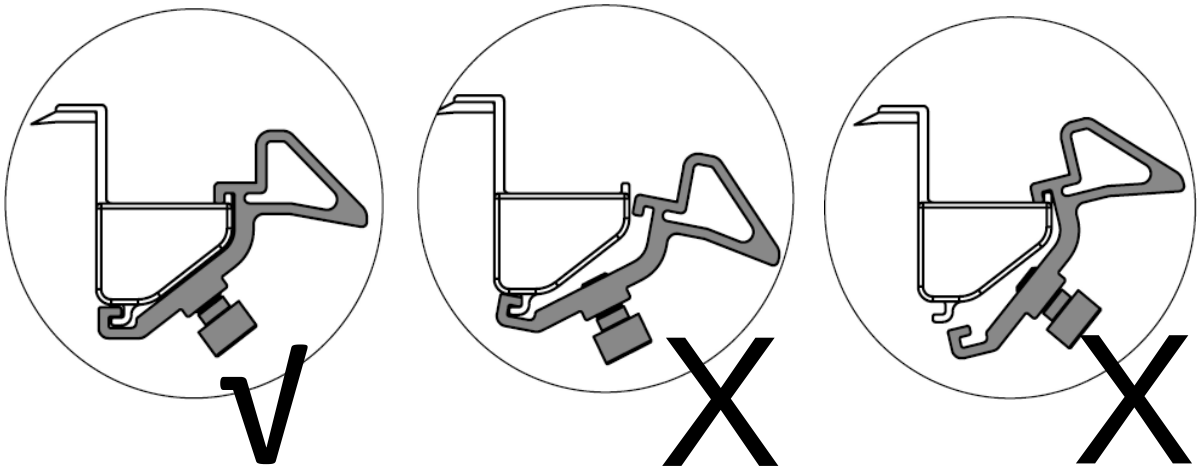

2-3 Insert the drain tubes (1-E) into the front of side rails.

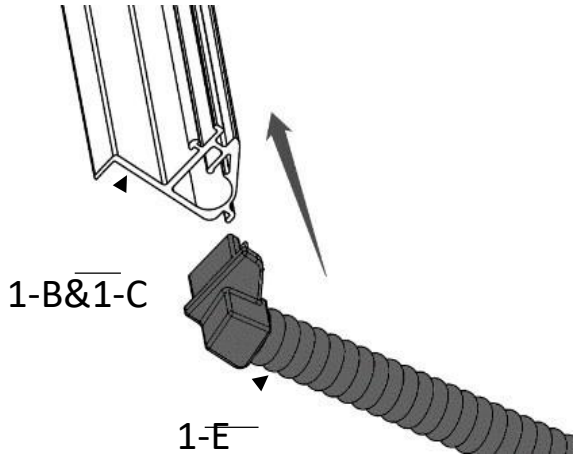

1-B&1-C

1-E

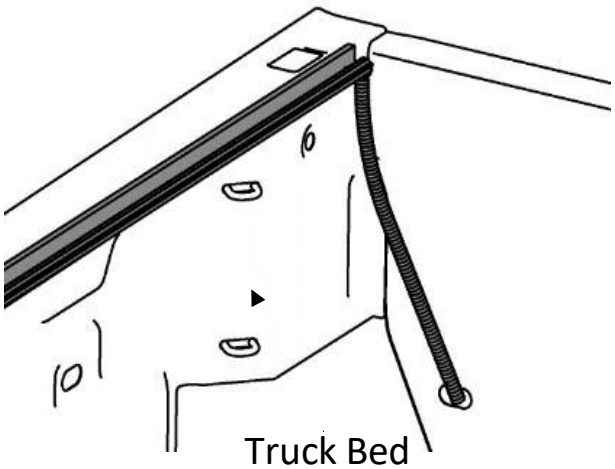

Truck Bed

trailfortress.com/rough-country-hard-low-profile-bed-cover-47318650b

Step3

Cut the Rubber strip into six (or more) pieces. Some truck bed edges are not flat, so you need to stick the rubber strips on the side rail's upper or lower edges.

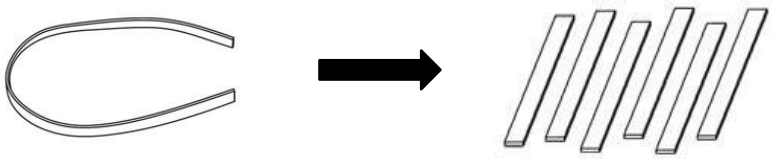

1-I

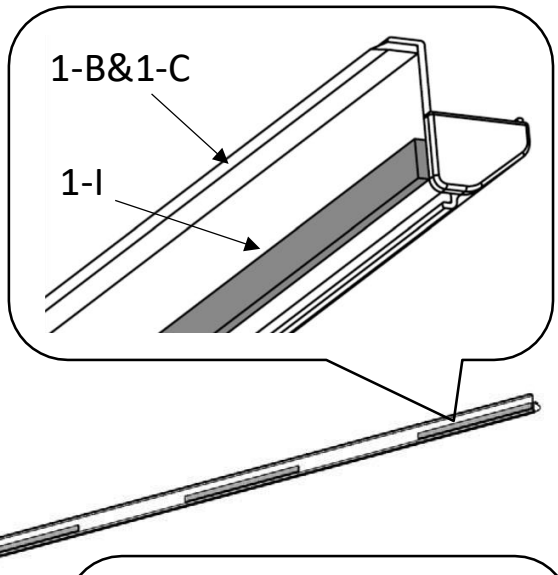

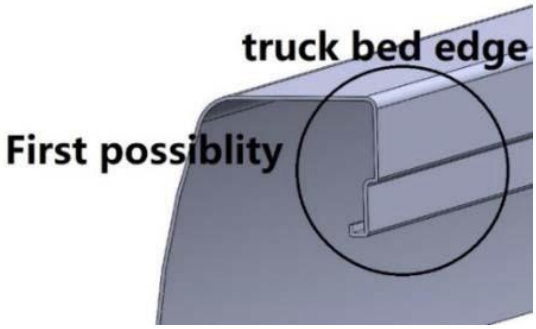

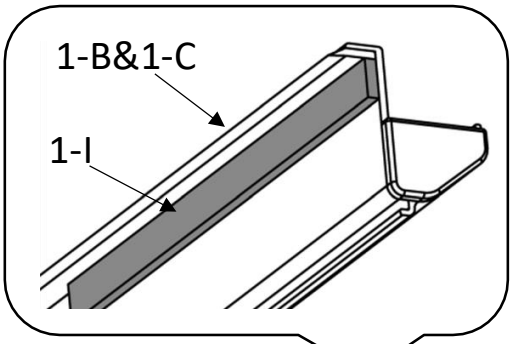

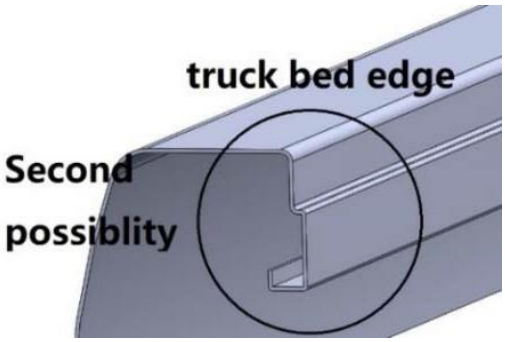

trailfortress.com/rough-country-hard-low-profile-bed-cover-47318650b

Step4

Place the side rail on the bed rail, and push it to the front wall of truck bed. Place one clamp (1-H) at the front of the side rail and one at the rear (please make sure the rear clamps is placed on the position that is closest to tailgate). Tighten the clamps each side. *For 6.5’ beds, an additional clamp will be used at the middle of side rail.

***For truck with Utility Track System, please read page 10/14 for side rail installation.**

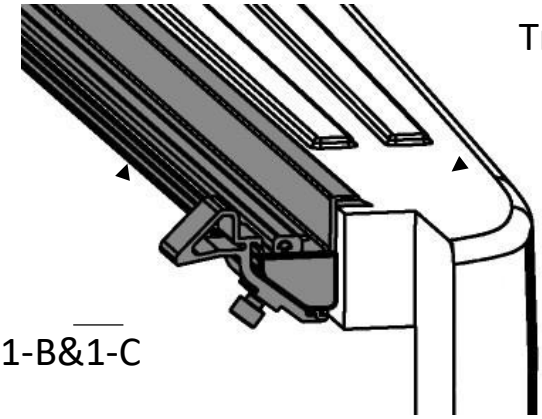

1-B&1-C

Truck Bed

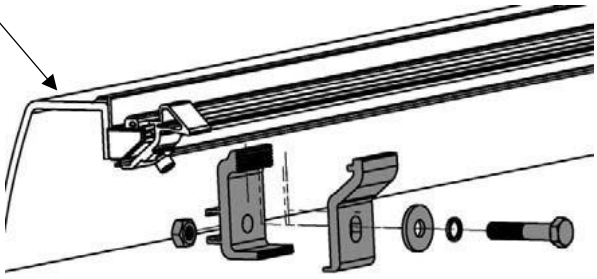

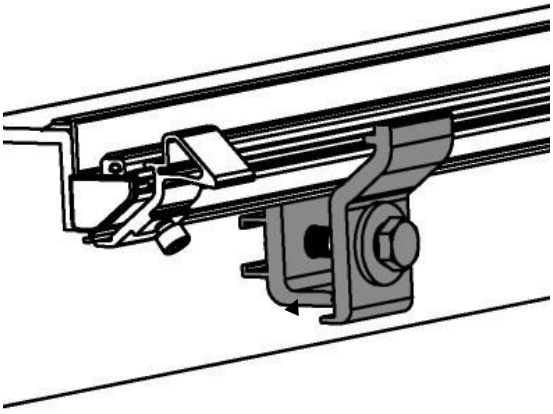

1-H

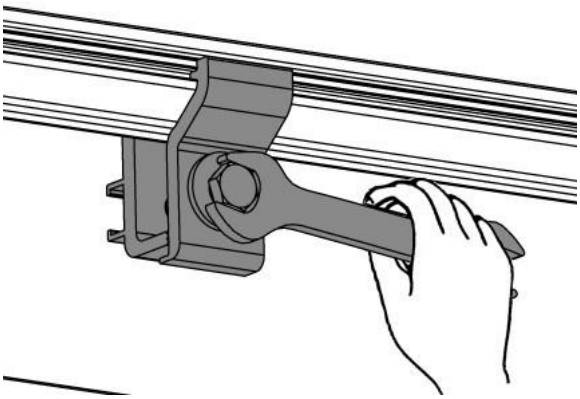

trailfortress.com/rough-country-hard-low-profile-bed-cover-47318650b

Step5

If the truck bed side rails are higher than the front edge of the bed, stick the foam seal tape on the front edge of the bed.

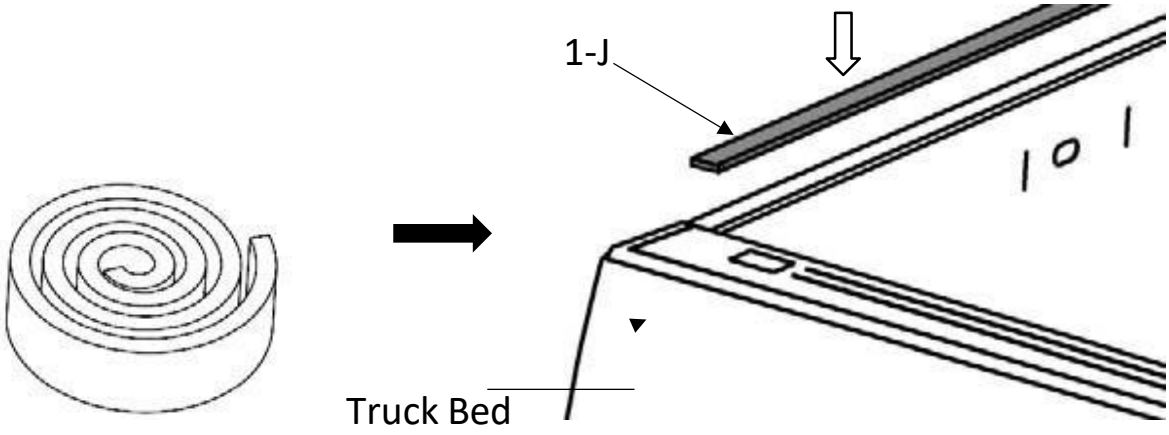

Step6

Place the tonneau cover over on the front end of truck bed. Ensure the cover is even on all sides and sit firmly on side rails.

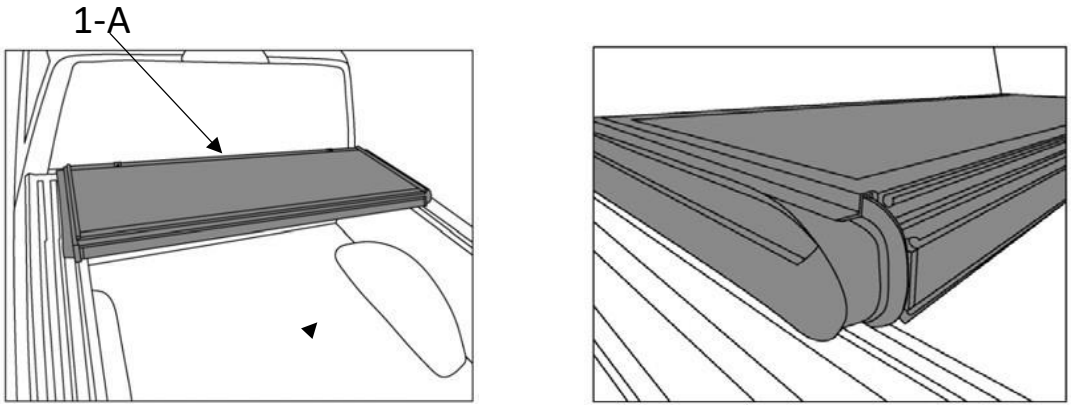

trailfortress.com/rough-country-hard-low-profile-bed-cover-47318650b

Step7

Adjust the front support plate(1-F) to correct position, insert the front bolt into the holes on the cover front panel and front support plate. Then tighten the plastic nut under the front support plate.

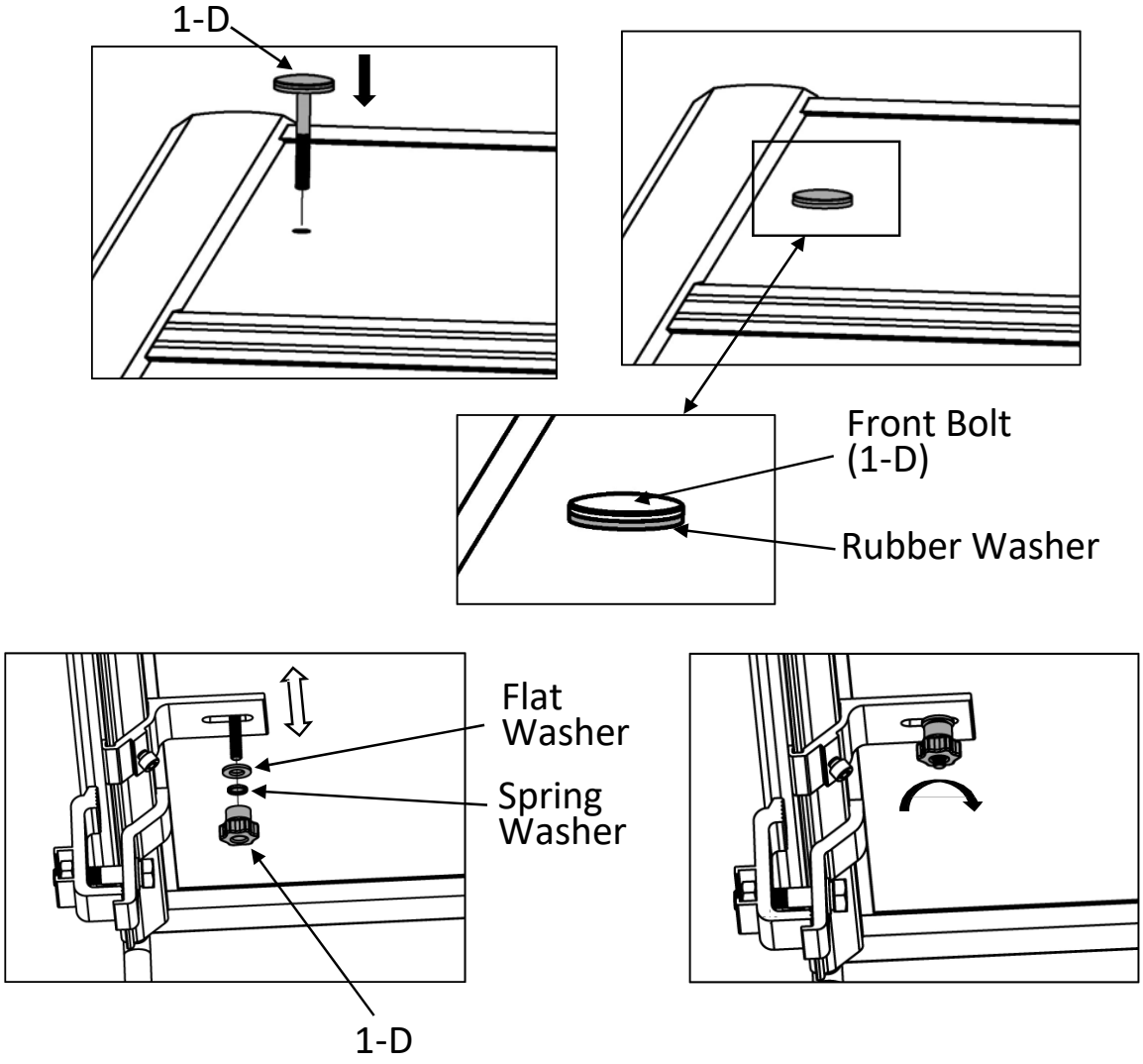

***ATTENTION*: Make sure the Flat Washer and Spring Washer are all placed on bolt before screw the plastic nut on.**

trailfortress.com/rough-country-hard-low-profile-bed-cover-47318650b

Step8

Unfold the cover one plate, ensure the cover middle release touches the middle locking latch. If necessary, adjust the Middle Locking Latch to match the release position. Tighten the Middle locking latches.

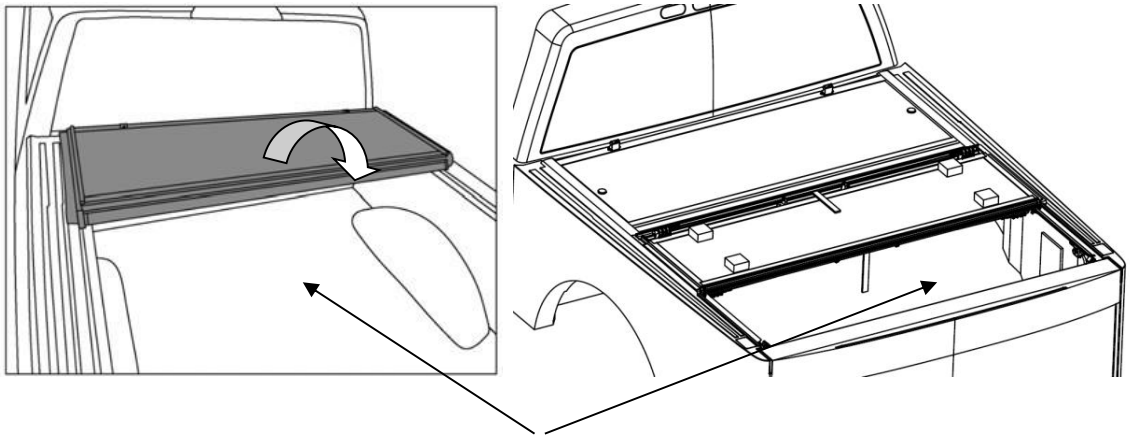

Truck Bed

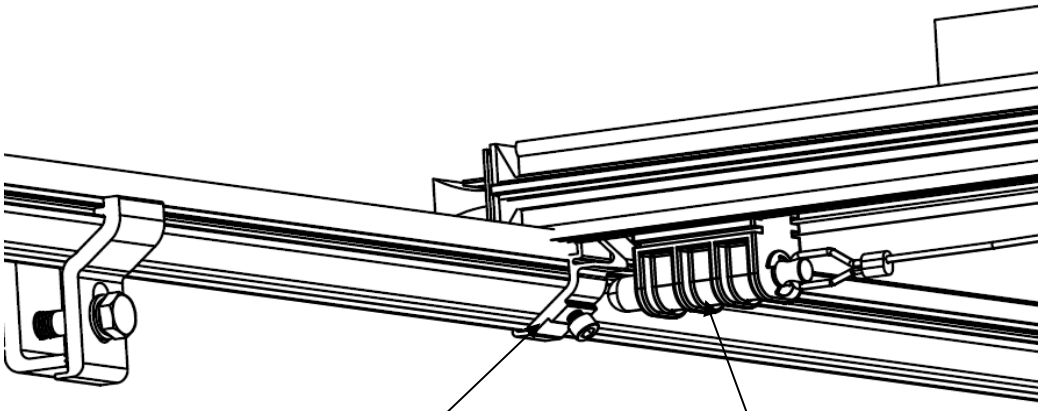

Middle Locking Latch

Middle Release

trailfortress.com/rough-country-hard-low-profile-bed-cover-47318650b

Step9

Unfold the cover, ensure the cover release touches the side rail locking latch(1-G). If necessary, adjust the Locking latch(1-G) to match the release position. Tighten the side rail locking latches. Lock the cover and close the tailgate.

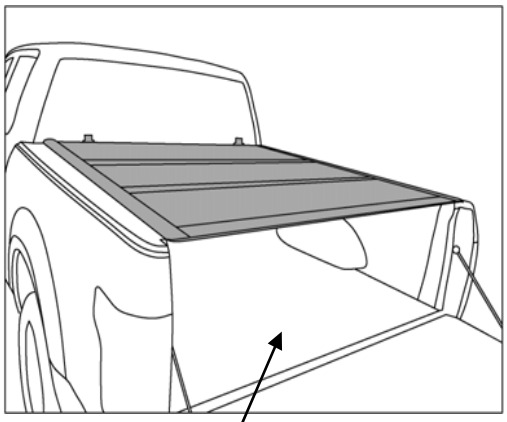

Truck Bed

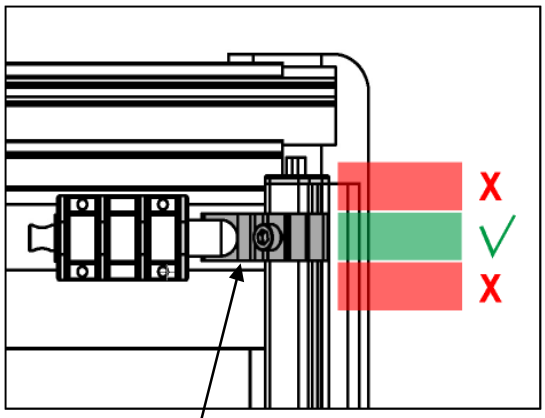

1-G

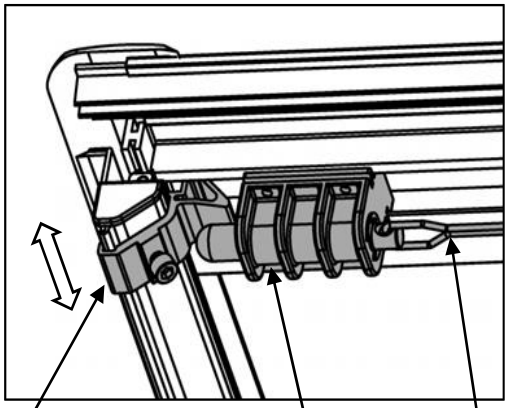

Locking Latch (1-G)

Release

Lock Cable

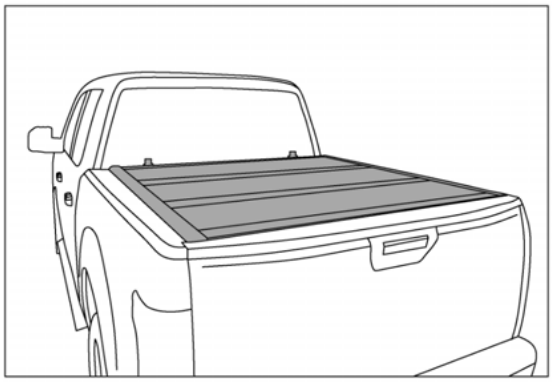

BE ATTENTION: TIGHTEN ALL BOLTS & NUTS BEFORE DRIVING!

trailfortress.com/rough-country-hard-low-profile-bed-cover-47318650b

When you open the box, you will see the below clamps.

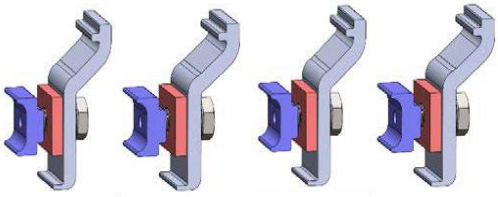

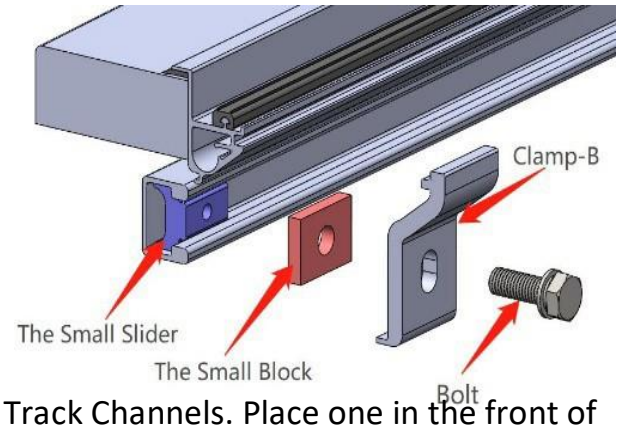

Step-1. Insert the small sliders into the Track Channels. Place one in the front of channel and the other one in the rear of the channel. *For 6.5’ bed, an additional slider will install in the middle of channel.

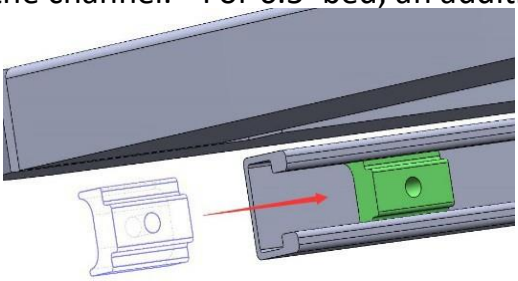

Step-2. Secure the side rail and truck bed with the clamps (Bolt the Clamp-B, the small Block and the Small Slider together). Place one clamp at the front of the side rail and one at the most rear position. Tighten the clamps each side. Then follow the main Installation. *For 6.5’ beds, an additional slider will be installed in the middle of side rail.

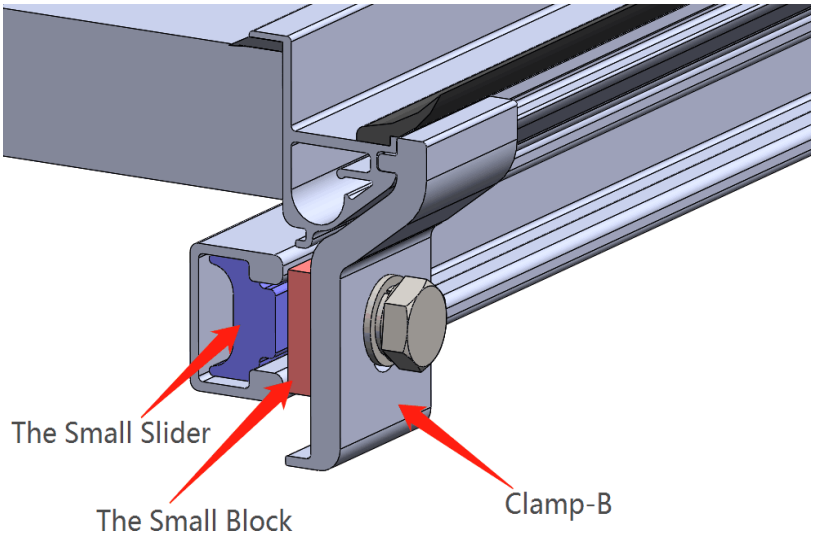

trailfortress.com/rough-country-hard-low-profile-bed-cover-47318650b

For Truck bed without Utility Track System, when you open the cover, there are two safety buckles on each side of the cover front panel.

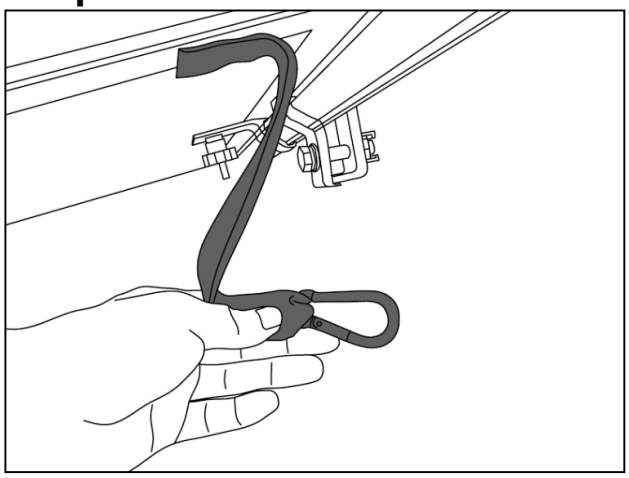

When installing the side rail, make sure one side rail clamp (1-H) isinstalled nearby the Strap Safety Buckle position. There is a hole on the bottom of the clamp. Snap the safety buckle into the hole of the clamp.

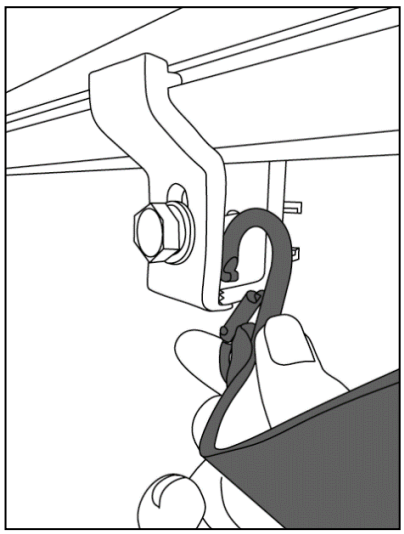

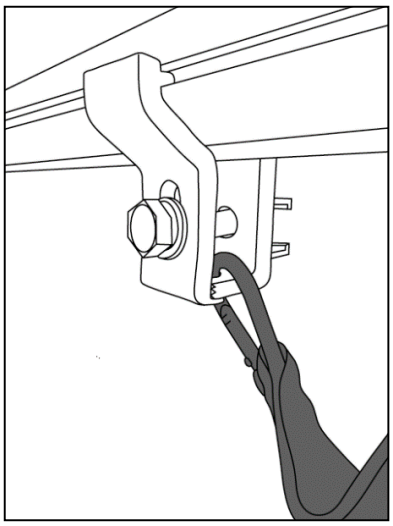

WARNING:

Always secure the safety straps to the truck bed. Never drive with a cover in partially opened position.

trailfortress.com/rough-country-hard-low-profile-bed-cover-47318650b

Safety Buckles Instructions option-2

For Truck bed with Utility Track System, Safety Buckles Connectors are included(1-M).

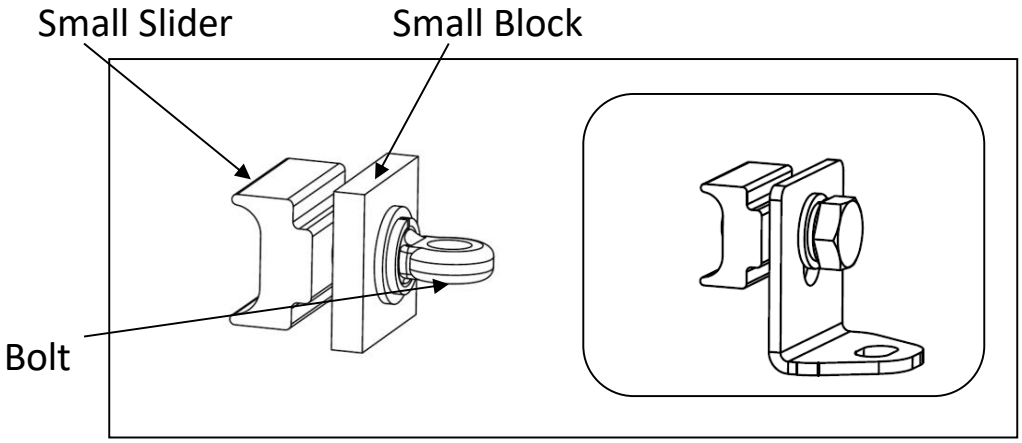

Insert the small slider into the Track Channel. Tighten the bolt. (Note: Make sure the small slider is installed nearby the Strap Safety Buckle position) There is a hole on the bottom of the bolt. Snap the safety buckle into the hole of the bolt.

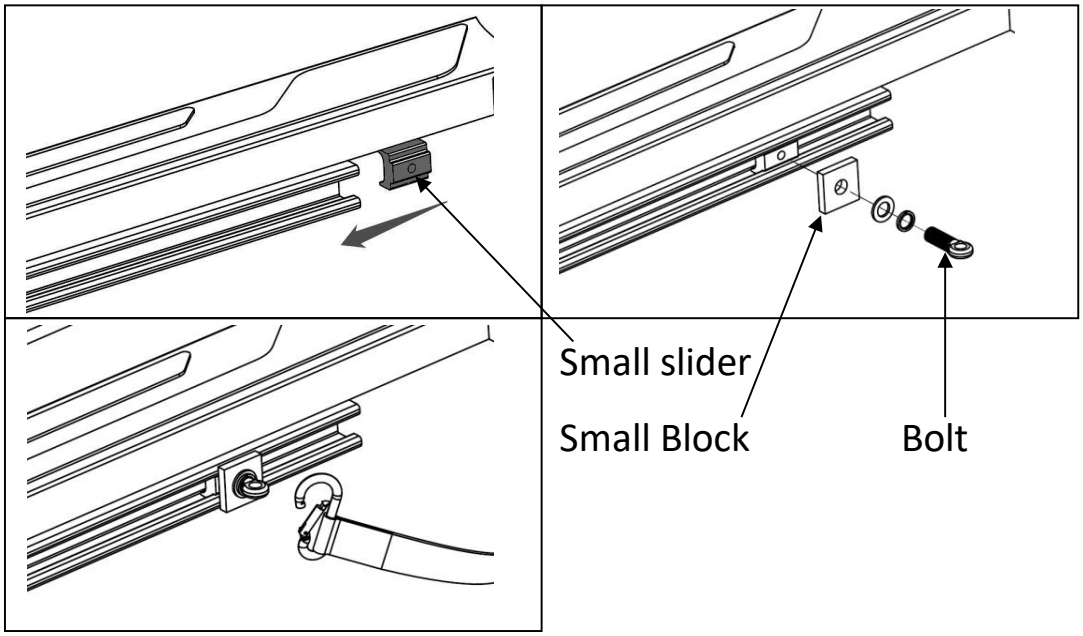

WARNING:

Always secure the safety straps to the truck bed. Never drive with a cover in partially opened position.

trailfortress.com/rough-country-hard-low-profile-bed-cover-47318650b

CLEANING

Clean with a mild soap and water. Do not expose to any type of fuel including gasoline, diesel or oils and chemicals of any nature.

⚠ WARNINGS

READ AND UNDERSTAND ALL INSTRUCTIONS. FAILURE TO FOLLOW ALL INSTRUCTIONS LISTED, FAIL TO READ MAY RESULT SERIOUS INJURY.

• DO NOT CUT OR MODIFY THE TONNEAU COVER OR MOUNTING ACCESSORIES.

• DO NOT EXCEED THE VEHICLE MANUFACTURER'S WEIGHT LIMITS.

• DO NOT USE DAMAGED OR EXCESSIVELY WORN PRODUCTS. CONTACT US IF YOU ARE UNSURE.

• THE WARNINGS, CAUTIONS, AND INSTRUCTIONS DISCUSSED IN THIS INSTRUCTION MANUAL CANNOT COVER ALL POSSIBLE CONDITIONS OR SITUATIONS THAT COULD OCCUR. DISCRETION AS TO PROPER USE IS DEPENDANT ON THE USER AND ALL PRECAUTIONS MUST BE TAKEN TO PROPERLY CARE FOR THE BED COVER.

INSTALLATION PRECAUTIONS

- Follow DOT regulations regarding installation and use.
- Park truck on a flat, level, hard surface well away from traffic. Place transmission in park.
- Verify that installation surface has no hidden wires before installing clamps and fasteners.
- Install only according to these instructions. Improper installation can create hazards.
- Wear ANSI-approved safety goggles and heavy-duty work gloves during assembly and installation.
- Keep installation area clean and well lit.
- Do not install when fatigued or under the influence of drugs or medication.
- Weight capacity and other product capabilities apply to properly and completely installed product only.

USE PRECAUTIONS

- Do not exceed rated weight capacity of Tonneau Cover.
- Do not exceed rated weight capacity of truck. Refer to truck's Gross Vehicle Weight Rating.
- Use as intended only.
- Inspect before every use; do not use if parts loose or damaged.
- This product is not a toy. Do not allow children to play with or near this item.
- Maintain product labels and nameplates. These carry important safety information.
- The warnings, precautions, and instructions discussed in this instruction manual cannot cover all possible conditions and situations that may occur. It must be understood by the operator that common sense and caution are factors which cannot be built into this product, but must be supplied by the operator.

Warranty

Terms of Warranty

The structure of your cover is warranted to be structurally free from defects in material and workmanship for (3) three years from the retail date of purchase. The hinges, seals, and hardware are warranted to be free from defects in material and workmanship for (3) three years from the retail date of purchase. This warranty applies only to the original purchaser and is nontransferable. Your original sales receipt will serve as proof of purchase for this warranty. Before credit can be issued on a warranty claim, proof of defect may be required. This can be determined at the time of the claim.

Exclusions of Warranty

Not covered under this warranty is failure due to neglect, proper installation including any modifications to installation hardware, alterations, addition of equipment, abuse, accident, weather related damage, exposure to chemicals that are labeled "safe for rubber" and normal wear from lack of maintenance.

trailfortress.com/rough-country-hard-low-profile-bed-cover-47318650b