Rough Country 42207650 Installation Instructions

Soft Roll-Up Tonneau Cover for Silverado/Sierra 6'7" Bed (2007-2014)

Part number: 42207650

trailfortress.com/rough-country-soft-roll-up-bed-cover-42207650

Scan for fitment, price and install help

SOFT ROLL-UP
TONNEAU COVER INSTALLATION GUIDE

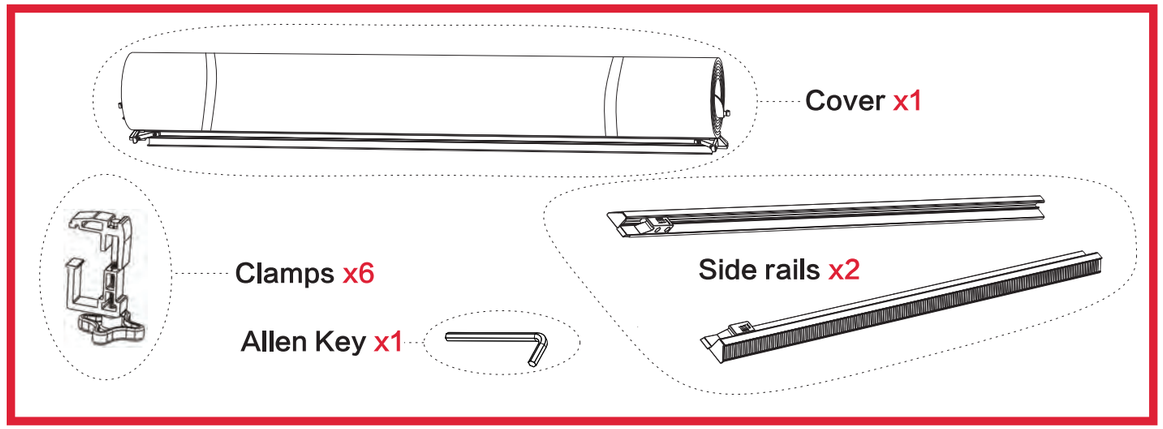

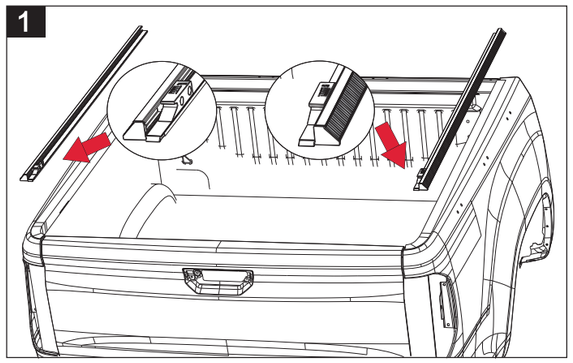

1/Positioning the Side Rails.
Place the side rails on the two truck bed sides as shown.

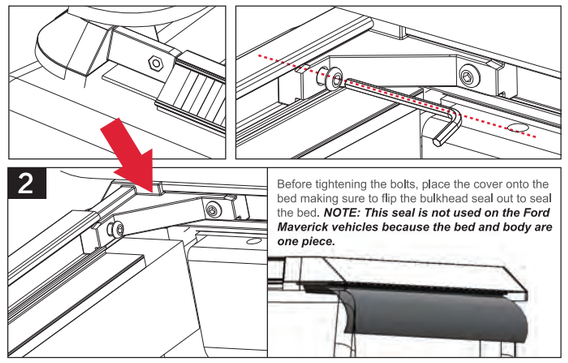

2/Installing the Cover Assembly.
Place the cover on the front of the truck bed, slide the driver's side rail into the bulkhead, then tighten the bolt as figure. Follow the same steps to install the passenger's side rail.

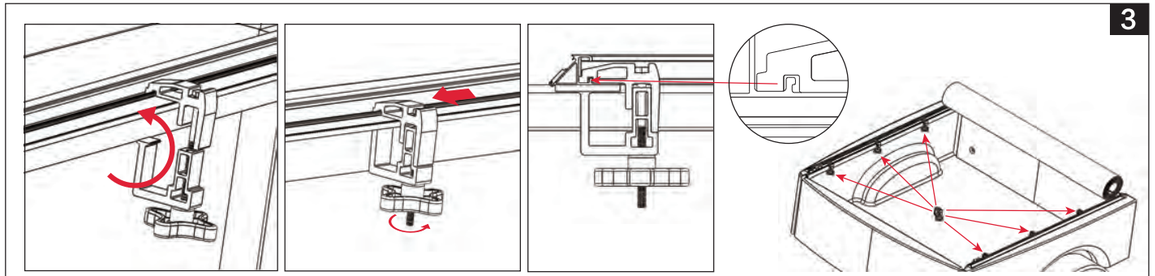

3/Installing Clamps.
Loosen the thumb screw of the clamps and fit it into the side rail mounting slot as shown in the picture. Install all six clamps on the two side rails, do not tighten clamps until all clamps are in proper position.

4/Lock and unlock cover.
After installing the clamps, roll the cover towards the tailgate, and press down to lock the cover first, then close tailgate.

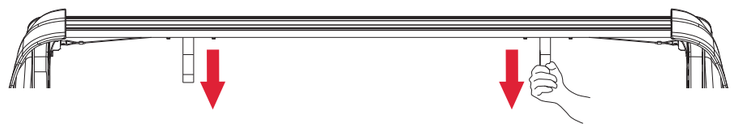

Pull down the either strap to unlock cover

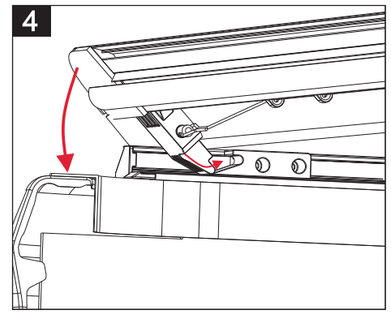

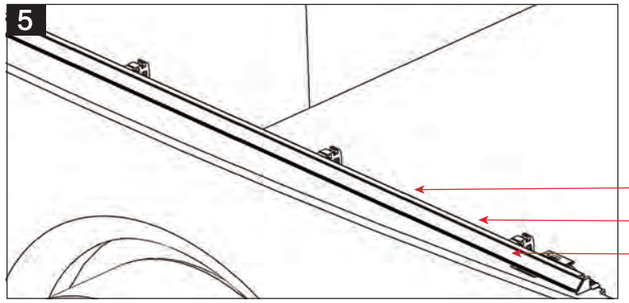

5/Secure Velcro Fastener.
Pull the cover over the velcro strip on one side of the rail, then press the edge of the cover onto the fasteners.

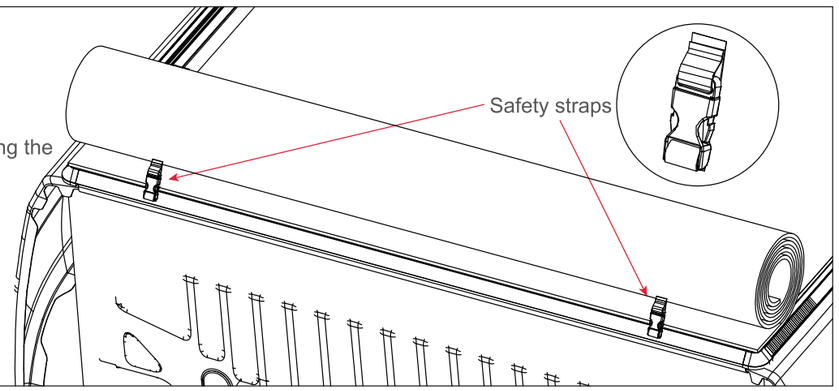

6/Open the Cover.
Roll the cover toward the cab, secure the cover open by hooking the safety straps to the front loops.

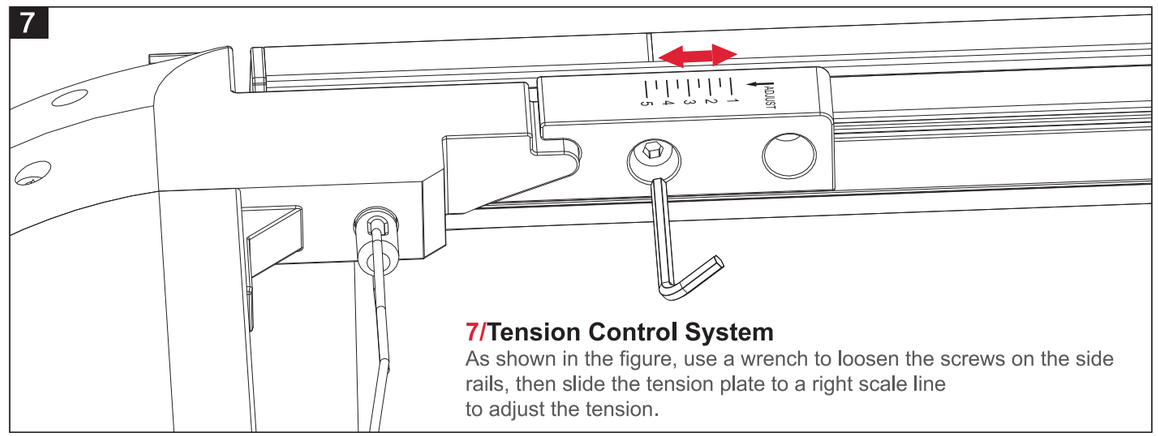

7/Tension Control System
As shown in the figure, use a wrench to loosen the screws on the side rails, then slide the tension plate to a right scale line to adjust the tension.

INSTALLATION INSTRUCTIONS of SPECIAL SERIES

Toyota All Series Nissan Series & Jeep Series (with rails)

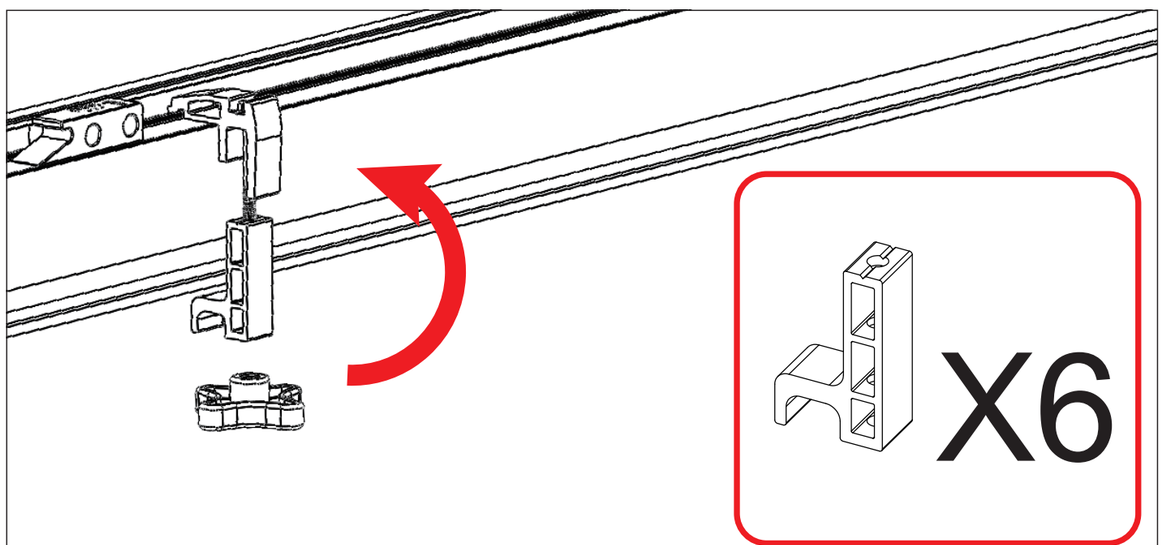

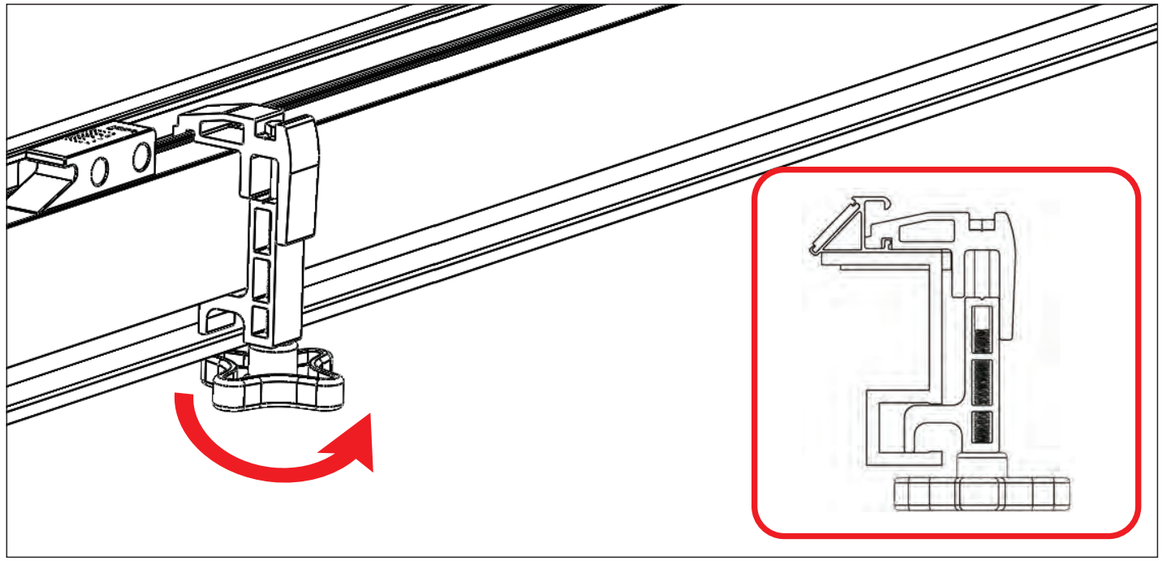

Loosen the thumb screw of the clamps and fit it into the side rail mounting slot as shown in the picture.Install all six clamps on the two side rails,do not tinghten clamps until all clamps are in proper position.

WARRANTY COVERAGE

Terms of Warranty

The structure of your cover is warranted to be structurally free from defects in material and workmanship for (2) two years from the retail date of purchase. This warranty applies only to the original purchaser and is nontransferable. Your original sales receipt will serve as proof of purchase for this warranty. Before credit can be issued on a warranty claim, proof of defect may be required. This can be determined at the time of the claim.

Exclusions of Warranty

Not covered under this warranty is failure due to neglect, improper installation including any modifications to installation hardware, alterations, addition of equipment, abuse, accident, weather related damage, exposure to chemicals that are labeled “safe for rubber” and normal wear from lack of maintenance.

Caution

Always read the ingredients of any product you are using to clean your cover. Make sure that you only use products that are safe for use with rubber. Many chemicals contain material that will permanently discolor or damage your cover hinges and seals. This is not considered a manufacturer defect.

Own Responsibilities

Incidental or consequential damage or loss of contents due to use, neglect, lack of maintenance, misuse or abuse of the cover is the sole responsibility of the truck owner and operator. Paint damage to your truck is not covered under this warranty. When operating your truck always keep the cover in either the fully closed and latched position, or properly bucked in the approved open position. The approved open position would be the first and second panels stacked on top of each other with the second panel still latched to the bed rail and both buckles snapped and pulled tight. Do not lean the cover up against the cab of the truck and do not operate truck with the cover in the temporary open position.

Repair and Replacement

In the event that your cover is found to be defective under the terms of this warranty, it is at our discretion to repair or replace the defective part. All repairs must be made under our direction and we are not responsible for any transportation costs associated with warranted claim.

Maintenance & Care

The panels of your cover require only periodic cleaning with mild car wash soap. Avoid all use of abrasive type cleaners as they may dull the finish. Some chemicals and fluids such as insect repellents, oils, solvents, and lubricants could potentially damage the rubber hinges and seals and void the warranty.

FAQ

1.How difficult is it to install the tonneau cover?
Installing of tonneau cover is easy, please follow the steps in installation manual carefully.

2.How do I clean my tonneau cover?
Wash the tonneau same as your truck. We recommend using soap and water.

3.Will the tonneau cover scratch my paint?
No. Please follow the installation instruction manual carefully to avoid scratching paint.

4.Missing or Excess Hardware?
Re-check hardware count as per the part list.

5.Why is my tonneau cover not installing properly?
Ensure year, make, model, cab length and bed size of your vehicle is listed in the application and installation steps are followed correctly.