TRAIL FORTRESS

BUILT FOR THE TRAIL. CHECKED FOR YOUR TRUCK.

Rough Country 41207550A Installation Instructions

Soft Tri-Fold Bed Cover for 5'9" Bed: Silverado/Sierra (2007–2013)

Part number: 41207550A

trailfortress.com/rough-country-soft-tri-fold-bed-cover-41207550a

Scan for fitment, price and install help

LIMITED LIFETIME WARRANTY

ROUGH COUNTRY

Contact us for service under the warranty

Phone: 1 (800) 222-7023
Email: warranty@roughcountry.com
Website: www.roughcountry.com

WARRANTY DETAILS

Rough Country warranties your product to be free from defects in material and workmanship on all aluminum framing, plastics, and hardware for a limited lifetime against manufaturer defects after date of purchase.

Rough County uses the highest quality materials in the industry. Rough Country warranties your covers tarp to be free from defects in material and workmanship for life (e.g. fading or cracking). **This does not include stitching/sewing/seaming.**

If you discover a defect in a product covered by this warranty we will, at our option, repair the product using new or refurbished components, or if repair is not possible, replace the item.

Tarp shrinkage, expansion, or broken sewing is not covered under warranty unless deemed defective.

EXCLUSIONS

This warranty covers defects in manufacturing discovered while using the product as recommended. The warranty does not cover improper service or installation, loss or theft, nor does coverage extend to damage caused by misuse, abuse, unauthorized modification, improper storage conditions, acts of God, wind or weather related damage, normal wear and tear or other causes not arising from defective materials or workmanship. The warranty does not cover parts that are subject to normal wear and tear replacement requirements. Rough Country does not warranty any tonneau covers that come off while driving, **it is the users responsibility to check clamps before driving to avoid any "Blown off covers".**

Rough Country requests a Warranty Claim Form is submitted and based on information provided will determine the legitimacy of the warranty. Upon determination, Rough Country may require the product to be returned, only authorized returns with an appropriate RGA# will be accepted as a return. Returned items do not constitute an accepted warranty. Until accepted in writing, to either the vendor or end user, Rough Country will not issue credit or replacement of products. Warranty will be issued solely at Rough Country's discretion.

IMPORTANT NOTICE

Ensure the cover is firmly fastened in either the fully closed or fully open position. Do not over tighten clamps and check clamps regularly.

Soap and water is recommended to clean the cover. Cleaning checmicals are not recommended and could harm the cover. Do not use cleaning chemicals not approved for cleaning vinyl.

Do not use silicone based cleaner or any vinyl conditioner as this will cause the vinyl to shrink.

Cargo must not be allowed to touch the cover in any position. Rough Country does not recommend placing items on top of the cover, as it may damage the cover. Protrusions in the vinyl will cause stress in the fabric and unnecessary weak spots in the material.

LIMITS OF LIABILITY

Should the product fail, your sole recourse shall be repair or replacement, as described in the preceding paragraphs. We will not be held liable to you or any other party for any damages that result from the failure of this product. Damages exclude, but are not limited to, the following: lost profits, lost savings, damage to other equipment, and incidental or consequential damages arising from the use, or inability to use this product. In no event will Rough Country be liable for more than the amount of your purchase price, not to exceed the current recommended list price of the product, and excluding tax, installation, shipping and handling charges.

The Warranty applies only to the original retail consumer. Warranty is void if the product has been removed or installed on a different vehicle than the original product was purchased. Rough Country disclaims any other warranties or guarantees, express or implied. By installing or using the product, the user accepts all terms and conditions described herein.

REQUIREMENTS

The cost of shipping or related charges to the manufacturer, or authorized repair center as well as payment of any custom clearance fees or duties are the responsibility of the user without the express written consent from Rough Country.

Certain documentation (including original purchase receipt with product description and date) and pictures may be required for warranty review of product.

INSTALLATION SHEET

ROUGH COUNTRY

SOFT VINYL, THREE PANEL COVER

Ensure all contents are in package and not damaged prior to installation. Report any damage or missing components to customer service:

BY PHONE 1 (800) 222-7023
BY EMAIL service@roughcountry.com

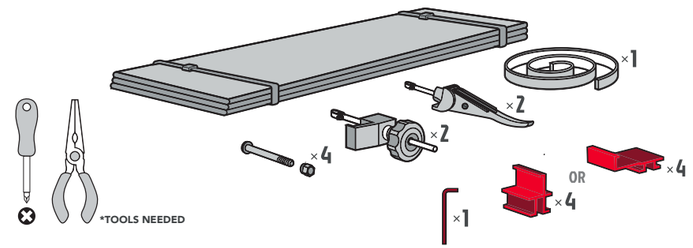

* Items in blue are for select vehicles only and are not included with every product. Only one type of bracket is included with select products.

STEP ONE

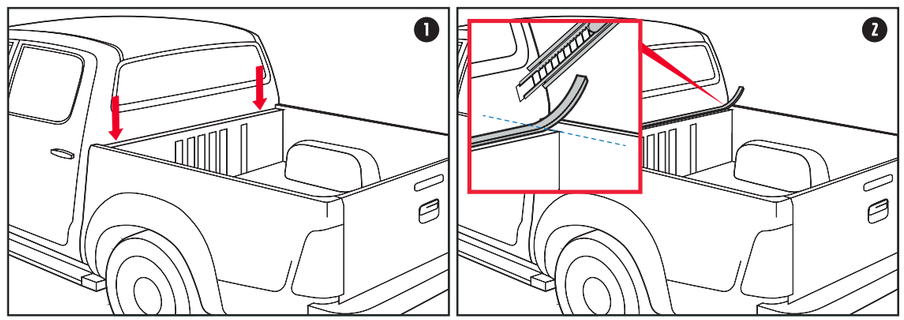

1. If the trucks front bed wall is lower then side rails, use supplied foam tape.

2. Clean & dry the area, peel adhesive backer. Install between bed rails. Cut excess.

STEP TWO

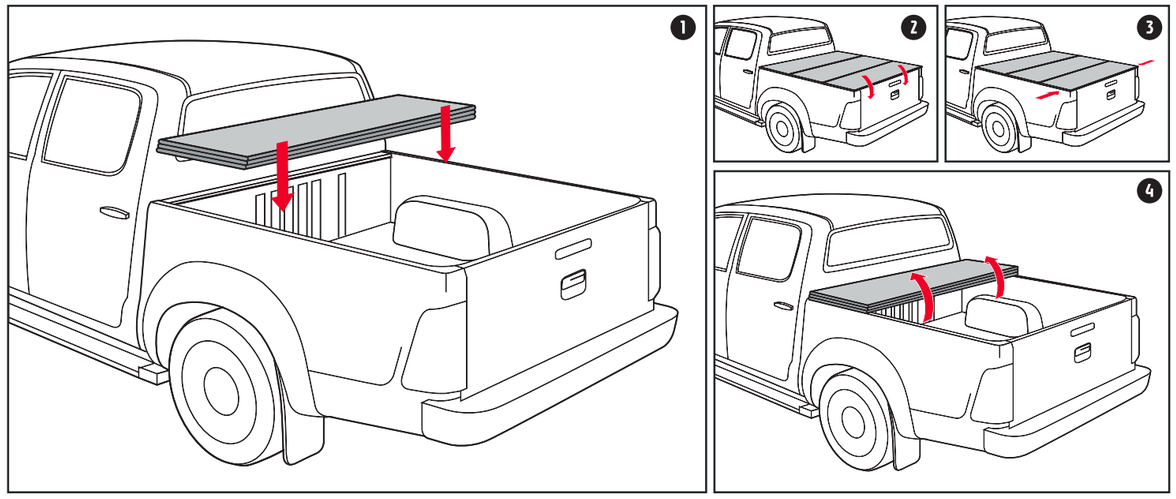

1. Place cover on bed & ensure that it is square & even on all sides. **2.** Unfold the cover. **3.** Make sure the cover is square & even at the tailgate. **4.** Completely fold up cover again.

ROUGH COUNTRY 2450 Huish Rd. Dyersburg, TN 38024 United States • T: 1-(800)-222-7023 • service@roughcountry.com

trailfortress.com/rough-country-soft-tri-fold-bed-cover-41207550a

STEP THREE

1. If your truck has a bed cap or bedliner that covers the metal bed flange, you will need to remove enough so that all the clamps make solid contact.

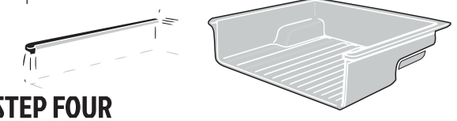

2. Trim only enough of the bed cap edge or liner wall so clamp contacts bottom of metal flange.

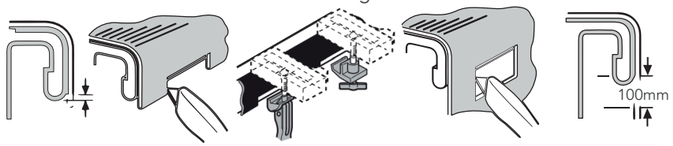

STEP FOUR

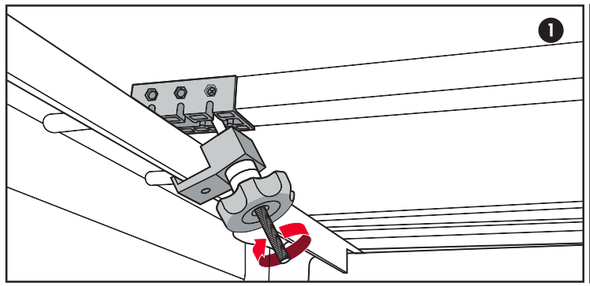

1. Place front clamp jaw under bed rail lip and tighten until snug. Repeat on both sides of the cover. Check tightness frequently.

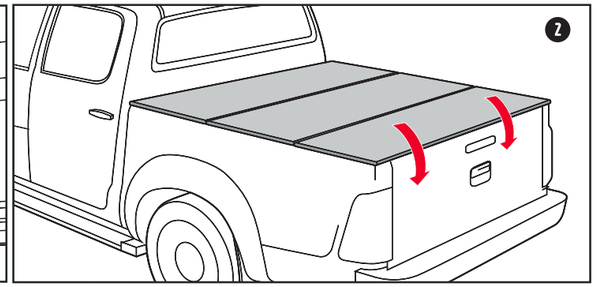

2. Completely unfold the cover.

STEP FIVE

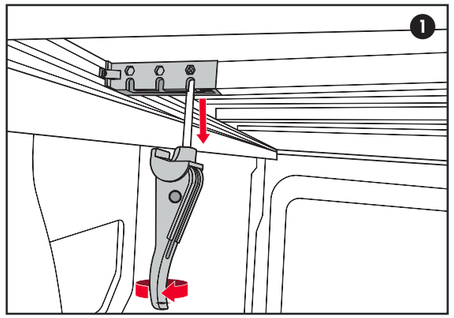

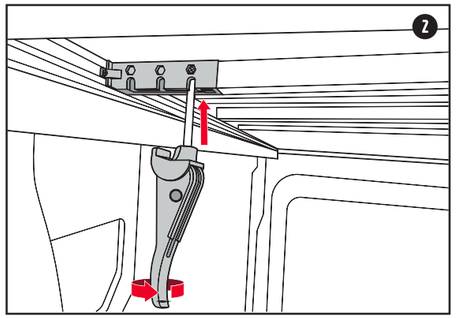

1. Rotate the latch to increase tension.

2. Rotate the latch in the opposite direction to decrease tension.

NOTE: Clamp should only be snug when engaging, do not over tighten.

STEP SIX

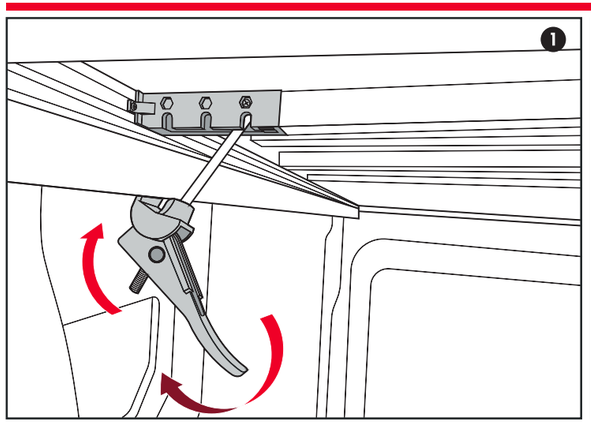

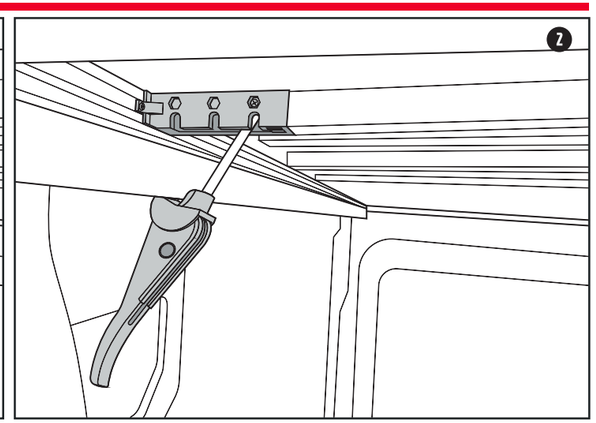

1. Place jaw under bed rail clip. **2.** Rotate latch handle downward. Make sure the latch is tight and secured.

SECURE & TIGHTEN BUCKLE

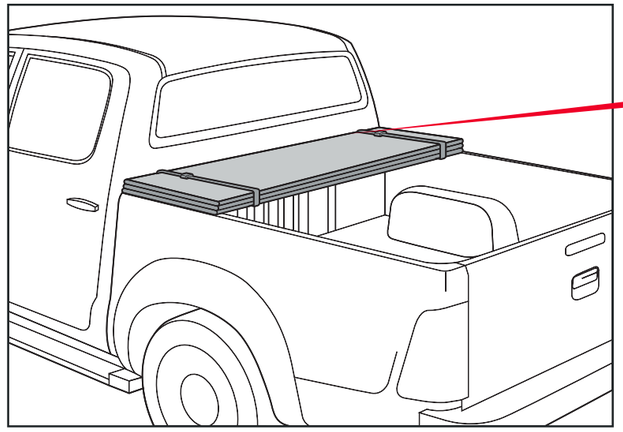

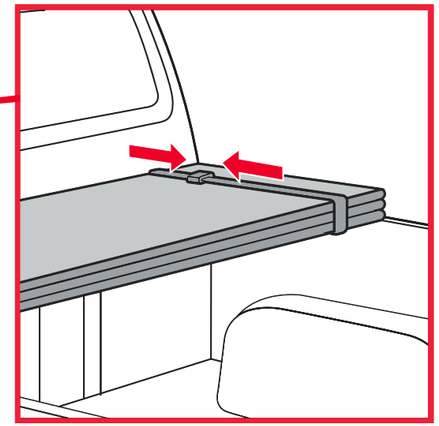

When folded, secure buckle, and tighten safety straps

LATCH POSITION CHANGE

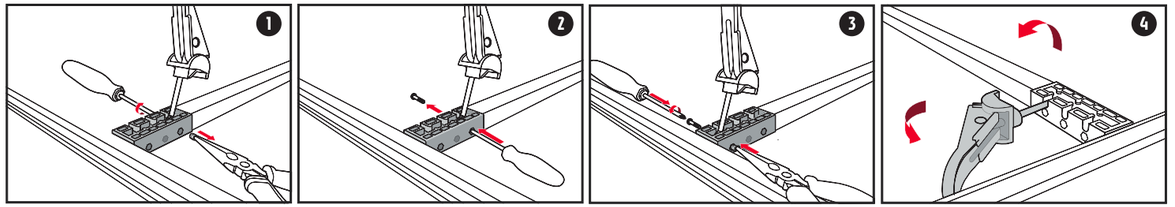

1. Remove using a #2 Phillips screw driver and needle nose pliers to pull out nut. **2.** Push screw out with the tip of the screw driver.
3. Move latch to new position. Place screw & nut in new positions holes. Make sure the screw is holding latch in place and tighten.
4. When folding the cover open, place the latch down in nested position. Failure to do so may result in damage to the tarp.

RAIL MOUNT BRACKET *Use if your vehicle has a utility track.

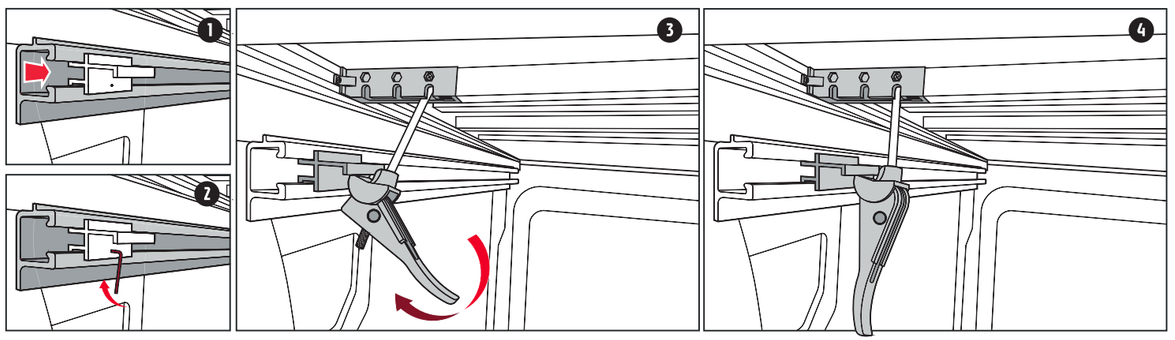

1. Insert bracket into utility track **2.** Tighten set screw with supplied Allen hex once the bracket is in the correct position.
3. Rotate latch handle downward to engage latch. **4.** Make sure the latch is tight and secured.

trailfortress.com/rough-country-soft-tri-fold-bed-cover-41207550a