TRAIL FORTRESS

BUILT FOR THE TRAIL. CHECKED FOR YOUR TRUCK.

Rough Country 31002 Installation Instructions

Track Bar Relocation Bracket for Ram 2500 4WD (2008–2013)

Part number: 31002

trailfortress.com/track-bar-relocation-bracket-ram-2500-4wd-rough-country-31002

Scan for fitment, price and install help

ROUGH COUNTRY
SUSPENSION SYSTEMS®

Dodge 08-13 2500/3500 Track Bar Relocation Bracket

Thank you for choosing Rough Country for your off road needs.

Please read all the instructions before beginning the installation.

PRODUCT USE INFORMATION

We will be happy to answer any questions regarding our products by calling us @ 800-222-7023 .Rough Country will not be responsible for any product that is altered.

KIT CONTENTS

1-Track Rod Bracket
1-31002BAG CONTAINING
- **1-16mm x 80mm Bolt**
- **1-14mm x 30mm Bolt**
- **1-14mm Nylock Nut**
- **1-16mm Flat Washer**
- **2-14mm Flat Washers**



TOOLS NEEDED

Drill Motor
19/32" Drill
15mm Wrench
18mm Socket/Wrench
21mm Socket/Wrench
Torque Wrench

INSTALLATION INSTRUCTIONS

1. Use a jack to lift the tires off of the ground and place jack stands under each side of the axle. Remove the wheels and tires.
2. Using a 21mm, remove the track bar mounting bolt from the axle mount. Also, remove the stabilizer mounting bolt using a 18mm socket and 15mm wrench. **See Photos 1 & 2**. **Retain the stabilizer bolt for reuse.**

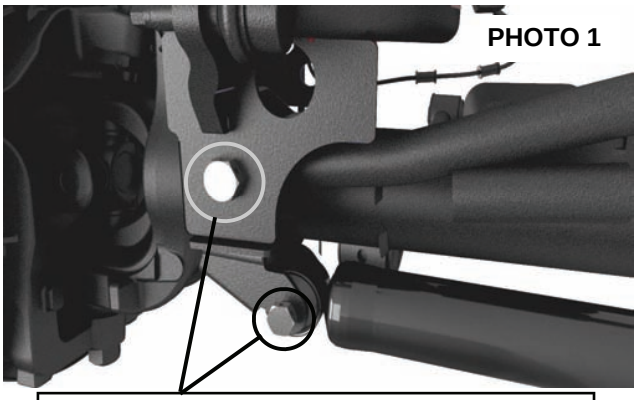

PHOTO 1

Remove track bar and stab bolts.

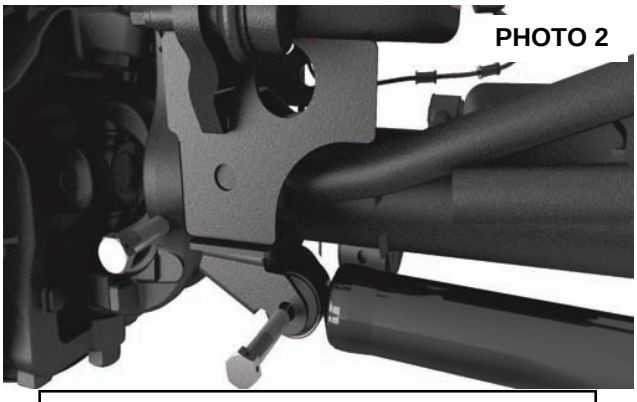

PHOTO 2

Remove track bar and stab bolts.

3. Remove the track bar from the bracket on the axle. It may be necessary to lift the axle from the jack stand and lower the passenger side of the axle.
4. Swing the stabilizer down out of the way of the axle bracket.