TRAIL FORTRESS

BUILT FOR THE TRAIL. CHECKED FOR YOUR TRUCK.

Rough Country 31002 Installation Instructions

Track Bar Relocation Bracket for Ram 2500 4WD (2008–2013)

Part number: 31002

trailfortress.com/track-bar-relocation-bracket-ram-2500-4wd-rough-country-31002

Scan for fitment, price and install help

ROUGH COUNTRY
SUSPENSION SYSTEMS®

Dodge 08-13 2500/3500 Track Bar Relocation Bracket

Thank you for choosing Rough Country for your off road needs.

Please read all the instructions before beginning the installation.

PRODUCT USE INFORMATION

We will be happy to answer any questions regarding our products by calling us @ 800-222-7023 .Rough Country will not be responsible for any product that is altered.

KIT CONTENTS

1-Track Rod Bracket
1-31002BAG CONTAINING
- **1-16mm x 80mm Bolt**
- **1-14mm x 30mm Bolt**
- **1-14mm Nylock Nut**
- **1-16mm Flat Washer**
- **2-14mm Flat Washers**



TOOLS NEEDED

Drill Motor
19/32" Drill
15mm Wrench
18mm Socket/Wrench
21mm Socket/Wrench
Torque Wrench

INSTALLATION INSTRUCTIONS

1. Use a jack to lift the tires off of the ground and place jack stands under each side of the axle. Remove the wheels and tires.
2. Using a 21mm, remove the track bar mounting bolt from the axle mount. Also, remove the stabilizer mounting bolt using a 18mm socket and 15mm wrench. **See Photos 1 & 2**. **Retain the stabilizer bolt for reuse.**

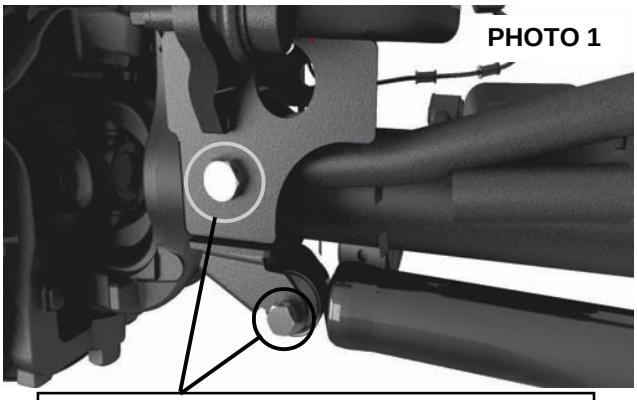

PHOTO 1

Remove track bar and stab bolts.

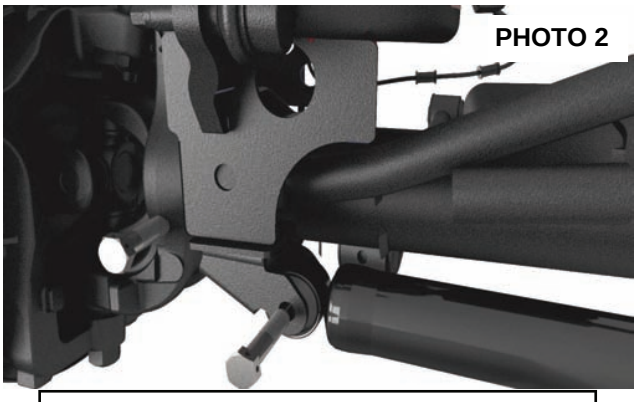

PHOTO 2

Remove track bar and stab bolts.

3. Remove the track bar from the bracket on the axle. It may be necessary to lift the axle from the jack stand and lower the passenger side of the axle.
4. Swing the stabilizer down out of the way of the axle bracket.

5. Place the supplied track bar bracket over the factory bracket. Using the new bracket as a guide, drill the factory bracket using a 19/32" drill. **See Photo 3.**
6. Place the track bar back into the axle bracket.
7. Install the supplied 14mm x 80mm bolt and washer through the new bracket reusing the factory flag nut. Use the factory bolt through the stabilizer. **Do Not Tighten at this time. See Photo 4.**



PHOTO 3

Drill using 19/32" drill.

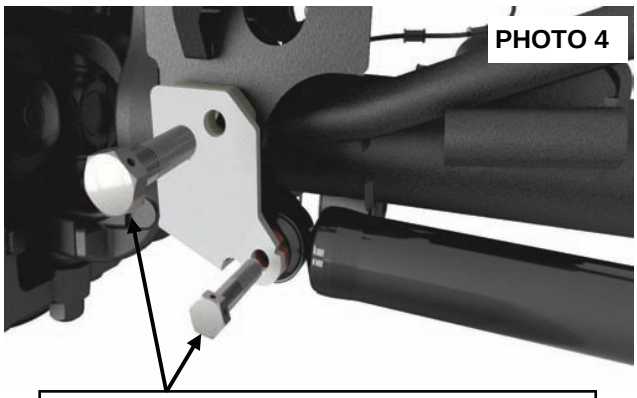

PHOTO 4

Install track bar and stab bolts.

8. Use the supplied 14mm x 30mm bolt and flat washers and nut on the bottom of the new track bar bracket. **See Photo 5.**
9. Torque all hardware to factory specs.
10. Replace wheels and tires and lower vehicle to the ground.



PHOTO 5

Install lower mounting bolt.

POST INSTALLATION

1. Check all fasteners for proper torque. Check to ensure there is adequate clearance between all rotating, mobile, fixed and heated members. Check steering for interference and proper working order.
2. Re torque all fasteners after 500 miles. Visually inspect components and re torque fasteners during routine vehicle service.

By purchasing any item sold by Rough Country, LLC, the buyer expressly warrants that he/she is in compliance with all applicable , State, and Local laws and regulations regarding the purchase, ownership, and use of the item. It shall be the buyers responsibility to comply with all Federal, State and Local laws governing the sales of any items listed, illustrated or sold. The buyer expressly agrees to indemnify and hold harmless Rough Country, LLC for all claims resulting directly or indirectly from the purchase, ownership, or use of the items.