TRAIL FORTRESS

BUILT FOR THE TRAIL. CHECKED FOR YOUR TRUCK.

Rough Country 21013 Installation Instructions

Steel Oval Nerf Step Bars with 4.5-Inch Step Area

Part number: 21013

trailfortress.com/rough-country-oval-nerf-step-21013

Scan for fitment, price and install help

ROUGH COUNTRY SUSPENSION SYSTEMS

21013

PARTS LIST:

1	Driver/Left Sidebar
1	Passenger/Right Sidebar
2	Driver/Left Mounting Brackets
2	Passenger/Right Mounting Brackets
8	8mm Clip Nuts
16	8-1.25mm x 30mm Hex Bolts
8	8-1.25mm x 25mm Hex Bolts
32	8mm ID x 24mm OD x 2mm Flat Washers
24	8mm Lock Washers
8	8mm Hex Nuts



Complete Installation

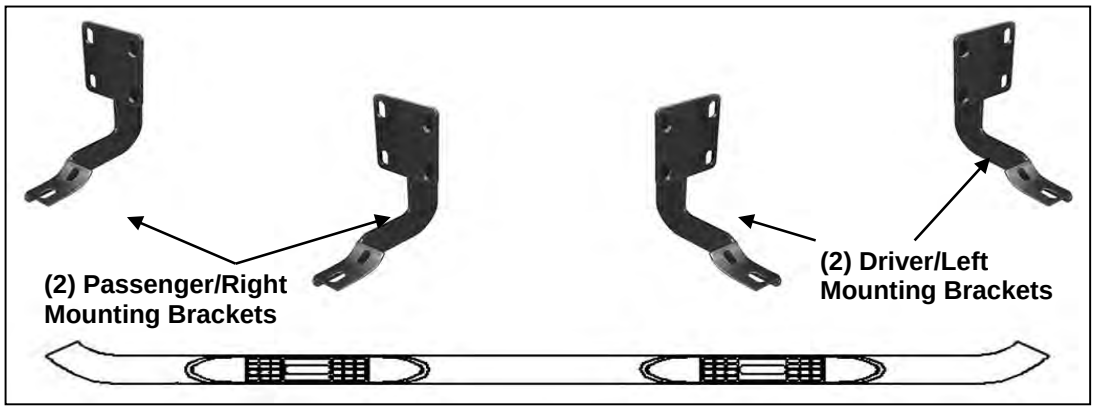

Driver/Left Sidebar illustrated

PROCEDURE:

1. **REMOVE CONTENTS FROM BOX. VERIFY ALL PARTS ARE PRESENT. READ INSTRUCTIONS CAREFULLY BEFORE STARTING INSTALLATION.**
2. Starting on the driver side-front of the vehicle, locate the 2nd set of factory holes in the body panel and pinch weld directly under the center of the front door. Each mounting location comprises of a rectangular hole with a round hole on each side and two holes through the pinch weld, **(Figures 1 & 2)**.
3. Select (2) 8mm Clip Nuts. Insert Clip Nuts one at a time into the rectangular opening and slide the threaded hole outward towards the round hole. Line up the threaded hole in the Clip with the round hole next to the rectangular opening. **NOTE**: Threaded nut must go towards the inside of the side panel, **(Figures 1 & 2)**.
4. Partially attach the passenger side front Mounting Bracket to the Clip Nuts using the included (2) 8mm x 30mm Hex Bolts, (2) 8mm Lock Washers and (2) 8mm Flat Washers, **(Figure 3)**. **NOTE:** Cradles on the Mounting Brackets should face the front of the vehicle.
5. Bolt the (2) bottom holes in the Mounting Bracket to the (2) holes in the pinch weld using the included (2) 8mm x 30mm Hex Bolts, (2) 8mm Lock Washers, (4) 8mm Flat Washers and (2) 8mm Hex Nuts, **(Figure 3)**. Do not tighten hardware at this time.
6. Repeat **Steps 2 – 5** for rear Mounting Bracket installation. **NOTE**: If you re not sure which sets of

trailfortress.com/rough-country-oval-nerf-step-21013

mounting holes to use, (last set along cab), hold the driver Sidebar up in the approximate location and line up the threaded inserts on the Sidebar with the holes in the pinch weld to determine the correct mounting location.

7. Carefully unwrap and position the Sidebar onto the (2) Mounting Brackets. Bolt the Sidebar to the Brackets with (4) 8mm x 25mm Hex Bolts, (4) 8mm Lock Washers, and (4) 8mm Flat Washers, **(Figures 3 & 4)**. Do not tighten at this time.
8. Level and adjust Sidebar properly and tighten all hardware.
9. Repeat **Steps 2 – 8** for passenger Sidebar installation.
10. Do periodic inspections to the installation to make sure that all hardware is secure and tight.

To protect your investment, wax this product after installing. Regular waxing is recommended to add a protective layer over the finish. Do not use any type of polish or wax that may contain abrasives that could damage the finish.

For gloss black finishes: Mild soap may be used to clean the Sidebar.

Driver Side Installation Pictured

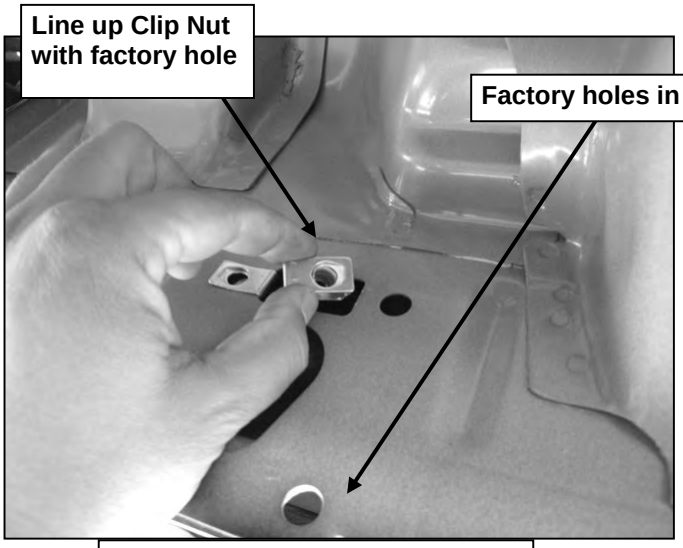

(Fig 1) Typical Mounting Location

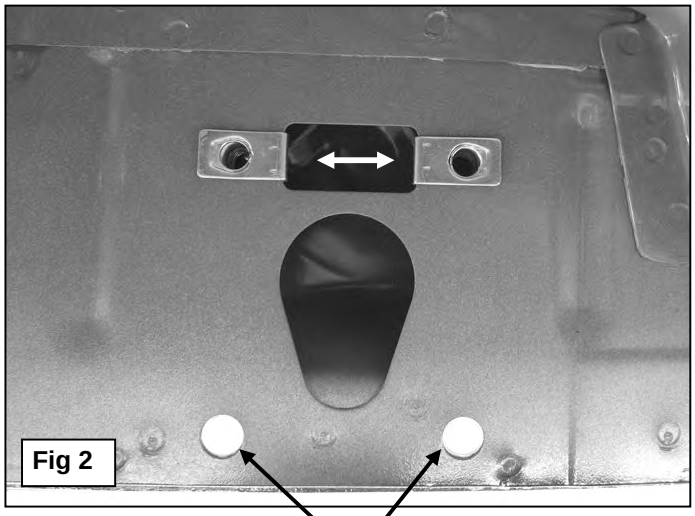

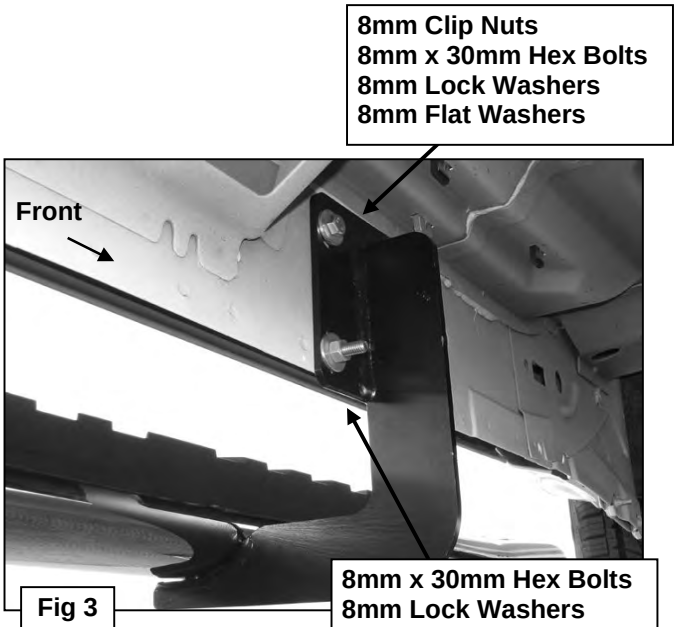

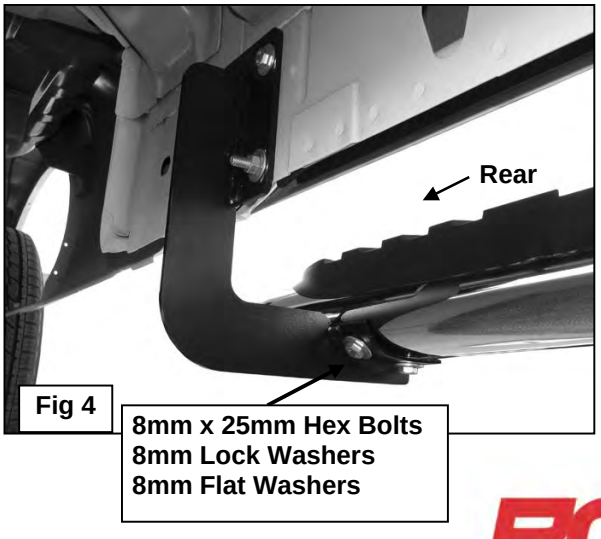

trailfortress.com/rough-country-oval-nerf-step-21013