TRAIL FORTRESS

BUILT FOR THE TRAIL. CHECKED FOR YOUR TRUCK.

Rough Country 21011 Installation Instructions

Oval Nerf Step Side Steps for Ford Bronco 4WD (2021-2025)

Part number: 21011

trailfortress.com/rough-country-oval-nerf-step-21011

Scan for fitment, price and install help

ROUGH COUNTRY SUSPENSION SYSTEMS®

21011

PARTS LIST:

1	Driver/Left Sidebar	12	10mm x 30mm Hex Bolts
1	Passenger/Right Sidebar	12	10mm Lock Washers
2	Front Mounting Brackets	12	10mm x 27mm OD x 3mm Flat Washers
4	Center/Rear Mounting Brackets	12	8mm x 25mm Combo Bolts

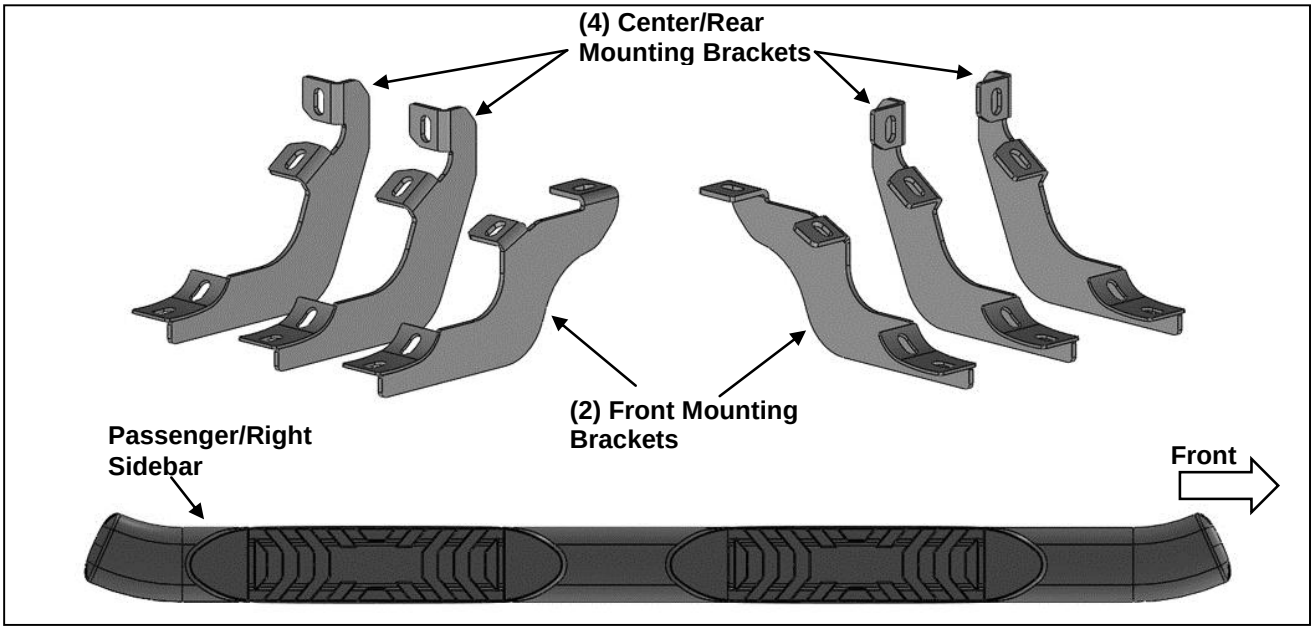

PROCEDURE:

1. **REMOVE CONTENTS FROM BOX. VERIFY ALL PARTS ARE PRESENT. READ INSTRUCTIONS CAREFULLY BEFORE STARTING INSTALLATION.**
2. Starting from underneath the Passenger/Right body panel, locate the front mounting location and the threaded holes in the body panel, **(Figure 1)**. Remove the plastic plugs covering the holes.
3. Select the Passenger/Right Front Mounting Bracket. Attach the Mounting Bracket to the front location with (2) 10mm Hex Bolts, (2) 10mm Lock Washers and (2) 10mm Flat Washers, **(Figure 2)**. Do not tighten hardware.
4. Repeat **Steps 2 & 4** to attach (2) Center/Rear Mounting Brackets to the center and rear locations, **(Figures 3—5)**. Do not tighten hardware.
5. Select the Passenger/Right Sidebar. Place the Sidebar onto the cradles of the Mounting Brackets. **IMPORTANT:** Do not rotate or slide the Sidebar front to back or damage to the finish may result. Attach the Sidebar to the Mounting Brackets with (6) 8mm Combo Bolts, **(Figure 6)**. Do not tighten hardware.
6. Level and adjust the Sidebar and tighten all hardware.
7. Repeat **Steps 1—7** to attach the Driver/Left Sidebar.
8. Do periodic inspections to the installation to make sure that all hardware is secure and tight.

To protect your investment, Do not use any type of polish or wax that may contain abrasives that could damage the finish. Mild soap may be used to clean the Sidebars.

Passenger/Right side Installation Pictured

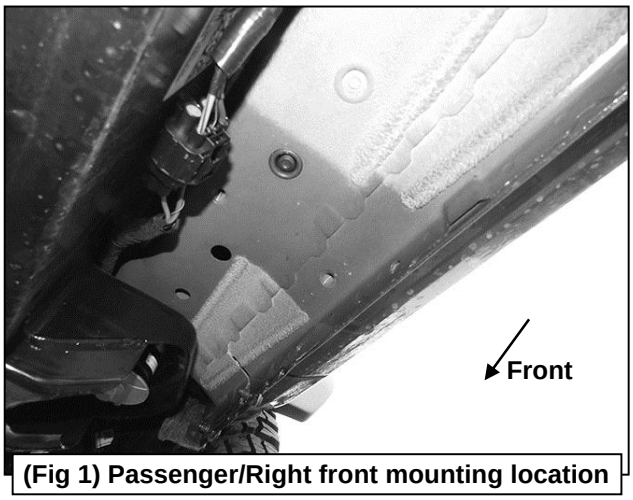

(Fig 1) Passenger/Right front mounting location

(2) 10mm Hex Bolts
(2) 10mm Lock Washers
(2) 10mm Flat Washers

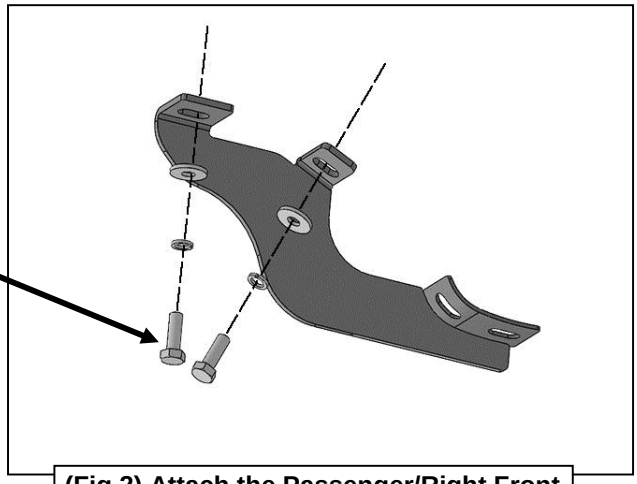

(Fig 2) Attach the Passenger/Right Front Mounting Bracket to the front location

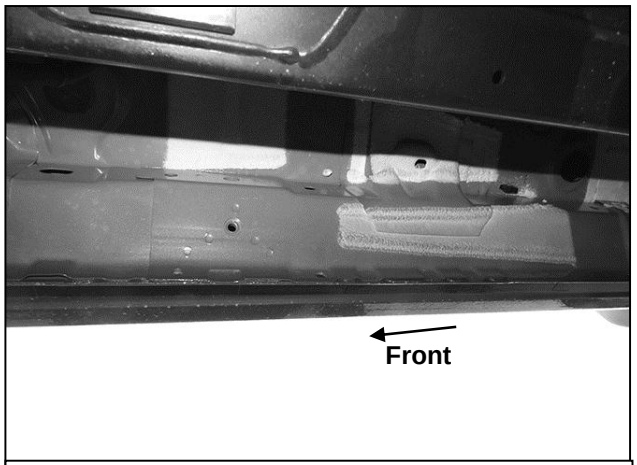

(Fig 3) Passenger/Right center mounting location

Passenger/Right side Installation Pictured

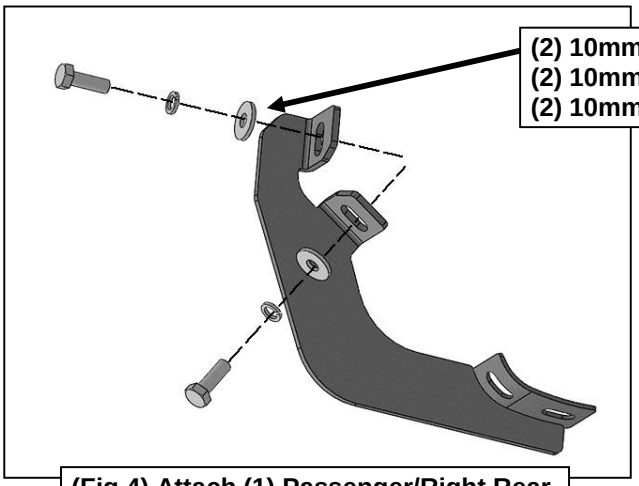

(Fig 4) Attach (1) Passenger/Right Rear Mounting Bracket to the center location

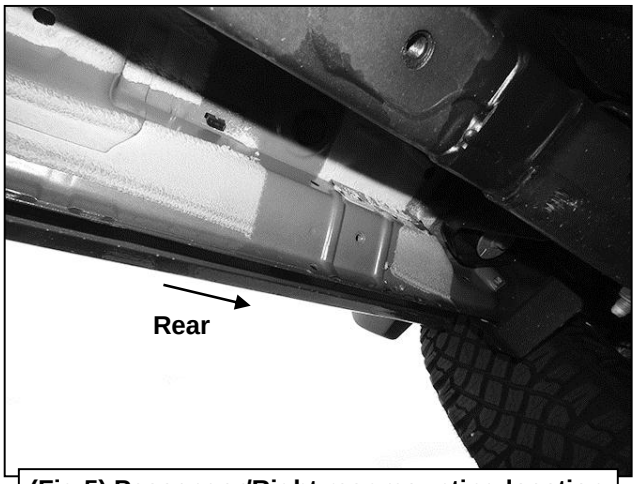

(Fig 5) Passenger/Right rear mounting location

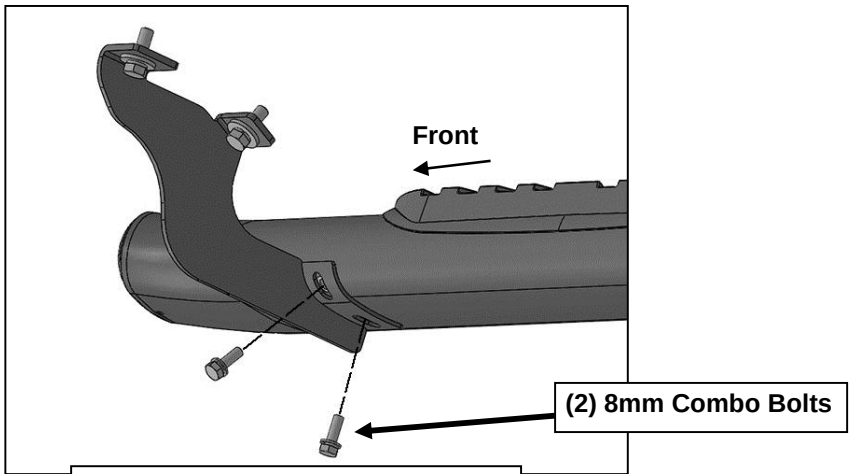

(Fig 6) Attach the Passenger/Right Sidebar to the Mounting Brackets