TRAIL FORTRESS

BUILT FOR THE TRAIL. CHECKED FOR YOUR TRUCK.

Rough Country 21006 Installation Instructions

Oval Nerf Steps for 2021–2025 Ford Bronco Sport AWD

Part number: 21006

trailfortress.com/rough-country-oval-nerf-steps-21006

Scan for fitment, price and install help

ROUGH COUNTRY SUSPENSION SYSTEMS®

21006

PARTS LIST:

1	Driver/Left 5inch Sidebar	2	10mm x 40mm Long Bolt Plate
1	Passenger/Right 5inch Sidebar	2	10mm x 40mm Short Bolt Plates
1	Driver/Left Front Mounting Bracket	8	10mm Spiral Bolts
1	Passenger/Right Front Mounting Bracket	2	10mm x 60mm Hex Bolts
1	Driver/Left Center Mounting Bracket	14	10mm x 27mm OD x 3mm Flat Washers
1	Passenger/Right Center Mounting Bracket	14	10mm Lock Washers
1	Driver/Left Rear Mounting Bracket	14	10mm Hex Nuts
1	Passenger/Right Rear Mounting Bracket	4	10mm Plastic Retainers
1	Driver/Left Center Support Bracket	12	8mm x 25mm Combo Bolts
1	Passenger/Right Center Support Bracket	8	8mm x 25mm Hex Bolts
2	Driver/Left Front/Rear Support Brackets	16	8mm x 24mm OD x 2mm Flat Washers
2	Passenger/Right Front/Rear Support Brackets	8	8mm Lock Washers
2	Compression Plates	8	8mm Hex Nuts

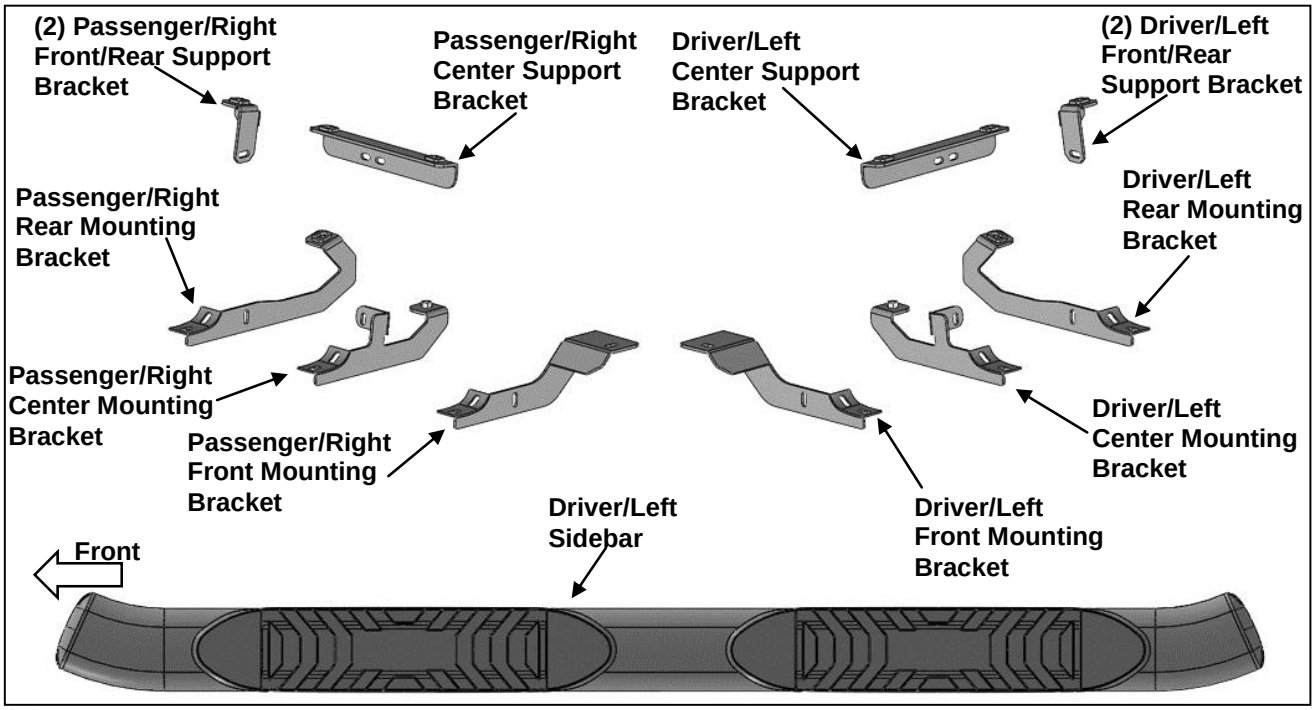

PROCEDURE:

1. **REMOVE CONTENTS FROM BOX. VERIFY ALL PARTS ARE PRESENT. READ INSTRUCTIONS CAREFULLY BEFORE STARTING INSTALLATION.**
2. Starting under the Driver/Left side of the vehicle, remove the large plastic cover on the bottom of the floor panel, **(Figure 1)**. Determine which plastic clips need to be removed. Carefully remove only the plastic clips for installation, **(Figures 2 &3)**.
3. Locate the front mounting location, **(Figure 4)**. Select (1) 10mm Spiral Bolt. Insert the Spiral Bolt into the side panel, **(Figures 5A & 5B)**. Select (1) 10mm Short Bolt Plate. Insert the Bolt Plate into the floor panel, **(Figure 6)**. Thread (1) 10mm Plastic Retainer onto the Bolt Plate to hold it in place.

a. Follow link for 10mm Spiral Bolt installation. https://youtu.be/BqQis3QjZNc

4. Select the Driver/Left Mounting Bracket. Attach the Mounting Bracket to the Bolt Plate with (1) 10mm Flat Washer, (1) 10mm Lock Washer and (1) 10mm Hex Nut, **(Figure 7)**. Do not tighten hardware.
5. Select (1) Driver/Left Front/Rear Support Bracket. Attach the Support Bracket to the Spiral Bolt with (1) 10mm Flat Washer, (1) 10mm Lock Washer and (1) 10mm Hex Nut, **(Figure 8)**. Attach the Support Bracket to the Mounting Bracket with (1) 8mm Hex Bolt, (2) 8mm Flat Washers, (1) 8mm Lock Washer and (1) 8mm Hex Nut, **(Figure 9)**. Do not tighten hardware.
6. Move to the center location, **(Figure 10)**. Insert (2) 10mm Spiral Bolts into the side panel, **(Figure 11)**. Select the Driver/Left Center Support Bracket. Attach the Bracket to the (2) Spiral Bolts with (2) 10mm Flat Washers, (2) 10mm Lock Washers and (2) 10mm Hex Nuts, **(Figure 12)**. Do not tighten hardware.
7. Select the Center Mounting Bracket. Attach the Mounting Bracket to the Support Bracket with (2) 8mm Hex Bolts, (4) 8mm Flat Washers, (2) 8mm Lock Washers and (2) 8mm Hex Nuts, **(Figure 13)**. Do not tighten hardware.
8. Select (1) Compression Plate.
   a. Thread (1) 10mm Hex Nut to (1) 10mm x 60mm Hex Bolt.
   b. Slide (1) 10mm Lock Washer and (1) 10mm Flat washer onto the 10mm Hex Bolt.
   c. Thread the 10mm Hex Bolt assembly into the welded nut on the back of the Mounting Bracket. Place the Compression Plate onto the end of the 10mm Hex Bolt, **(Figures 14A & 14B)**.
   d. Tighten Hex Bolt to place the Compression Plate onto the floor panel. Do not tighten Hex Bolt all the way. **NOTE:** Use the 10mm Hex Nut to adjust the level of the Mounting Bracket.
   e. Follow link for Compression Plate installation. https://youtu.be/R51s7Vk1Sy4

\

9. Move to the rear mounting location. Repeat **Steps 3—5** to attach the Driver/Left Rear Mounting Bracket and (1) Driver/Left Front/Rear Support Bracket, **(Figures 15—17)**. Do not tighten hardware.
10. Select the Driver/Left Sidebar. With assistance, place the Sidebar onto the cradles of the Mounting Brackets. **IMPORTANT:** Do not slide or rotate Sidebar or damage to the finish may result. Attach the Sidebar to the (3) Mounting Brackets with (6) 8mm Combo Bolts, **(Figure 18)**. Do not tighten hardware.
11. Level and adjust the Sidebar and tighten all hardware.
12. Do periodic inspections to the installation to make sure that all hardware is secure and tight.

To protect your investment, Do not use any type of polish or wax that may contain abrasives that could damage the finish. Mild soap may be used to clean the Sidebars.

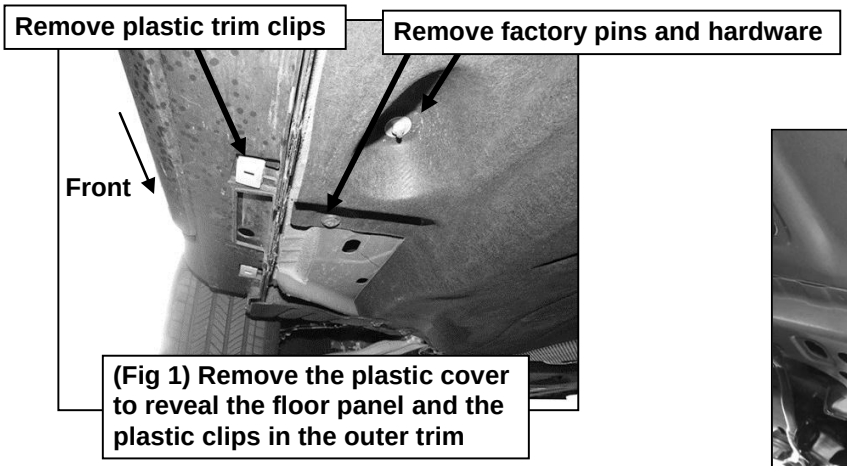

(Fig 1) Remove the plastic cover to reveal the floor panel and the plastic clips in the outer trim

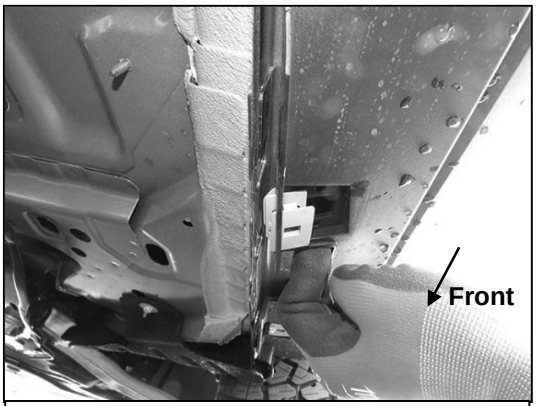

(Fig 2) Gently pull the trim slightly to loosen the clips (Passenger side shown)

trailfortress.com/rough-country-oval-nerf-steps-21006

Driver/Left Side Installation Pictured

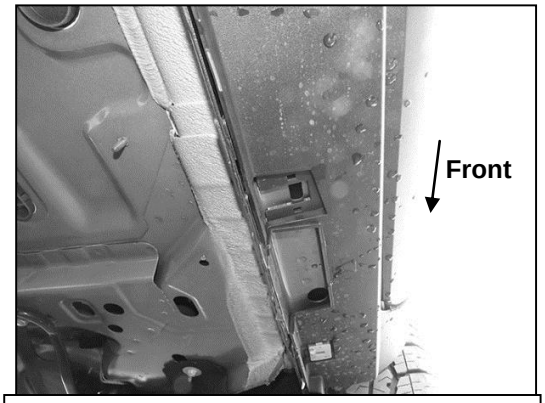

(Fig 3) Plastic clip removed from the front location trim (Passenger side shown)

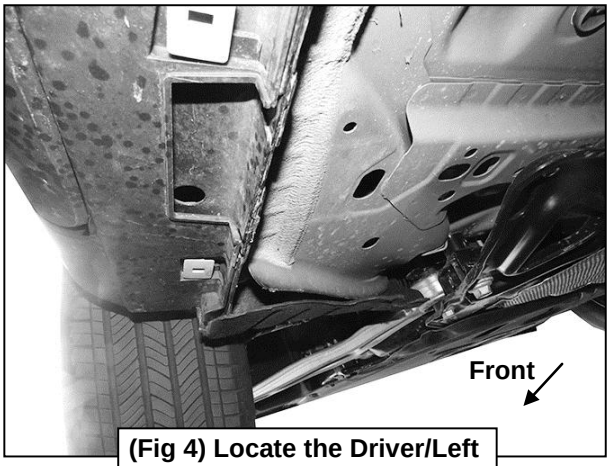

(Fig 4) Locate the Driver/Left front mounting location

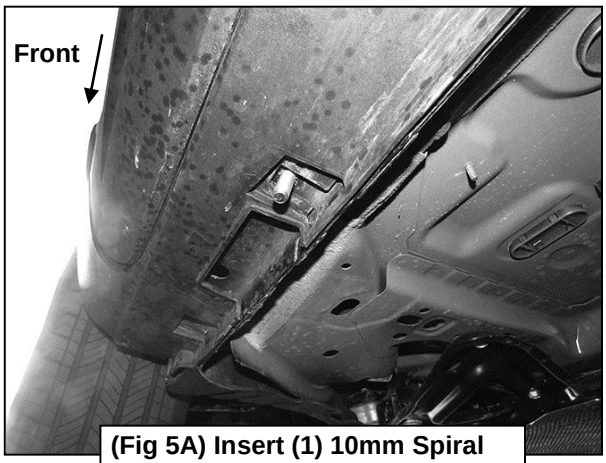

(Fig 5A) Insert (1) 10mm Spiral Bolt into the side panel

(Fig 5B) Follow link for 10mm Spiral Bolt installation.
https://youtu.be/BqQis3QjZNc

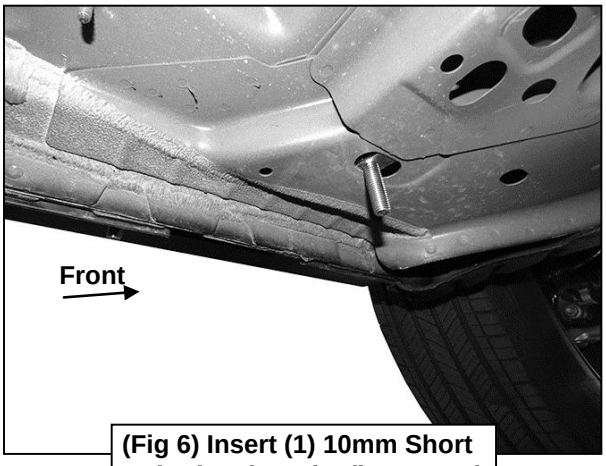

(Fig 6) Insert (1) 10mm Short Bolt Plate into the floor panel

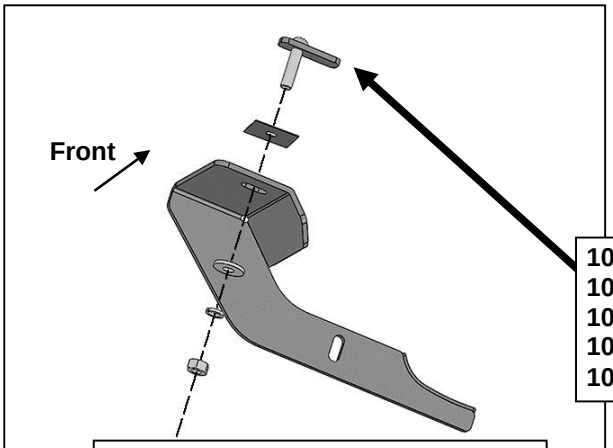

10mm Short Bolt Plate
10mm Plastic Retainer
10mm Flat Washer
10mm Lock Washer
10mm Hex Nut

(Fig 7) Attach the Driver/Left Front Mounting Bracket to the Bolt Plate

Driver/Left Side Installation Pictured

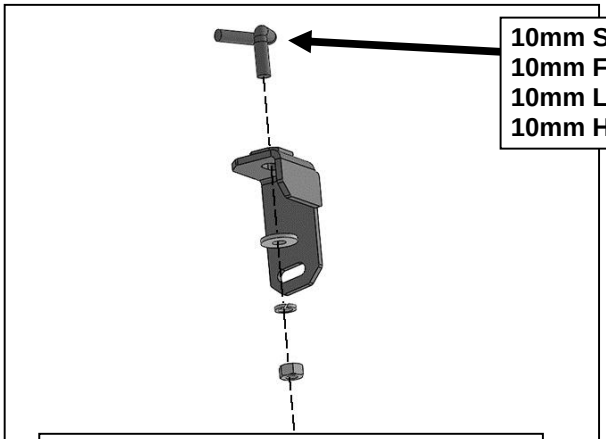

(Fig 8) Attach (1) Driver/Left Front/Rear Support Bracket to the Spiral Bolt

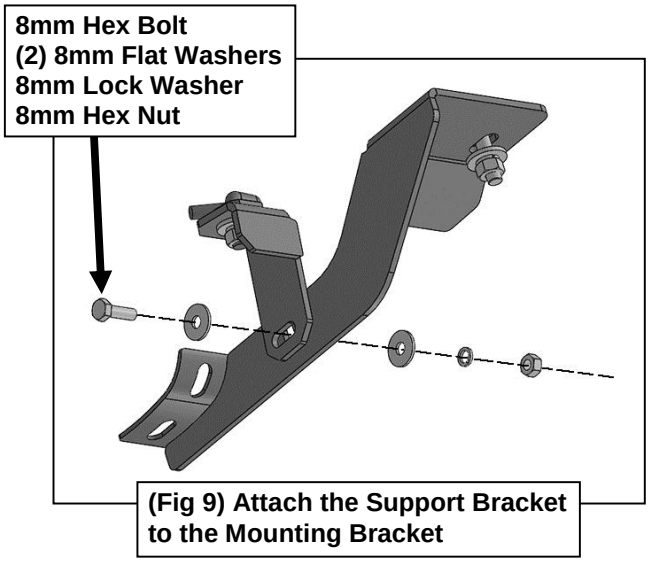

(Fig 9) Attach the Support Bracket to the Mounting Bracket

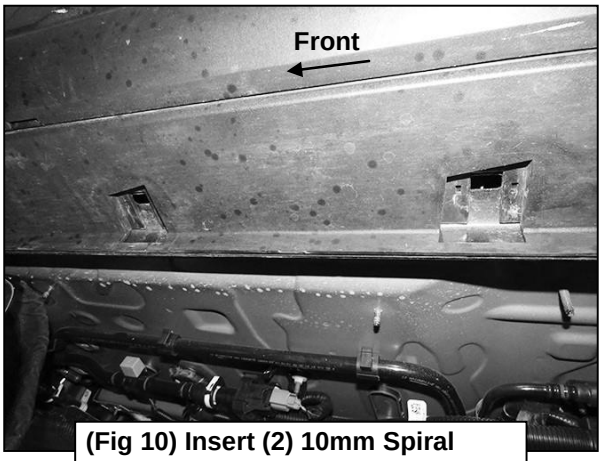

(Fig 10) Insert (2) 10mm Spiral Bolts into the outer center location

trailfortress.com/rough-country-oval-nerf-steps-21006

Driver/Left Side Installation Pictured

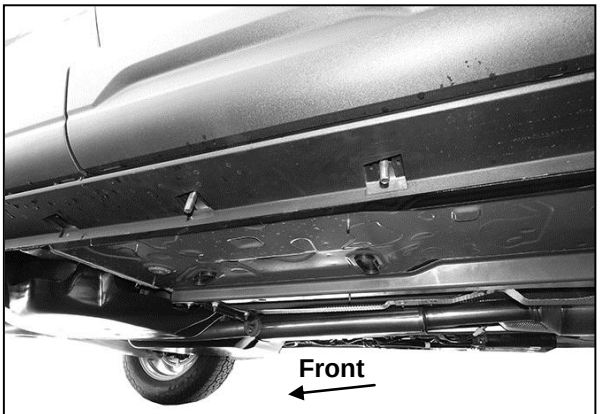

(Fig 11) (2) 10mm Spiral Bolts inserted into the outer center location

(2) 10mm Spiral Bolts
(2) 10mm Flat Washers
(2) 10mm Lock Washers
(2) 10mm Hex Nuts

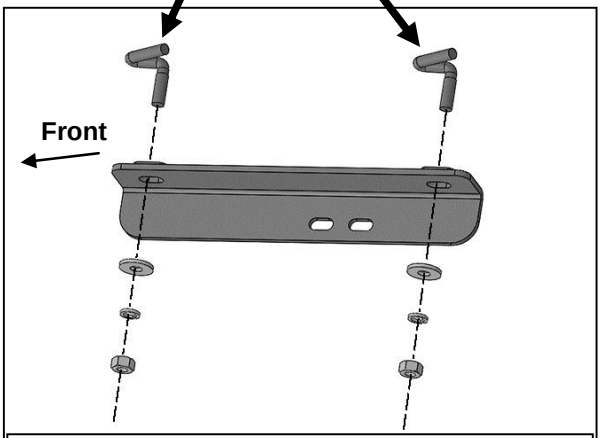

(Fig 12) Attach the Driver/Left Center Support Bracket to the (2) 10mm Spiral Bolts

(2) 8mm Hex Bolts
(4) 8mm Flat Washers
(2) 8mm Lock Washers
(2) 8mm Hex Nuts

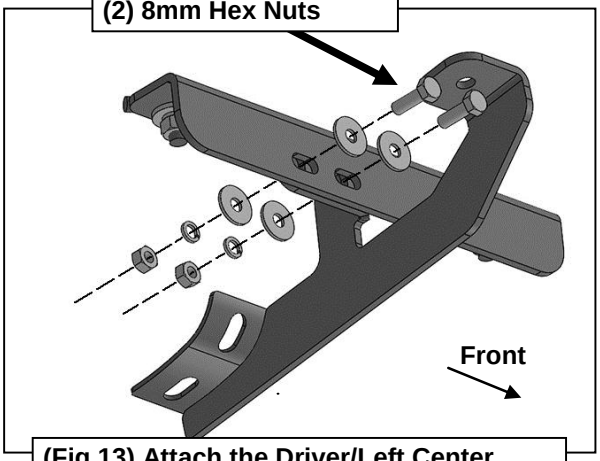

(Fig 13) Attach the Driver/Left Center Mounting Bracket to the Support Bracket

10mm x 60mm Hex Bolt
10mm Hex Nut
10mm Lock Washer
10mm Flat Washer
Compression Plate

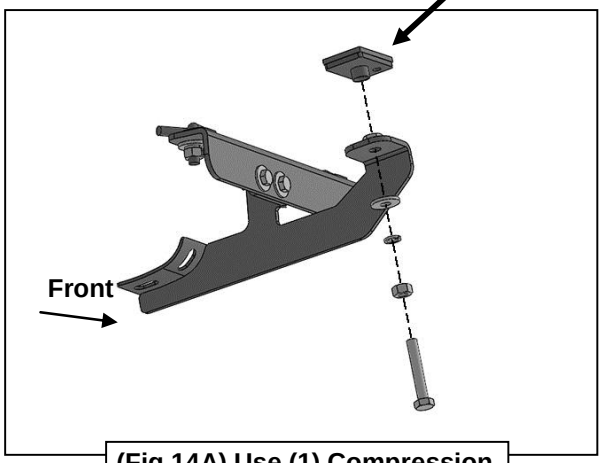

(Fig 14A) Use (1) Compression Plate to level the Bracket (Note use the Hex Nuts as adjusters)

(Fig 14B) Follow link for Compression Plate installation. https://youtu.be/R51s7Vk1Sy4

Driver/Left Side Installation Pictured

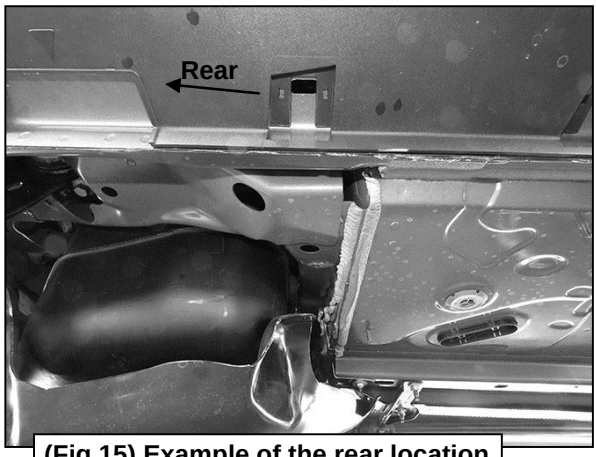

(Fig 15) Example of the rear location (Passenger side shown)

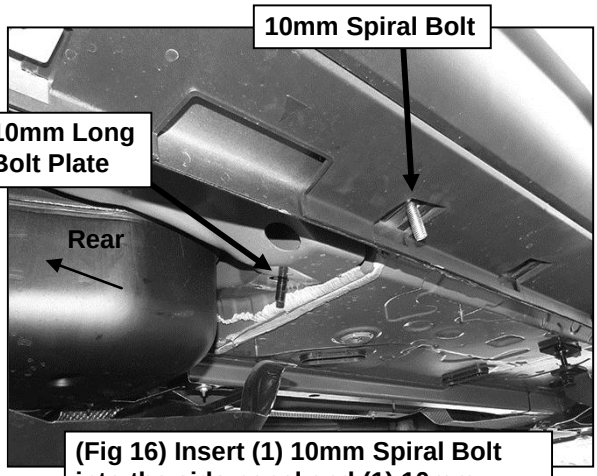

(Fig 16) Insert (1) 10mm Spiral Bolt into the side panel and (1) 10mm Long Bolt Plate into the floor panel

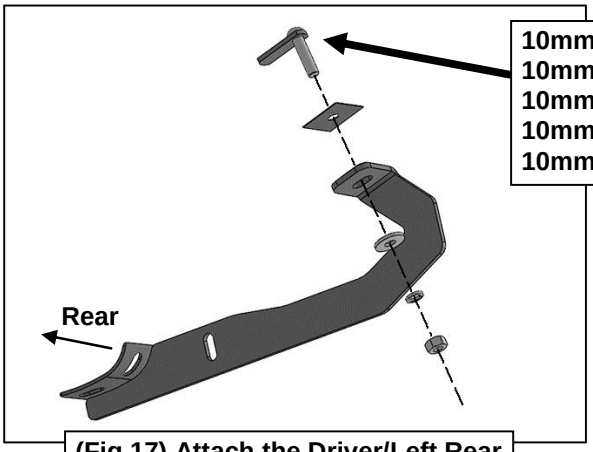

(Fig 17) Attach the Driver/Left Rear Mounting Bracket to the Bolt Plate

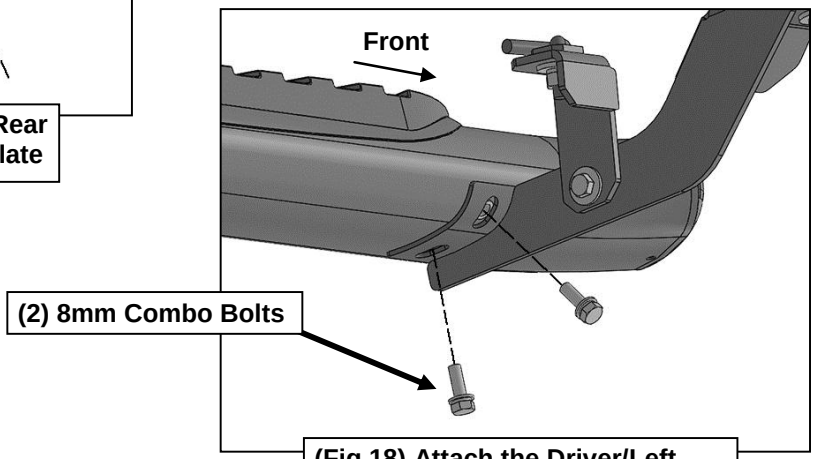

(Fig 18) Attach the Driver/Left Sidebar to the Mounting Brackets